ESC8000-E11P

4U Rackmount Server
User Guide

E26943
Revised Edition V6
September 2025

Copyright © 2025 ASUSTeK COMPUTER INC. All Rights Reserved.

No part of this manual, including the products and software described in it, may be reproduced, transmitted, transcribed, stored in a retrieval system, or translated into any language in any form or by any means, except documentation kept by the purchaser for backup purposes, without the express written permission of ASUSTeK COMPUTER INC. (“ASUS”).

ASUS provides this manual “as is” without warranty of any kind, either express or implied, including but not limited to the implied warranties or conditions of merchantability or fitness for a particular purpose. In no event shall ASUS, its directors, officers, employees, or agents be liable for any indirect, special, incidental, or consequential damages (including damages for loss of profits, loss of business, loss of use or data, interruption of business and the like), even if ASUS has been advised of the possibility of such damages arising from any defect or error in this manual or product.

Specifications and information contained in this manual are furnished for informational use only, and are subject to change at any time without notice, and should not be construed as a commitment by ASUS. ASUS assumes no responsibility or liability for any errors or inaccuracies that may appear in this manual, including the products and software described in it.

Product warranty or service will not be extended if: (1) the product is repaired, modified or altered, unless such repair, modification of alteration is authorized in writing by ASUS; or (2) the serial number of the product is defaced or missing.

Products and corporate names appearing in this manual may or may not be registered trademarks or copyrights of their respective companies, and are used only for identification or explanation and to the owners’ benefit, without intent to infringe.

Contents

Safety information ..... **viii**
About this guide ..... **x**

Chapter 1: Product Introduction

1.1 System package contents **1-2**
1.2 Serial number label **1-3**
1.3 System specifications **1-4**
1.4 Front panel features **1-7**
1.5 Rear panel features **1-7**
1.6 Base unit SKU options **1-8**
1.6.1 Support for 5 PCIe + 4 NVMe 1-8
1.6.2 Support for 4 PCIe + 1 OCP3.0 1-8
1.7 Internal features **1-9**
1.8 LED information **1-10**
1.8.1 Front panel LEDs 1-10
1.8.2 Rear panel LEDs 1-11
1.8.3 LAN (RJ-45) LEDs 1-12
1.8.4 Storage device status LEDs 1-13

Chapter 2: Hardware Setup

2.1 Chassis cover **2-2**
2.2 Air ducts **2-7**
2.3 Central Processing Unit (CPU) **2-9**
2.3.1 Installing the CPU and heatsink 2-9
2.4 System memory **2-12**
2.4.1 Overview 2-12
2.4.2 Memory configurations 2-13
2.4.3 Installing a DIMM 2-14
2.4.4 Removing a DIMM 2-15
2.5 Storage devices **2-16**
2.5.1 Installing a 3.5-inch storage device 2-16
2.5.2 Installing a 2.5-inch storage device 2-18

Contents

2.6 Expansion slots.....2-19

2.6.1 Installing an expansion card to the front PCIe expansion card bracket (on select models).....2-19

2.6.2 Installing an ASUS PIKE II or RAID card.....2-21

2.6.3 Installing the Cache Vault Power Module.....2-23

2.6.4 Installing an expansion card to the rear PCIe expansion card slots (on select models).....2-25

2.6.5 Installing an OCP 3.0 card to the rear OCP 3.0 socket board (on select models).....2-26

2.6.6 Installing the PFR module (optional).....2-26

2.7 Cable connections.....2-28

2.7.1 NVMe/SATA/SAS backplane.....2-28

2.7.2 GPU SKU board.....2-29

2.8 GPU fans.....2-30

2.9 System fans.....2-31

2.10 Redundant power supply units.....2-32

2.11 GPU cards.....2-33

2.12 GPU bridges.....2-36

2.13 Motherboard.....2-37

2.13.1 Removing the motherboard.....2-37

2.13.2 Installing the motherboard.....2-38

2.14 CMOS battery.....2-39

2.15 Rail kit options.....2-40

Chapter 3: Motherboard Information

3.1 Motherboard layout.....3-2

3.2 Central Processing Unit (CPU).....3-4

3.3 Dual Inline Memory Module (DIMM).....3-4

3.4 Jumpers.....3-5

3.5 Internal connectors.....3-6

3.6 Onboard LEDs.....3-10

Contents

Chapter 4: BIOS Setup

4.1 Managing and updating your BIOS 4-2

4.1.1 ASUS CrashFree BIOS 3 utility 4-2

4.1.2 ASUS EZ Flash Utility 4-3

4.2 BIOS setup program 4-4

4.2.1 BIOS menu screen 4-5

4.2.2 Menu bar 4-5

4.3 Main menu 4-7

4.4 Performance Tuning menu 4-8

4.5 Advanced menu 4-10

4.5.1 Trusted Computing 4-10

4.5.2 ACPI Settings 4-11

4.5.3 Redfish Host Interface Settings 4-11

4.5.4 Onboard LAN Configuration 4-11

4.5.5 Serial Port Console Redirection 4-12

4.5.6 SIO Configuration 4-15

4.5.7 PCI Subsystem Settings 4-16

4.5.8 USB Configuration 4-17

4.5.9 Network Stack Configuration 4-18

4.5.10 NVMe Configuration 4-19

4.5.11 APM Configuration 4-20

4.5.12 T1s Auth Configuration 4-21

4.5.13 Third-party UEFI driver configurations 4-22

4.6 Platform Configuration menu 4-23

4.6.1 PCH-IO Configuration 4-24

4.6.2 Miscellaneous Configuration 4-24

4.6.3 Server ME Configuration 4-25

4.6.4 Runtime Error Logging Support 4-26

Contents

4.7 Socket Configuration menu 4-27
4.7.1 Processor Configuration 4-28
4.7.2 Common RefCode Configuration 4-33
4.7.3 Uncore Configuration 4-33
4.7.4 Memory Configuration 4-34
4.7.5 IIO Configuration 4-35
4.7.6 Advanced Power Management Configuration 4-36
4.8 Security menu 4-37
4.9 Boot menu 4-39
4.10 Tool menu 4-40
4.11 Event Logs menu 4-41
4.11.1 Change Smbios Event Log Settings 4-41
4.11.2 View Smbios Event Log 4-41
4.12 Server Mgmt menu 4-42
4.12.1 System Event Log 4-43
4.12.2 View FRU Information 4-43
4.12.3 BMC network configuration 4-43
4.12.4 View System Event Log 4-43
4.13 Save & Exit menu 4-44

Contents

Chapter 5: RAID Configuration

5.1 Setting up RAID 5-2
5.1.1 RAID definitions 5-2
5.1.2 Installing hard disk drives 5-2
5.1.3 RAID configuration utilities 5-2
5.2 Intel® Virtual Raid on CPU in BIOS 5-3
5.2.1 Creating a RAID set 5-4
5.2.2 Deleting a RAID set 5-5
5.3 Intel® Rapid Storage Technology enterprise (Windows) 5-6
5.3.1 Creating a RAID set 5-7
5.3.2 Changing a Volume Type 5-9
5.3.3 Deleting a volume 5-10
5.3.4 Preferences 5-11

Appendix

Block diagram A-2
Q-Code table A-2
Notices A-4
Service and Support A-10

Safety information

Electrical Safety

- Before installing or removing signal cables, ensure that the power cables for the system unit and all attached devices are unplugged.
- To prevent electrical shock hazard, disconnect the power cable from the electrical outlet before relocating the system.
- When adding or removing any additional devices to or from the system, ensure that the power cables for the devices are unplugged before the signal cables are connected. If possible, disconnect all power cables from the existing system before you add a device.
- If the power supply is broken, do not try to fix it by yourself. Contact a qualified service technician or your dealer.

Operation Safety

- Any mechanical operation on this server must be conducted by certified or experienced engineers.
- Before operating the server, carefully read all the manuals included with the server package.
- Before using the server, ensure all cables are correctly connected and the power cables are not damaged. If any damage is detected, contact your dealer as soon as possible.
- To avoid short circuits, keep paper clips, screws, and staples away from connectors, slots, sockets and circuitry.
- Avoid dust, humidity, and temperature extremes. Place the server on a stable surface.

This product is equipped with a three-wire power cable and plug for the user's safety. Use the power cable with a properly grounded electrical outlet to avoid electrical shock.

Restricted Access Area

This equipment should only be installed in a Restricted Access Area where both these conditions apply:

- Access can only be gained by skilled or instructed persons who have been instructed about the reasons for the restrictions applied to the area and about any precautions that shall be taken; and
- Access is through the use of a TOOL, or other means of security, and is controlled by the authority responsible for the area.

Lithium-Ion Battery Warning

CAUTION! Danger of explosion if battery is incorrectly replaced. Replace only with the same or equivalent type recommended by the manufacturer. Dispose of used batteries according to the manufacturer's instructions.

Heavy System

CAUTION! This server system is heavy. Ask for assistance when moving or carrying the system.

Shock Hazard

CAUTION! Risk of electric shock.
Disconnect all power supply input plugs before servicing.

About this guide

Audience

This user guide is intended for system integrators and experienced users with at least basic knowledge of configuring a server.

Contents

This guide contains the following parts:

1. **Chapter 1: Product Introduction**

   This chapter describes the general features of the server including sections on front panel and rear panel specifications.

2. **Chapter 2: Hardware Setup**

   This chapter lists the hardware setup procedures that you have to perform when installing or removing system components.

3. **Chapter 3: Motherboard Information**

   This chapter gives information about the motherboard that comes with the server. This chapter includes the motherboard layout, jumper settings, and connector locations.

4. **Chapter 4: BIOS Setup**

   This chapter tells how to change system settings through the BIOS Setup menus and describes the BIOS parameters.

5. **Chapter 5: RAID Configuration**

   This chapter provides instructions for setting up, creating, and configuring RAID sets using the available utilities.

Conventions

To ensure that you perform certain tasks properly, take note of the following symbols used throughout this manual.

DANGER/WARNING: Information to prevent injury to yourself when trying to complete a task.

CAUTION: Information to prevent damage to the components when trying to complete a task.

IMPORTANT: Instructions that you MUST follow to complete a task.

NOTE: Tips and additional information to help you complete a task.

Typography

Bold text	Indicates a menu or an item to select.
Italics	Used to emphasize a word or a phrase.
<Key>	Keys enclosed in the less-than and greater-than sign means that you must press the enclosed key. Example: <Enter> means that you must press the Enter or Return key.
<Key1>+<Key2>+<Key3>	If you must press two or more keys simultaneously, the key names are linked with a plus sign (+). Example: <Ctrl>+<Alt>+<Del>
`Command`	Means that you must type the command exactly as shown, then supply the required item or value enclosed in brackets. Example: At the command prompt, type the command line: `format A:/S`

References

Refer to the following sources for additional information, and for product and software updates.

1. **ASUS Control Center (ACC) user guide**

   This manual tells how to set up and use the proprietary ASUS server management utility.

2. **ASUS websites**

   The ASUS websites provide updated information for all ASUS hardware and software products. Visit https://www.asus.com for more information.

Product Introduction

1

This chapter describes the general features of the server. It includes sections on front panel and rear panel specifications.

1.1 System package contents

Check your system package for the following items.

	ESC8000-E11P
Chassis	ASUS 4U Rackmount Chassis
Motherboard	ASUS Z13PG-D32 Server Board
Accessory box	1 x ASMB11 Instruction Card 1 x ASUS Control Center Instruction Card 4 x AC Power Cables 16 x GPU Power Cables (6+2-pin) 8 x GPU Power Cables (8-pin) 8 x GPU Air Ducts (for Nvidia/AMD) 2 x CPU Heatsinks 2 x CPU Carriers
Optional Items	1 x Rail Kit 1 x Broadcom HBA Card Cable Kit 1 x ASUS PIKE Cable Kit 8 x 12VHPWR Power Cables

- If any of the above items is damaged or missing, contact your retailer.
- Optional items come bundled if you selected them when purchasing the system and cannot be bought separately.

1.2 Serial number label

Before requesting support from the ASUS Technical Support team, you must take note of the product's serial number containing 12 characters, such as xxSxxxxxxxxx. See the figure below.

With the correct serial number of the product, ASUS Technical Support team members can then offer a quicker and satisfying solution to your problems.

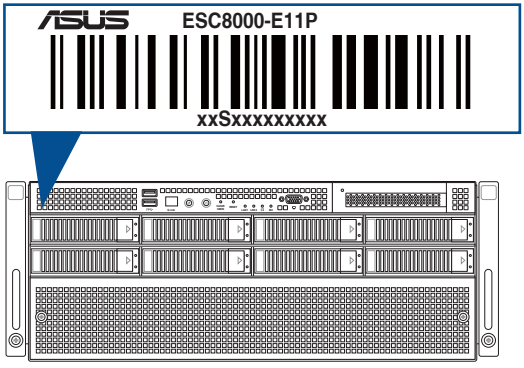

The serial number is printed on the Asset tag.

1.3 System specifications

The ASUS ESC8000-E11P server features the ASUS Z13PG-D32 server board. The server supports 4th Gen Intel® Xeon® Scalable Processors Family Series plus other latest technologies through the chipsets onboard.

Model Name		ESC8000-E11P
Motherboard		Z13PG-D32
Processor Support		2 x Socket (LGA 4677) 4th Gen Intel® Xeon® Scalable Processors Family (Up to 350W) UPI 16 GT/s
Core Logic		Intel® C741
Memory	Total Slots	32 (8-channel per CPU, 16 DIMM per CPU)
	Capacity	Maximum up to 8TB
	Memory Type	DDR5 4800/4400 RDIMM / 3DS RDIMM (2 DIMM per channel) * **Refer to ASUS server AVL for the latest update**
	Memory Size	64GB, 32GB, 16GB (RDIMM) 256GB, 128GB (RDIMM 3DS) * **Refer to ASUS server AVL for the latest update**
Expansion Slots	Total PCIe Slots	Up to 13 slots
	PCIe Slot Type	**Rear:** - 8 x PCIe (Gen5 x16 link, FH/FL) for single/dual-slot GPU cards - 3 x PCIe (Gen5 x16 link, FH/FL, FH/HL) for NIC cards - 1 x PCIe (Gen5 x16 link, FH/FL, FH/HL) for NIC cards or x16 OCP3.0 socket** **Front:** - 1 x PCIe (Gen5 x16 link LP/HL) for HBA/RAID cards * **NC-SI support needed for OCP3.0 and BlueField-2 cards** ** **OCP3.0 SKU available by request.**
	M.2	1 x M.2 socket 3 (Gen3 x4 link, up to 22110)
	MicroSD Card Slot	1 x for BMC image
Storage	SATA Controller	6Gbps SATA ports
	SAS Controller	**Optional kit(s):** - Broadcom MegaRAID card - ASUS PIKE II HBA card
	NVMe Controller	CPU integrated to support up to 8 NVMe devices

(continued on the next page)

Model Name		ESC8000-E11P
Storage Bays	Storage Bays	8 x 3.5”/2.5” Front Hot-swap Storage Bays - Backplane supports up to 8 x NVMe*/SATA/SAS** * **NVMe support on selected SKUs** ** **SAS support requires an optional HBA/RAID card**
	Backplane Connectors	8 x MCIO connectors for NVMe 2 x Mini SAS HD for 8 x SATA
	Motherboard Connectors	4 x MCIO connectors (x8 link) for PCIe slots or NVMe
	Default Cables	2 x backplane MCIO cables
Networking	LAN	1 x Dual Port Intel® I350 1GbE/X710-AT2 10GbE LAN controller 1 x Management Port
VGA		Aspeed AST2600 64MB
Graphic		Up to 8 double-deck GPU cards
Front I/O		2 x USB 3.2 Gen1 ports 1 x VGA port
Rear I/O		1 x COM port 2 x RJ-45 LAN ports 1 x RJ-45 management LAN port
Switch/LED		**Front:** 1 x Power switch/LED 1 x Location switch/LED 1 x Q-Code/Port 80 LED 1 x Clear CMOS switch 1 x Reset switch 2 x LAN LED 1 x Message LED 1 x M.2 LED **Rear:** 1 x Power switch/LED 1 x Location switch/LED
Security Options		TPM-SPI / PFR (Optional)
OS Support		Windows® Server, RedHat®, SuSE®, CentOS, Ubuntu, Vmware * **Refer to https://servers.asus.com/support/os for the latest supported OS list**
Management Solution	Out of Band Remote Hardware	Onboard ASMB11-iKVM
	Software	ASUS Control Center

(continued on the next page)

Model Name	ESC8000-E11P
Regulatory Compliance	BSMI, CB, CE, FCC, RCM, KCC (Class A)
Dimensions (HH x WW x DD)	800mm x 440 mm x 174.5 mm (4U)
Net Weight	27kg (excluding CPU, DRAM, and HDD)
Gross Weight	52kg (including packaging, excluding CPU, DRAM, and HDD)
Power Supply / Power Rating	2+2 Redundant 2600W/3000W 80 PLUS Titanium power supply 2+1 Redundant 3000W 80 PLUS Titanium power supply Rating: 220-240 Vac, 15.5A (x4), 50-60Hz
Environment	Operating temperature: 10°C ~ 35°C Non-operating temperature: -40°C ~ 70°C Non-operating humidity: 20% ~ 90% (Non-condensing)

Specifications are subject to change without notice.

1.4 Front panel features

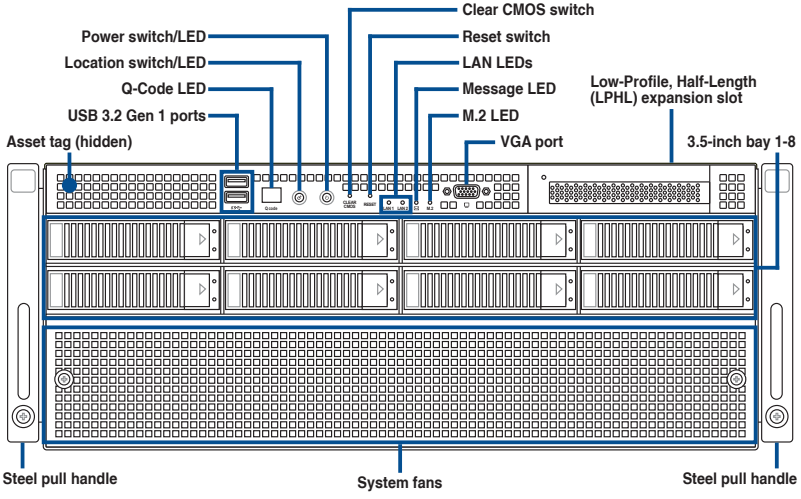

1.5 Rear panel features

The power sockets and ports are located on the rear panel of the server.

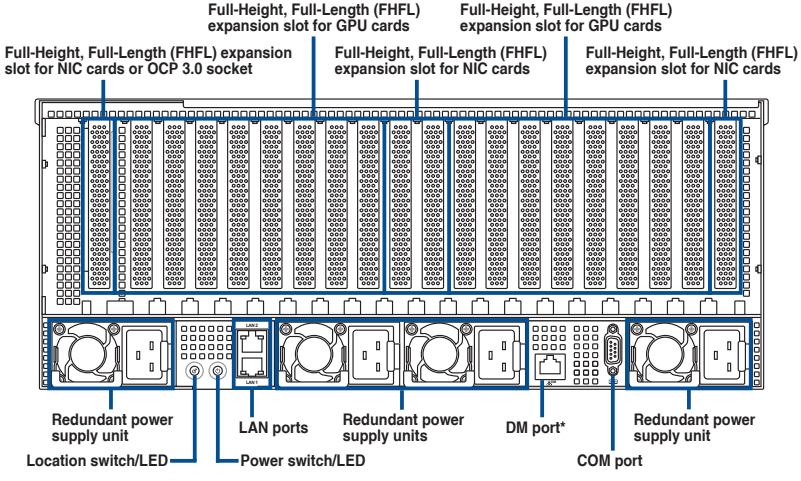

The DM (Dedicated Management) port is for ASUS ASMB11-iKVM only.

1.6 Base unit SKU options

In addition to support for eight dual-slot GPU expansion cards, the server also comes with expansion slots that are configured in different base unit SKUs to meet various expansion requirements.

1.6.1 Support for 5 PCIe + 4 NVMe

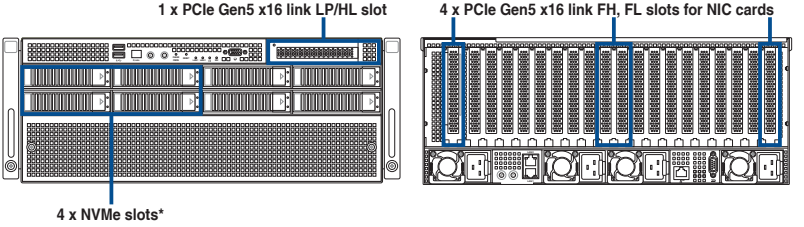

Additional 4 x NVMe support (for a total of 8 x NVMe) will occupy the front x16 PCIe slot.

1.6.2 Support for 4 PCIe + 1 OCP3.0

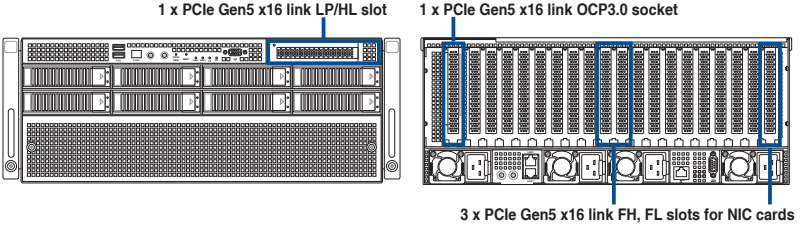

1.7 Internal features

The barebone server includes the basic components as shown.

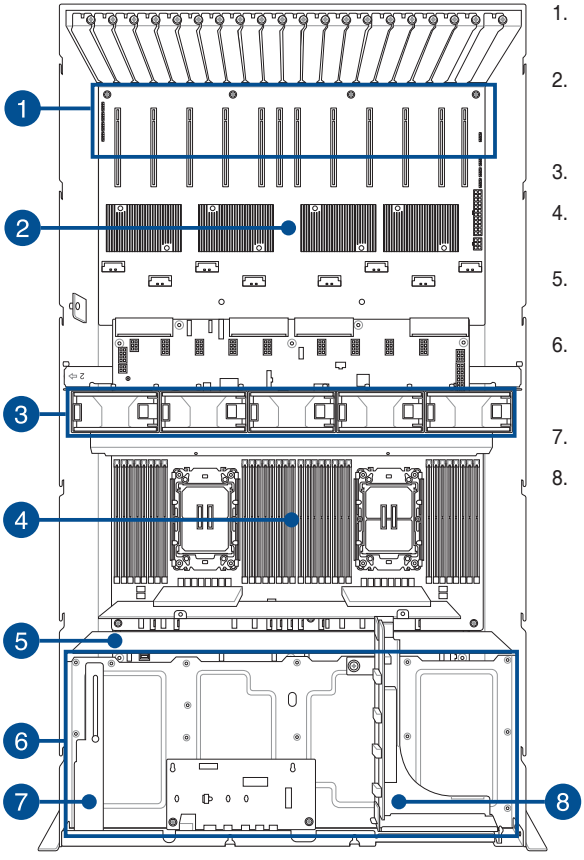

1. Redundant power supply units (hidden)
2. GPU SKU board with full-height/full-length PCIe expansion slots
3. GPU fans
4. ASUS Z13PG-D32 server board
5. NVMe/SATA/SAS backplane
6. 8 x 3.5-inch storage bays and system fans (hidden)
7. Asset tag (hidden)
8. PCIe riser card with low-profile/half-length slot

The barebone server does not include a floppy disk drive or an optical drive. Connect a USB floppy disk drive to any of the USB ports on the front or rear panel if you need to use a floppy disk.

A protection film is pre-attached to the front cover before shipping. Remove the protection film before turning on the system for sufficient heat dissipation.

WARNING

HAZARDOUS MOVING PARTS

KEEP FINGERS AND OTHER BODY PARTS AWAY

1.8 LED information

1.8.1 Front panel LEDs

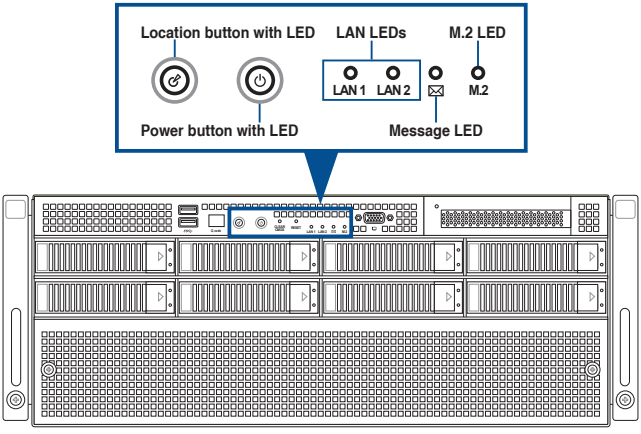

LED	Icon	Display status	Description
Power button with LED	⏻	ON	System power on
Location button with LED		ON	Location switch is pressed (Press the location switch again to turn off)
		OFF	Function off
LAN LEDs	1 2	ON	LAN connection is present
		Blinking	LAN is transmitting or receiving data
		OFF	No LAN connection
Message LED	✉	ON	A hardware monitor event is indicated
		OFF	System is normal; no incoming event
M.2 LED	**M.2**	Blinking	M.2 storage device reading or writing data

1.8.2 Rear panel LEDs

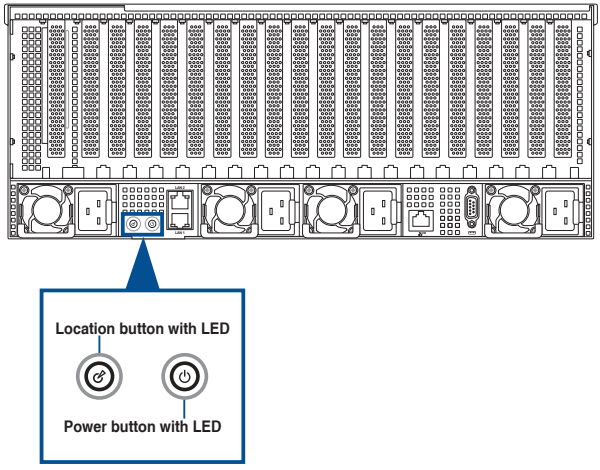

LED	Icon	Display status	Description
Power button with LED	⏻	ON	System power on
Location button with LED		ON	Location switch is pressed (Press the location switch again to turn off)
		OFF	Function off

1.8.3 LAN (RJ-45) LEDs

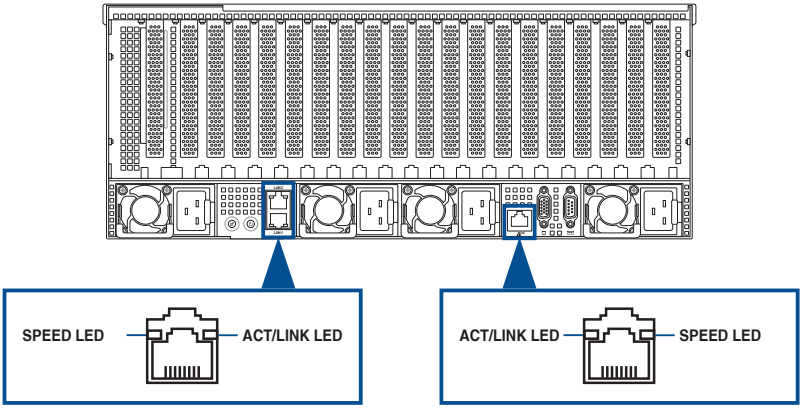

Intel® I350-AM4 1GbE LAN port LEDs

SPEED LED		ACT/LINK LED	
Status	Description	Status	Description
OFF	10 Mbps connection	OFF	No link
ORANGE	100 Mbps connection	GREEN	Linked
GREEN	1 Gbps connection	BLINKING	Data activity

Intel® X710-AT2 10GbE LAN port LEDs

SPEED LED		ACT/LINK LED	
Status	Description	Status	Description
OFF	100 Mbps connection	OFF	No link
ORANGE	1-5 Gbps connection	GREEN	Linked
GREEN	10 Gbps connection	BLINKING	Data activity

Dedicated Management LAN port (DM_LAN1) LED indications

SPEED LED		ACT/LINK LED	
Status	Description	Status	Description
OFF	10 Mbps connection	OFF	No link
ORANGE	100 Mbps connection	GREEN	Linked
GREEN	1 Gbps connection	BLINKING	Data activity

1.8.4 Storage device status LEDs

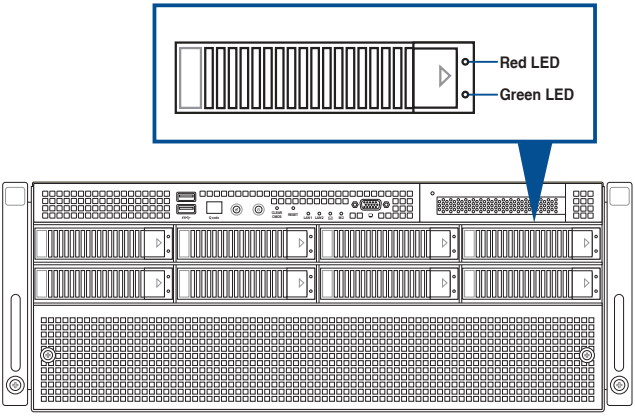

Storage Device LED Description		
Status (RED)	ON	Storage device has failed
	Blinking	RAID rebuilding or locating
Activity (GREEN)	ON	Storage device power ON
	Blinking	Storage device reading or writing data
	OFF	Storage device not found

Hardware Setup

2

This chapter lists the hardware setup procedures that you have to perform when installing or removing system components.

2.1 Chassis cover

There are two parts of the chassis cover you may remove.

The diagrams in this section are for reference only. The system layout may vary with models, but the installation steps are the same for all models.

To remove the front chassis cover:

1. Remove the three screws on the top of the chassis cover.
2. Turn the screw clockwise to unlock the latch.

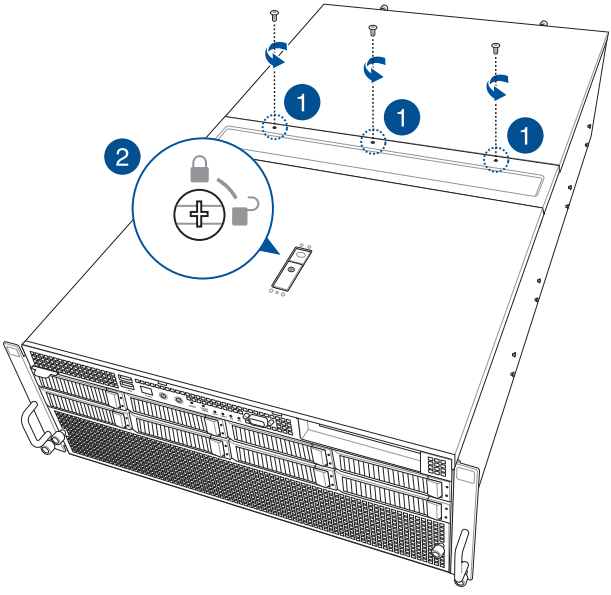

3. Press the spring lock to release the latch, then pull the latch upwards to disengage the chassis cover from the chassis.

4. Slide the chassis cover towards the front, then lift it to remove it from the chassis.

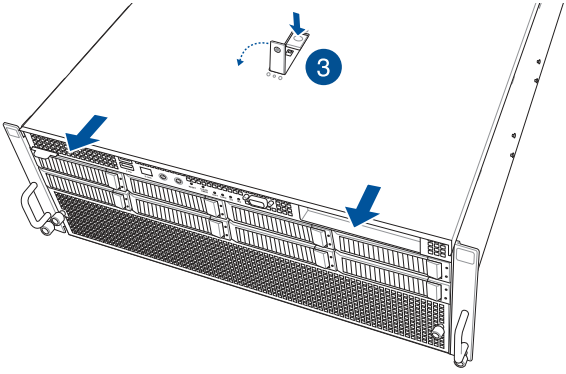

To install the front chassis cover:

1. Pull the latch upwards, then place the chassis cover onto the chassis.

2. Push the latch downwards to lock the chassis cover into place.

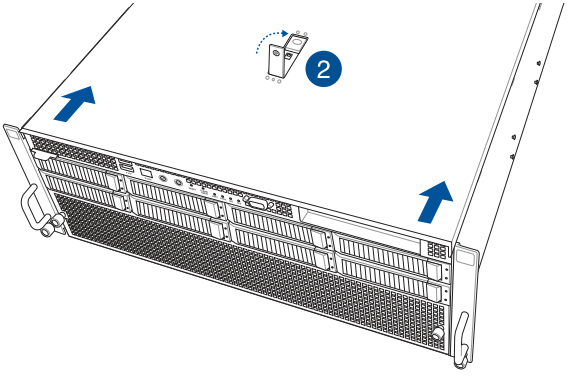

3. Turn the screw counter-clockwise to lock the latch.

4. Secure the chassis cover using the three screws removed earlier.

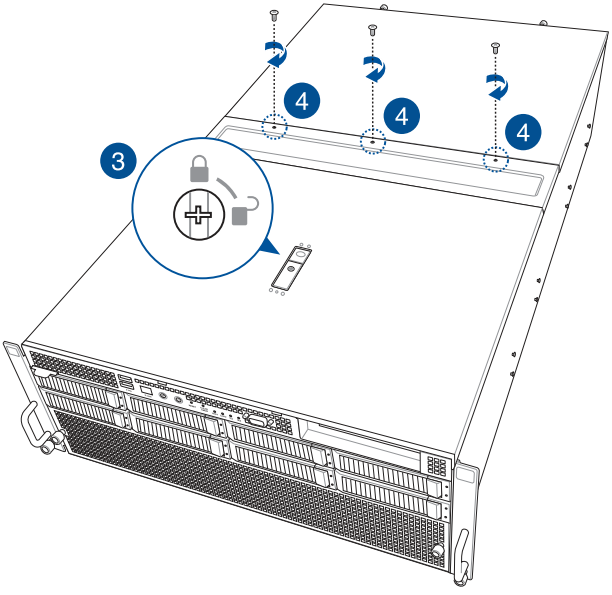

To remove the rear chassis cover:

1. Remove the three screws on the top of the chassis cover.

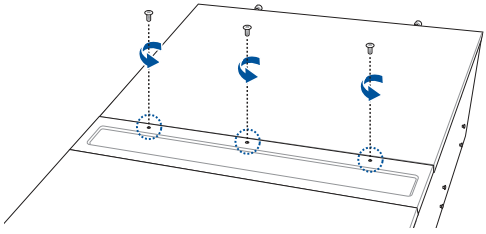

2. Loosen the two thumbscrews on the rear of the chassis.
3. Slide the chassis cover towards the rear, then lift it to remove it from the chassis.

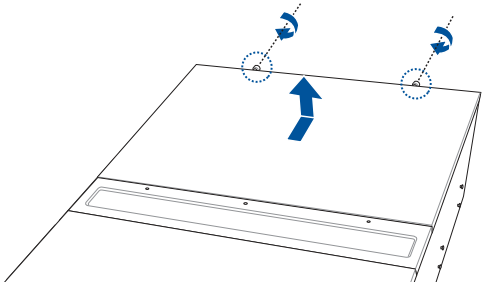

To install the rear chassis cover:

1. Place the chassis cover onto the chassis, then secure it using the two thumbscrews.

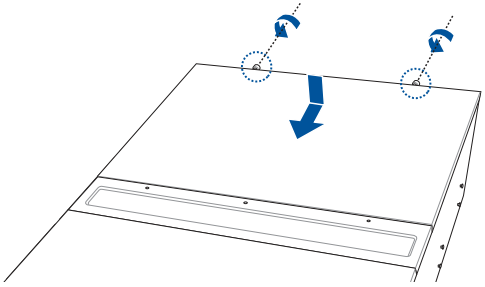

2. Secure the chassis cover using the three screws removed earlier.

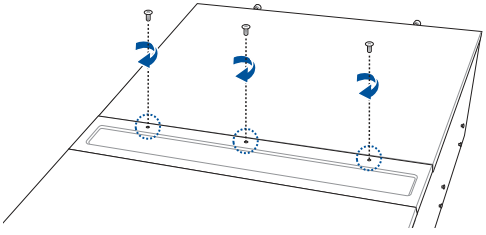

A protection film is pre-attached to the system cover before shipping. Please remove the protection film before turning on the system for proper heat dissipation.

2.2 Air ducts

The diagrams in this section are for reference only. The system layout may vary with models, but the installation steps are the same for all models.

To remove the air duct:

1. Loosen the four thumb screws on the air duct.

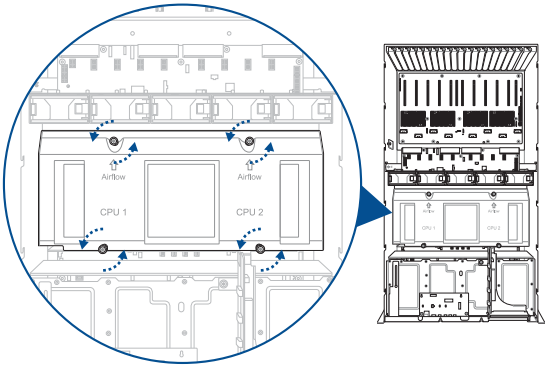

2. Lift the air duct to remove it from the motherboard.

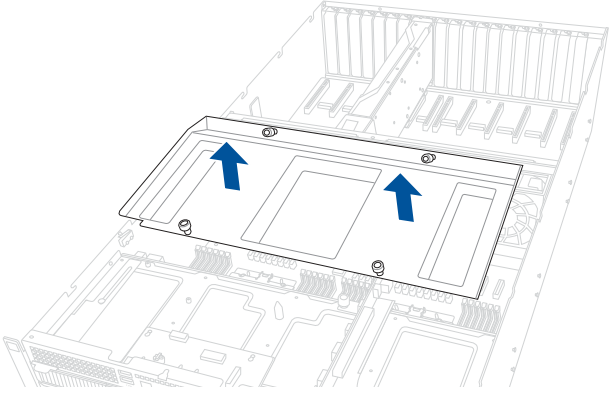

To reinstall the air duct:

1. Align and insert the air duct into the chassis.

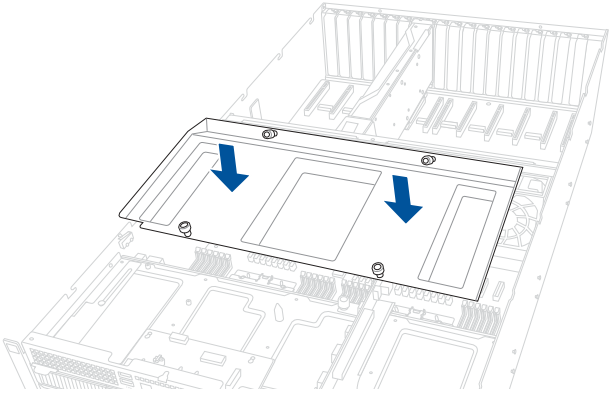

2. Tighten the four thumb screws to secure the air duct to the chassis.

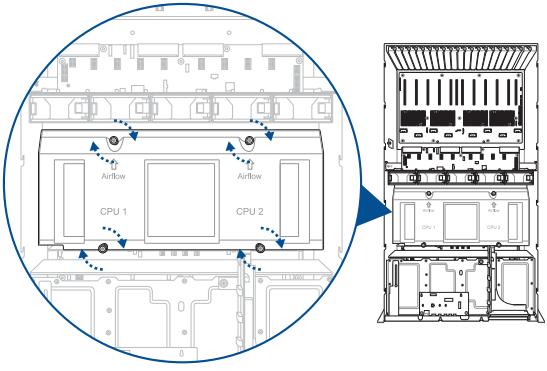

2.3 Central Processing Unit (CPU)

The motherboard comes with two (2) surface mount LGA 4677 sockets designed for 4th Gen Intel® Xeon® Scalable Processors Family CPUs.

- Upon purchase of the motherboard, ensure that the PnP cap is on the socket and the socket contacts are not bent. Contact your retailer immediately if the PnP cap is missing, or if you see any damage to the PnP cap/socket contacts/motherboard components. ASUS will shoulder the cost of repair only if the damage is shipment/transit-related.
- Keep the cap after installing the motherboard. ASUS will process Return Merchandise Authorization (RMA) requests only if the motherboard comes with the cap on the socket.
- The product warranty does not cover damage to the socket contacts resulting from incorrect CPU installation/removal, or misplacement/loss/incorrect removal of the PnP cap.

2.3.1 Installing the CPU and heatsink

1. Remove the rear chassis cover. For more information, see the **Chassis cover** section.
2. Remove the air duct. For more information, see the **Air Duct** section.
3. Locate the CPU socket on the motherboard.

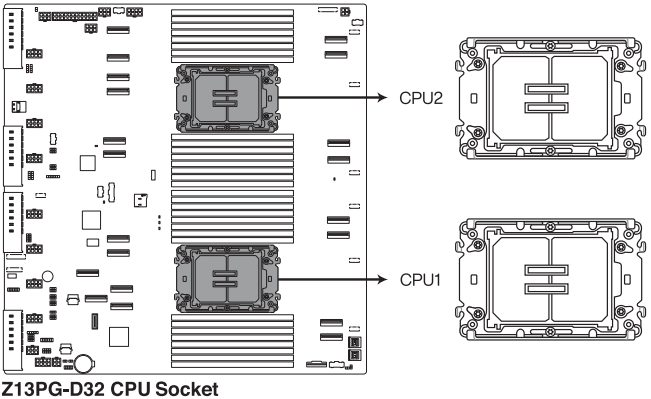

Z13PG-D32 CPU Socket

4. Remove the PnP caps from the CPU sockets.

Keep the PnP cap. ASUS will process Return Merchandise Authorization (RMA) requests only if the motherboard comes with the PnP cap on the socket.

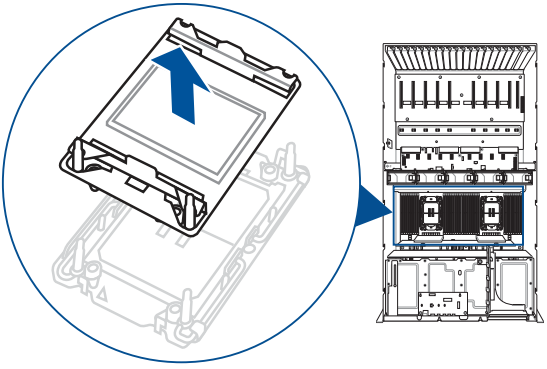

5. Attach the CPU to the carrier bracket, ensure the triangle mark is on the same side as the bracket lever, then attach the CPU and carrier bracket to the heatsink.

The CPU carrier differs depending on the type of CPU. Ensure that the CPU carrier corresponds to the CPU being installed.

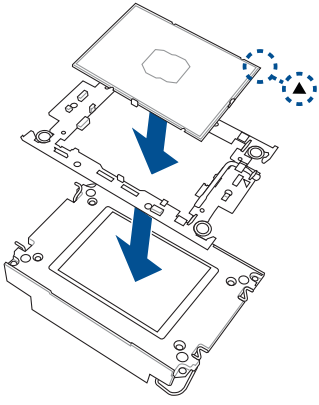

6. Align the CPU and heatsink assembly in the correct orientation so that the triangle marks on both the CPU and socket are aligned in the same direction, then place the heatsinks on top of the CPU sockets.

The CPU and CPU Carrier fits in only one correct orientation. DO NOT force the CPU and CPU Carrier into the socket to prevent damaging the CPU pins on the socket.

7. Once the heatsink is placed on top of the CPU socket (A), push the lock latches outwards on all four corners of the heatsink so that the heatsink and CPU assembly is secured to the CPU socket (B).

Ensure the triangle mark on the CPU is located in the same corner as the CPU socket.

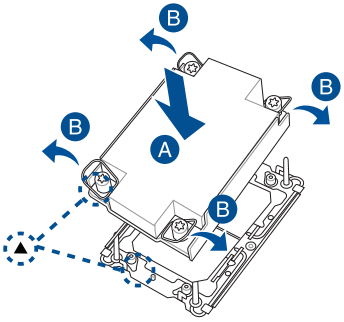

8. Do two (2) clockwise turns on each of the heatsink screws in the cross order pattern shown below until the heatsink screws are tightened and the heatsink is secured onto the motherboard.

Intel® recommends using a torque driver with a T-30 bit and a torque value of 8 lbf-in to prolong the longevity of all PEEK nuts after the quality of the load post is corrected.

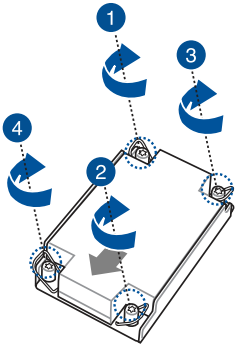

9. Reinstall the air duct. For more information, see the **Installing the air duct** section.

2.4 System memory

2.4.1 Overview

The motherboard comes with thirty two Double Data Rate 5 (DDR5) Dual Inline Memory Modules (DIMM) sockets.

The figure illustrates the location of the DDR5 DIMM sockets:

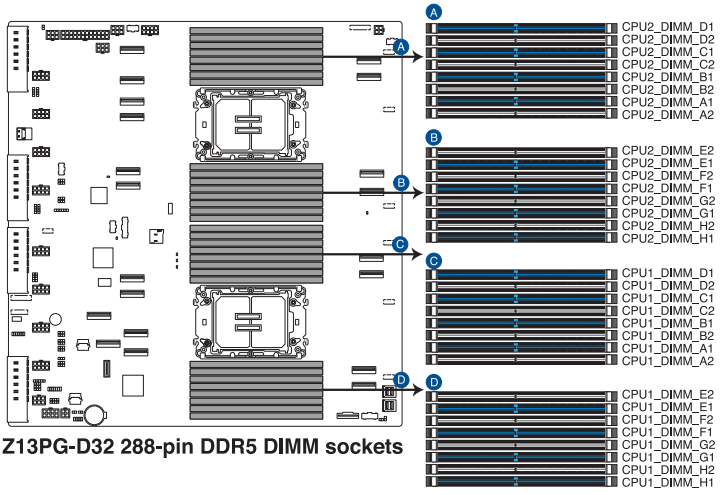

Z13PG-D32 288-pin DDR5 DIMM sockets

2.4.2 Memory configurations

You may install 16GB, 32GB, 64GB RDIMMs or128GB, 256GB RDIMM 3DS into the DIMM sockets using the recommended memory configurations in this section.

- Refer to ASUS Server AVL for the updated list of compatible DIMMs.
- Always install DIMMs with the same CAS latency. For optimum compatibility, it is recommended that you obtain memory modules from the same vendor.

Recommended dual CPU configuration

	2 DIMMs	4 DIMMs	8 DIMMs	16 DIMMs	32 DIMMs
CPU1_DIMM_A1	•	•	•	•	•
CPU1_DIMM_A2					•
CPU1_DIMM_B1				•	•
CPU1_DIMM_B2					•
CPU1_DIMM_C1			•	•	•
CPU1_DIMM_C2					•
CPU1_DIMM_D1				•	•
CPU1_DIMM_D2					•
CPU1_DIMM_E1			•	•	•
CPU1_DIMM_E2					•
CPU1_DIMM_F1				•	•
CPU1_DIMM_F2					•
CPU1_DIMM_G1		•	•	•	•
CPU1_DIMM_G2					•
CPU1_DIMM_H1				•	•
CPU1_DIMM_H2					•
CPU2_DIMM_A1	•	•	•	•	•
CPU2_DIMM_A2					•
CPU2_DIMM_B1				•	•
CPU2_DIMM_B2					•
CPU2_DIMM_C1			•	•	•
CPU2_DIMM_C2					•
CPU2_DIMM_D1				•	•
CPU2_DIMM_D2					•
CPU2_DIMM_E1			•	•	•
CPU2_DIMM_E2					•
CPU2_DIMM_F1				•	•
CPU2_DIMM_F2					•
CPU2_DIMM_G1		•	•	•	•
CPU2_DIMM_G2					•
CPU2_DIMM_H1				•	•
CPU2_DIMM_H2					•

Recommended single CPU configuration					
	1 DIMM	2 DIMMs	4 DIMMs	8 DIMMs	16 DIMMs
CPU1_DIMM_A1	•	•	•	•	•
CPU1_DIMM_A2					•
CPU1_DIMM_B1				•	•
CPU1_DIMM_B2					•
CPU1_DIMM_C1			•	•	•
CPU1_DIMM_C2					•
CPU1_DIMM_D1				•	•
CPU1_DIMM_D2					•
CPU1_DIMM_E1			•	•	•
CPU1_DIMM_E2					•
CPU1_DIMM_F1				•	•
CPU1_DIMM_F2					•
CPU1_DIMM_G1		•	•	•	•
CPU1_DIMM_G2					•
CPU1_DIMM_H1				•	•
CPU1_DIMM_H2					•

2.4.3 Installing a DIMM

Ensure to unplug the power supply before adding or removing DIMMs or other system components. Failure to do so may cause severe damage to both the motherboard and the components.

1. Remove the chassis cover. For more information, see the **Chassis cover** section.
2. Unlock a DIMM socket by pressing the retaining clips outward.
3. Align a DIMM on the socket such that the notch on the DIMM matches the DIMM slot key on the socket.

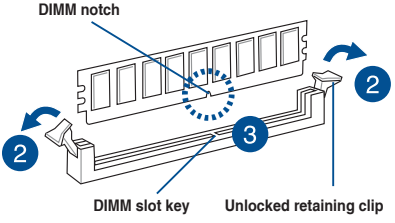

A DIMM is keyed with a notch so that it fits in only one direction. DO NOT force a DIMM into a socket in the wrong direction to avoid damaging the DIMM.

4. Hold the DIMM by both of its ends then insert the DIMM vertically into the socket. Apply force to both ends of the DIMM simultaneously until the retaining clips snap back into place.

   Ensure that the DIMM is sitting firmly in the DIMM slot.

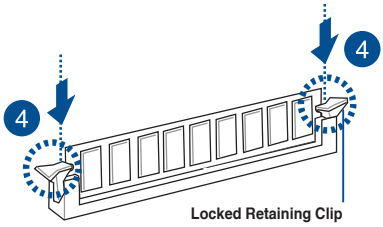

Always insert the DIMM into the socket VERTICALLY to prevent DIMM notch damage.

2.4.4 Removing a DIMM

1. Remove the chassis cover. For more information, see the **Chassis cover** section.

2. Simultaneously press the retaining clips outward to unlock the DIMM.

3. Remove the DIMM from the socket.

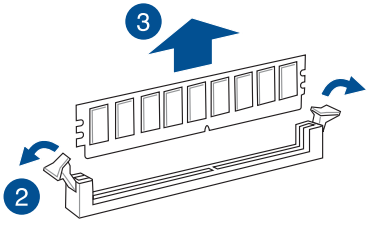

Support the DIMM lightly with your fingers when pressing the retaining clips. The DIMM might get damaged when it springs out with extra force.

2.5 Storage devices

The system supports up to eight (8) 3.5” SATA/SAS storage devices or up to eight (8) 2.5” hot-swap NVMe storage devices. Storage devices installed on storage device trays connect to the motherboard via the NVMe/SATA/SAS backplane (SAS storage devices require an optional HBA/RAID card).

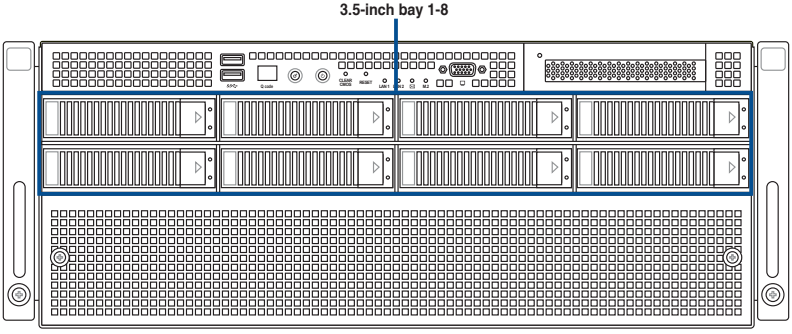

All bays support 3.5”/2.5” drives with trays.

2.5.1 Installing a 3.5-inch storage device

To install a 3.5-inch storage device:

1. Press the spring lock to release the tray lever and to partially eject the tray from the bay.

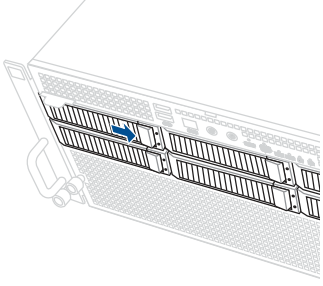

2. Firmly hold the tray lever and pull the storage device out of the bay.

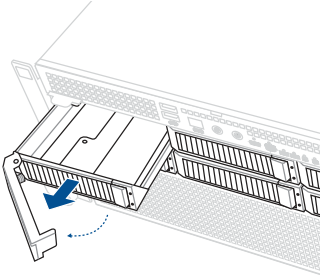

3. Place the storage device tray on a flat and stable surface.
4. Prepare the 3.5” storage device and the bundled set of screws.
5. Place the 3.5” storage device into the tray, then secure it with four screws.

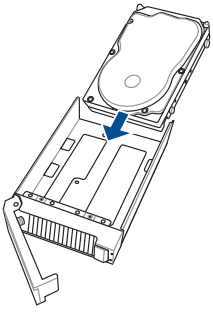

6. Carefully insert the tray and push it all the way into the storage device bay, then lock the tray lever to secure the drive bay in place.

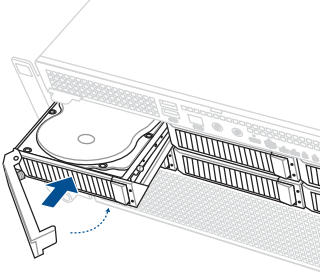

7. Repeat steps 1 to 6 to install additional 3.5” storage devices.

2.5.2 Installing a 2.5-inch storage device

1. Follow steps 1 to 3 of the **Installing a 3.5-inch storage device** section to remove the drive tray from the chassis.
2. Prepare the 2.5” storage device and the bundled set of screws.
3. Place the 2.5” storage device into the tray, then secure it with four screws.

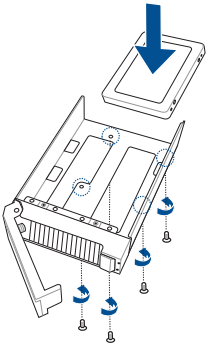

4. Carefully insert the tray and push it all the way into the storage device bay, then lock the tray lever to secure the drive bay in place.

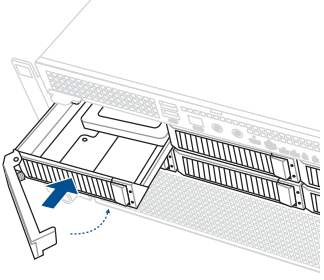

5. Repeat steps 1 to 4 to install additional 2.5” storage devices.

2.6 Expansion slots

Ensure to unplug the power cord before adding or removing expansion cards. Failure to do so may cause you physical injury and damage motherboard components.

2.6.1 Installing an expansion card to the front PCIe expansion card bracket (on select models)

The server system comes pre-installed with a front riser card bracket that supports one x16 slot (Gen5 x16 link) for installing a low-profile, half-length PCIe expansion card.

To install a PCIe expansion card to the front PCIe riser card bracket:

1. Loosen the thumb screw that secures the riser card bracket to the chassis.

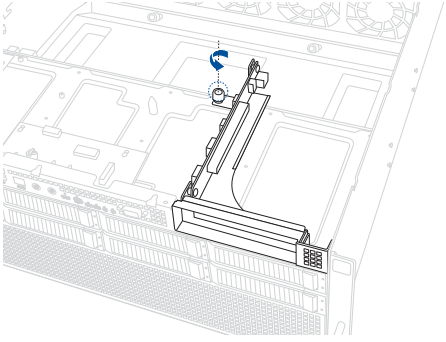

2. Firmly hold the riser card bracket, slide it towards the back of the chassis to unlock it, then pull it up to detach it from the chassis.

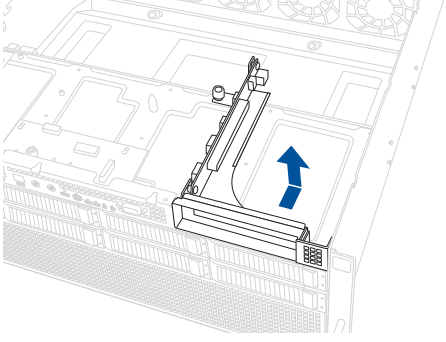

3. Push the metal bracket lock counter clockwise (A) until the metal bracket can be removed, then remove the metal bracket (B).

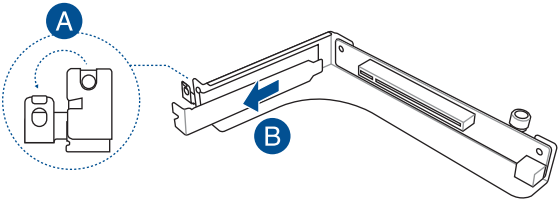

4. Insert the expansion card into the PCIe slot (A). Ensure that the golden fingers are totally inserted into the slot, then push the metal bracket lock clockwise until it locks and secures the expansion card to the riser card bracket (B).

Before installing an expansion card, read the documentation that came with it and ensure that the proper hardware settings are configured.

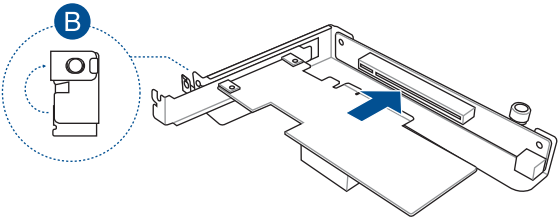

5. Align and insert the riser card and expansion card assembly into the chassis, then slide it towards the front of the chassis (A). Once in place, tighten the riser thumbscrew (B).

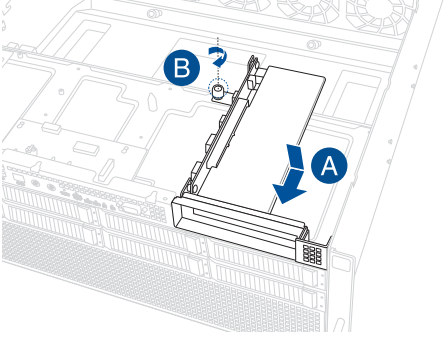

2.6.2 Installing an ASUS PIKE II or RAID card

A PIKE II or RAID card can be installed in the internal SAS/HBA/Storage bracket located in the front of the system.

1. Prepare the ASUS PIKE II or RAID card.
2. (Optional) To install an ASUS PIKE II 3108 card and cache vault, follow the below instructions to install the cache vault add-on card:

   a. Align the two spacers with the screw holes on the ASUS PIKE II card, then secure the two spacers with two screws from the bottom of the card.

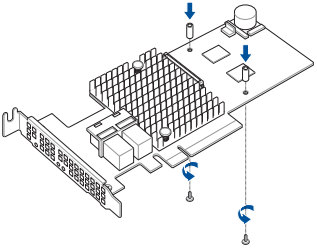

   b. Align and install the bundled cache vault add-on card onto the connector on the ASUS PIKE II card, then secure it to the two spacers with two screws.

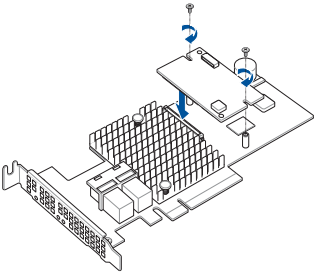

   c. Connect the bundled power cable to the cache vault add-on card.

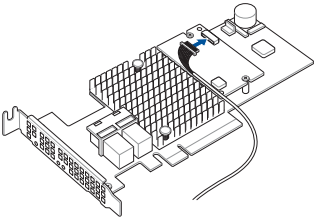

3. Follow steps 1-4 from the **Installing an expansion card to the front PCIe expansion card bracket** section to install the card to the riser bracket.

4. Refer to the **NVMe/SATA/SAS backplane** section to connect the PIKE II or RAID card to the backplane.

5. Align and insert the riser card and expansion card assembly into the chassis, then slide it towards the front of the chassis (A). Once in place, tighten the riser thumbscrew (B).

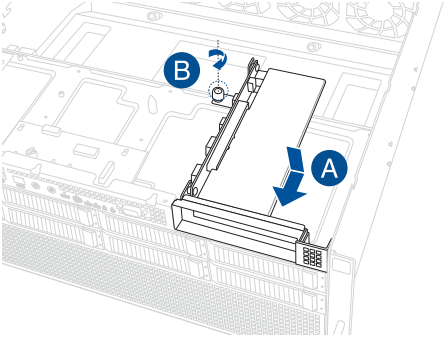

6. (Optional) Refer to the **Installing the Cache Vault Power Module** section to install and connect the Cache Vault Power Module.

2.6.3 Installing the Cache Vault Power Module

1. Unscrew the two screws securing the Cache Vault bracket to the chassis, then remove the bracket.

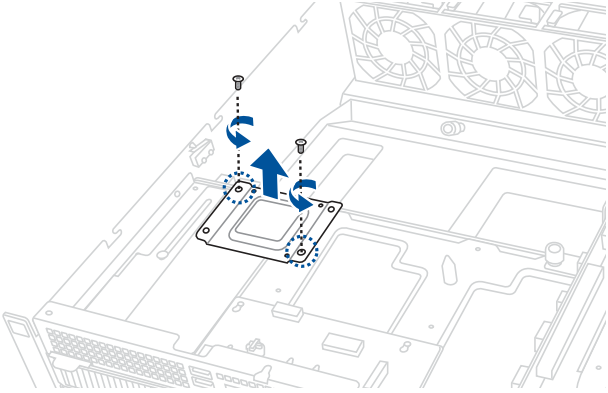

2. Align the three screw holes on the Cache Vault Power Module clip to the three screw holes on the Cache Vault bracket, then secure the clip with the three (3) bundled screws.

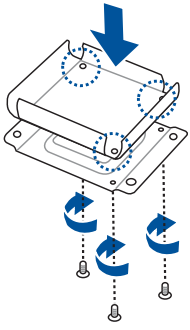

3. Align the screw holes on the Cache Vault bracket with the screw holes on the chassis, then secure the Cache Vault bracket with the two screws removed earlier.

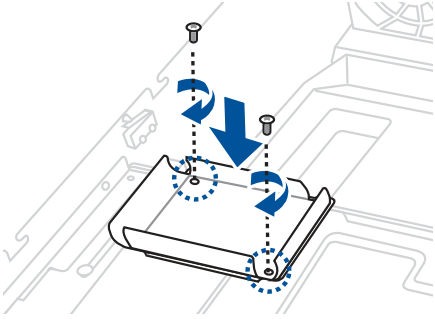

4. Align and install the Cache Vault Power Module into the Cache Vault Power Module clip.

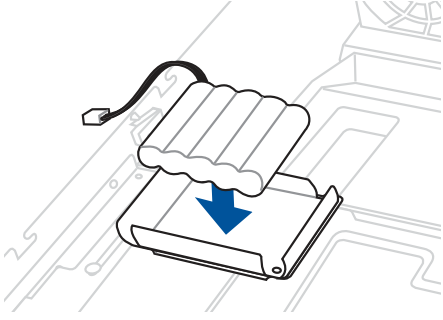

5. Connect the Cache Vault Power Module to the PIKE II card or RAID card.

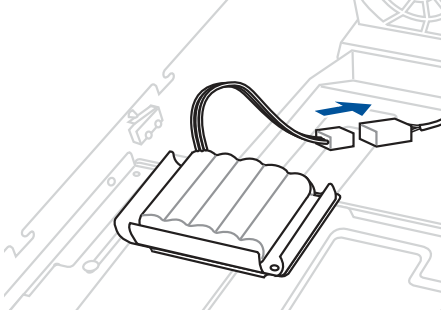

2.6.4 Installing an expansion card to the rear PCIe expansion card slots (on select models)

Follow the below instructions to install an expansion card to the rear PCIe expansion card slots.

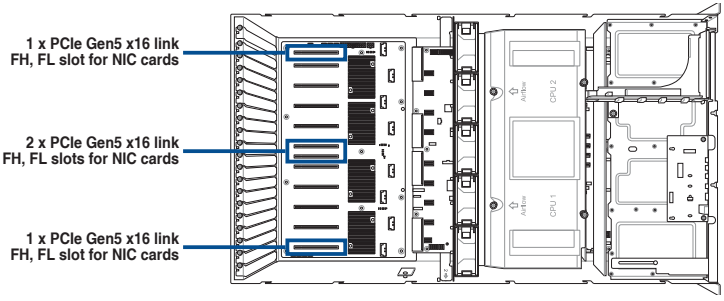

1. Remove the screws from the metal cover, then remove the metal cover.

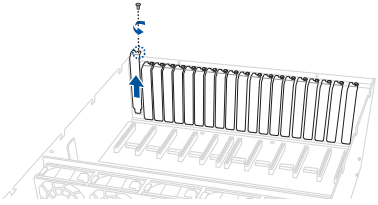

2. Align and insert the golden fingers of the PCIe card into the PCIe slot, then secure it using the screw removed earlier.

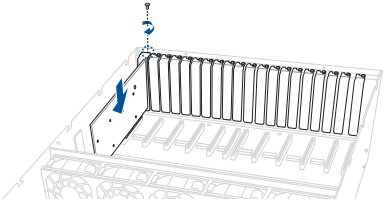

2.6.5 Installing an OCP 3.0 card to the rear OCP 3.0 socket board (on select models)

Insert and push the OCP 3.0 card all the way into the socket board (A), then secure the card with the thumb screw (B).

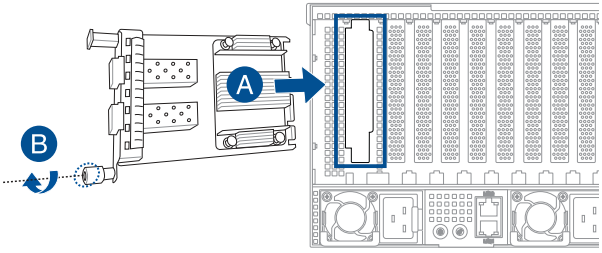

2.6.6 Installing the PFR module (optional)

The optional PFR module will come pre-installed on your system and is connected to the PFR module connector on your motherboard.

- The illustration below is for reference only.
- For more information or assistance, please refer to www.asus.com.

1. Locate the PFR module connector on your motherboard.

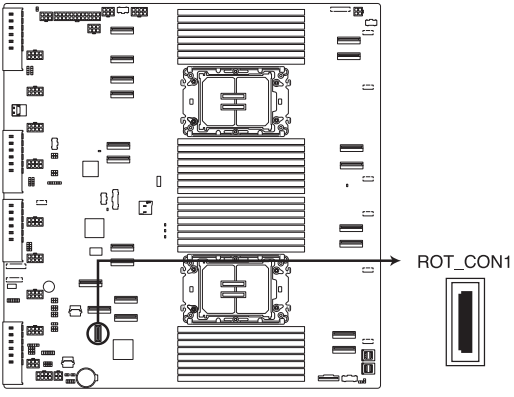

Z13PG-D32 PFR module connector

2. Align and connect the PFR module to the PFR module connector.

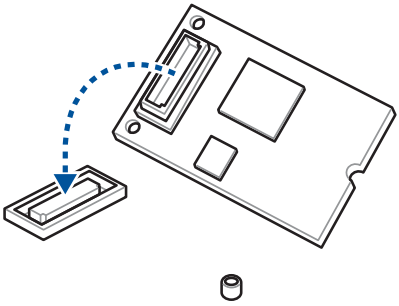

3. Push the PFR module down so that it is seated securely on the PFR module connector, then secure it using a screw.

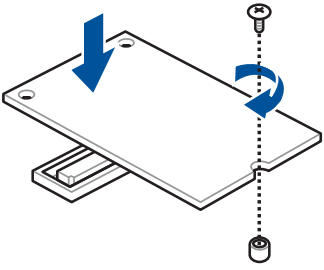

2.7 Cable connections

The bundled system cables are pre-connected before shipment. You do not need to disconnect these cables unless you remove the pre-installed components to install additional devices.

2.7.1 NVMe/SATA/SAS backplane

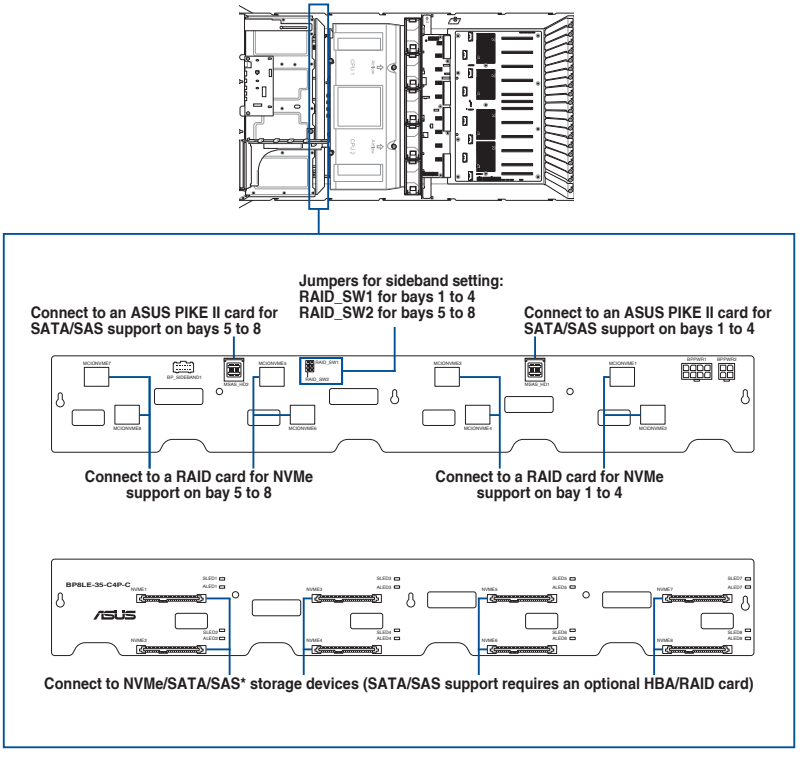

2.7.2 GPU SKU board

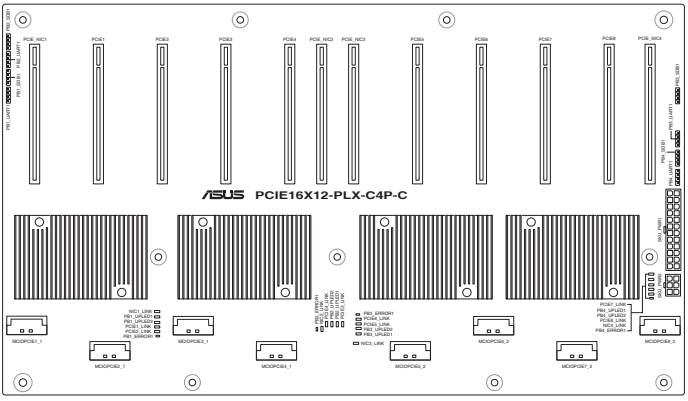
PCIE_NIC1
PCIE1
PCIE2
PCIE3
PCIE4
PCIE_NIC2
PCIE_NIC3
PCIE5
PCIE6
PCIE7
PCIE8
PCIE_NIC4
PBI_LAN1
PBI_LED1
PBI_LAN1
PBI_LED1
PBI_LAN1
PBI_LED1

2.8 GPU fans

To uninstall a GPU fan:

1. Remove the three screws on the top of the chassis cover.

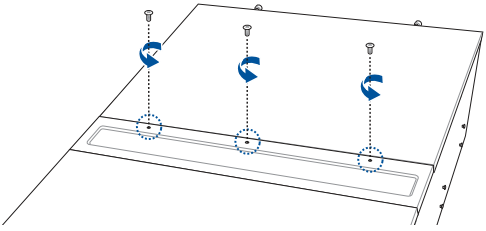

2. Open the GPU fan cover (A), then press the latch inwards to release the fan (B) and lift the fan from the fan cage (C).

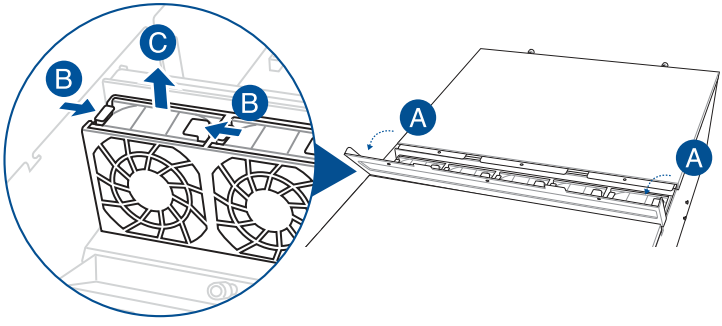

To reinstall a GPU fan:

Insert the fan into the fan cage. Ensure the fan connector is seated firmly within the cable holder.

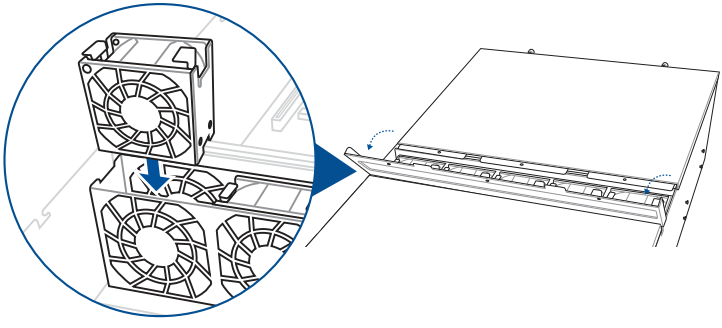

2.9 System fans

To uninstall a system fan:

1. Loosen the two thumb screws on the front of the chassis, then remove the system fan cover.

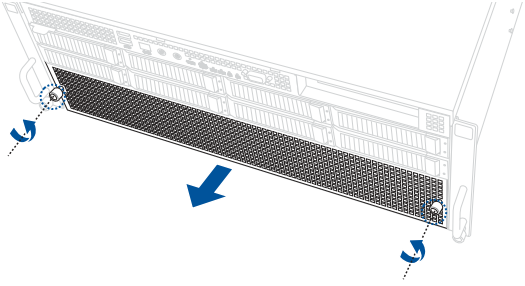

2. Press the latch inwards to release the fan (A), then pull the fan from the fan cage (B).

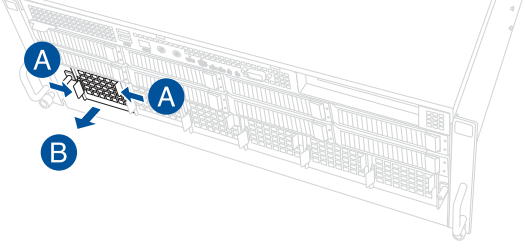

To reinstall a system fan:

Insert the fan into the fan cage. Ensure the fan connector is seated firmly within the cable holder.

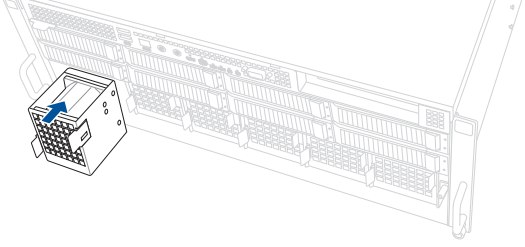

2.10 Redundant power supply units

We recommend that you use both of your hands in performing the following steps.

To replace a power supply unit (PSU):

1. Lift up the PSU lever.
2. Hold the PSU lever, press the PSU latch (A), then carefully pull the PSU out of the system chassis (B).

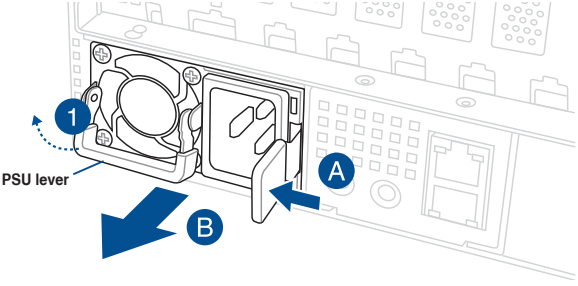

3. Align and insert the replacement PSU into the empty PSU bay until it clicks in place.

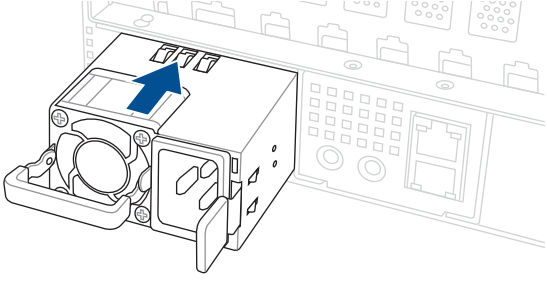

- The system automatically combines the two power supply modules as a single one. The combined output power varies with input voltages.
- To enable the hot-swap feature (redundant mode), keep the total power consumption of the system under the maximum output power of an individual power supply module.

- Always use PSUs with the same watt and power rating. Combining PSUs with different wattages may yield unstable results and potential damage to your system.
- At least two working power supply units are required in order for the system to boot normally.
- For a steady power input, use only the power cables that come with the server system package.

2.11 GPU cards

- Use both of your hands in performing the following steps.
- Read the documentation that comes with your GPU card before installing them.
- When installing more than one GPU card, it is recommended to install the cards in the following order: PCIE1 > PCIE2 > PCIE3 > PCIE4 > PCIE5 > PCIE6 > PCIE7 > PCIE8. Refer to the **GPU SKU board** section for location of the PCIe slots.

To install a GPU card to the system:

1. Remove the screws on the sides of the chassis, then remove the metal bar as shown in the illustration below.

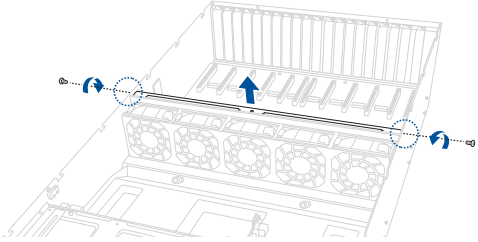

2. Remove the screws from the metal covers, then remove the metal covers.

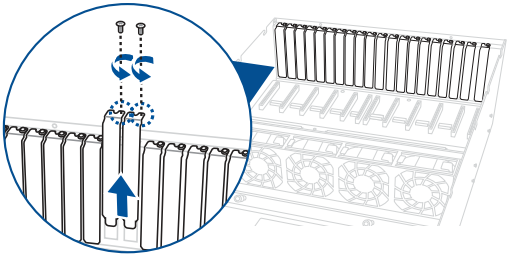

3. Prepare the appropriate GPU power cable depending on the type of GPU card.

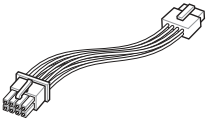

Tesla/AMD
8pin to 8pin power cable

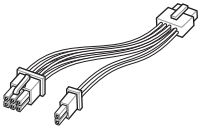

Quadro
6+2pin to 8pin power cable

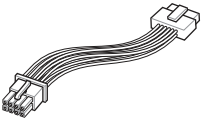

12VHPWR
8pin to 12+4pin power cable

4. Connect the 8-pin end of the power cable to an available power connector in the middle of the server system.

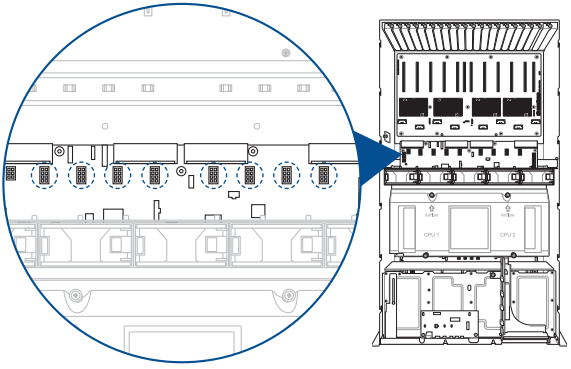

5. Secure the air duct to the GPU card with two screws.

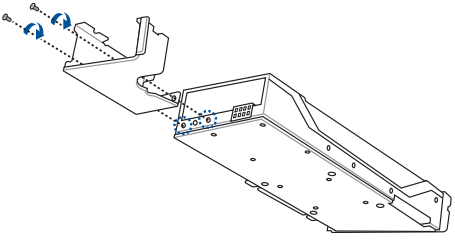

6. Align and insert the golden fingers of the GPU card into the PCIe slot on the PCIe SKU board, then secure it using the two screws removed earlier.

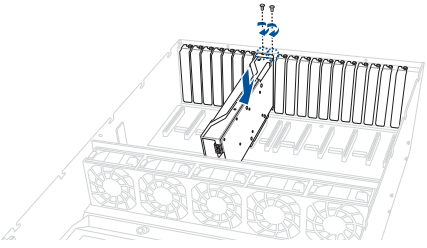

7. Connect the GPU power cable to the connector on the GPU card.

Ensure that the GPU power cable is completely inserted into the power connector on the GPU card or serious damage to your system may occur.

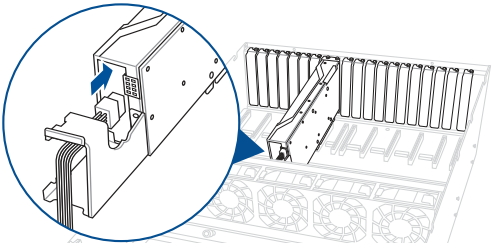

8. (Optional) For passively-cooled GPUs, install the additional air duct attachment.

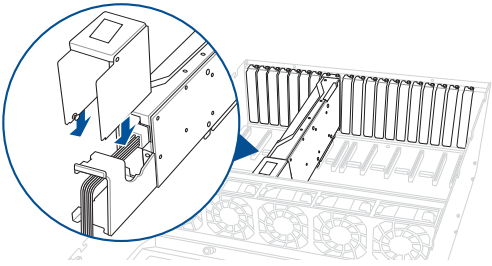

9. Repeat steps 1-8 to install additional GPU cards.

2.12 GPU bridges

Follow the steps below to install an optional GPU bridge to supported GPU cards.

For AMD GPU cards with GPU bridge support

Align the GPU bridge with the golden finger connectors on the GPU cards, then install the GPU bridge.

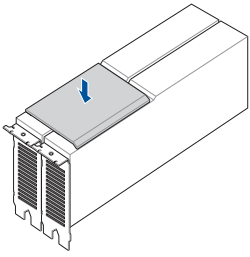

For NVidia A100 GPU cards

Align the three GPU bridges with the golden finger connectors on the GPU cards, then install the GPU bridges.

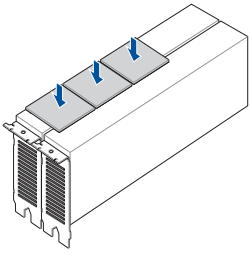

For NVidia RTX A5000 / A6000 GPU cards

Align the GPU bridge with the golden finger connectors on the GPU cards, then install the GPU bridge.

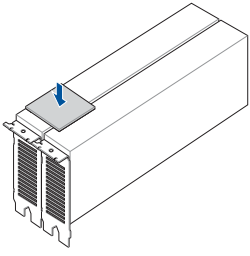

2.13 Motherboard

2.13.1 Removing the motherboard

To remove the system motherboard:

1. Disconnect the cables from the motherboard and remove any installed components on the motherboard.

> Take a photo or make a note of which components are removed, which cables are disconnected, and which connectors the cables were connected to.

2. Remove the screws, then remove the motherboard.

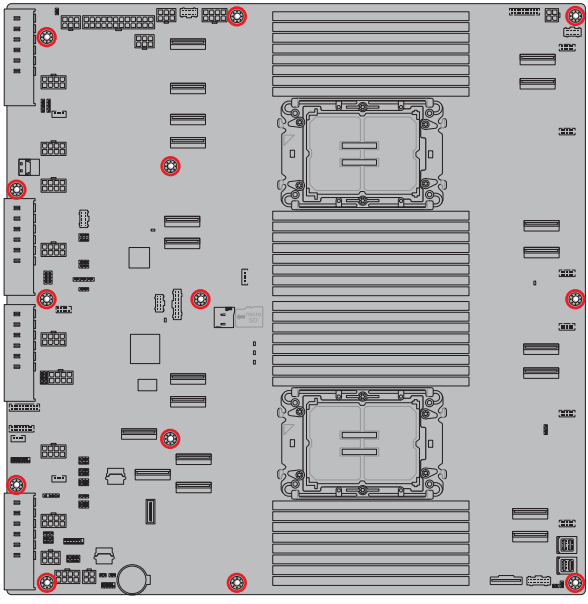

2.13.2 Installing the motherboard

To install the system motherboard:

1. Place the motherboard into the chassis and ensure the screw holes on the motherboard are aligned with the screw holes in the chassis, then secure the motherboard to the chassis using the screws removed previously.

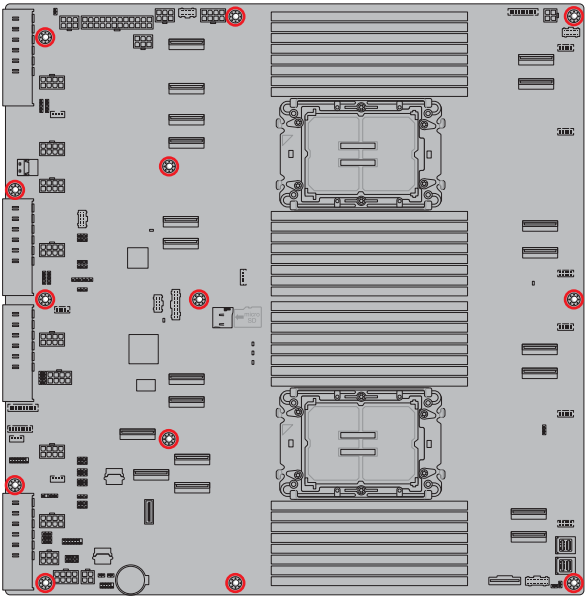

2. Reinstall any removed components and reconnect the cables to the motherboard.

2.14 CMOS battery

To replace a CMOS battery:

1. Locate and remove the CMOS battery.

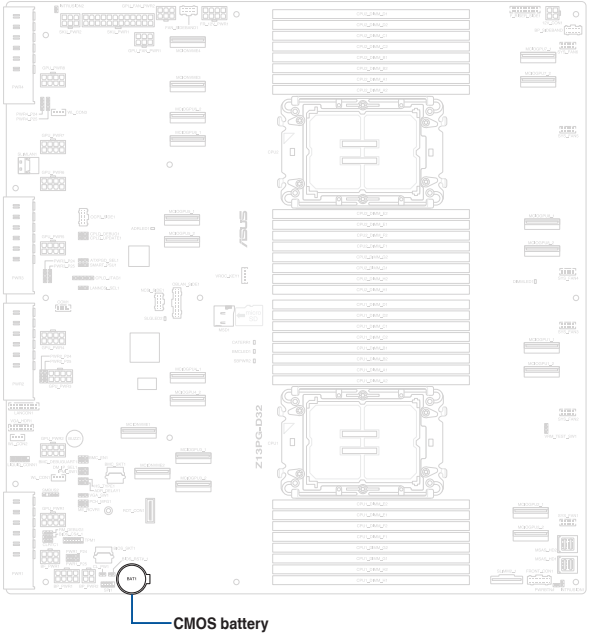

2. Place the replacement CMOS battery into the battery compartment.

2.15 Rail kit options

This server system supports the rail kit options listed below. For more information on rail kit installation, refer to corresponding documentation on the ASUS support site or on the official product site for this server system.

- We strongly recommend that at least two able-bodied persons perform the installation of the rail kit.
- We recommend the use of an appropriate lifting tool or device, if necessary.

- 2U full extension ball bearing rail kit

Motherboard Information

3

This chapter gives information about the motherboard that comes with the server. This chapter includes the motherboard layout, jumper settings, and connector locations.

3.1 Motherboard layout

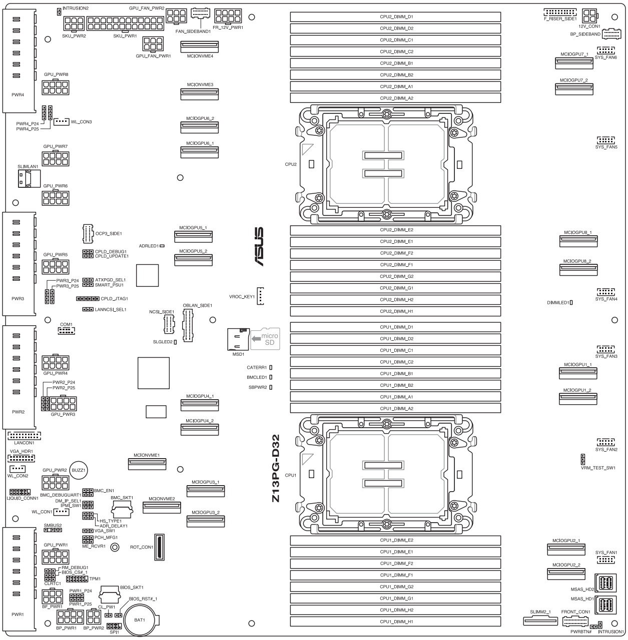

Layout contents

Central Processing Unit (CPU)		Page
1.	CPU socket(s)	3-4

Dual Inline Memory Module (DIMM)		Page
1.	DIMM sockets	3-4

Jumpers		Page
1.	DMLAN setting (3-pin DM_IP_SEL1)	3-5
2.	VGA Controller setting (3-pin VGA_SW1)	3-5

Internal connectors		Page
1.	TPM connector (14-1-pin TPM1)	3-6
2.	Platform Firmware Resilience (PFR) module connector (ROT_CON1)	3-6
3.	VROC Key connector (4-pin VROC_KEY1)	3-7
4.	GPU_PWR connectors (8-pin GPU_PWR1-8)	3-7
5.	BF Power connector (6-pin BFPWR1)	3-8
6.	MicroSD Card slot (MSD1)	3-9

Onboard LEDs		Page
1.	Baseboard Management Controller LED (BMCLED1)	3-10
2.	DIMM LED (DIMMLED1)	3-10

3.2 Central Processing Unit (CPU)

The motherboard comes with two (2) surface mount LGA 4677 sockets designed for the 4th Gen Intel® Xeon® Scalable Processors Family series.

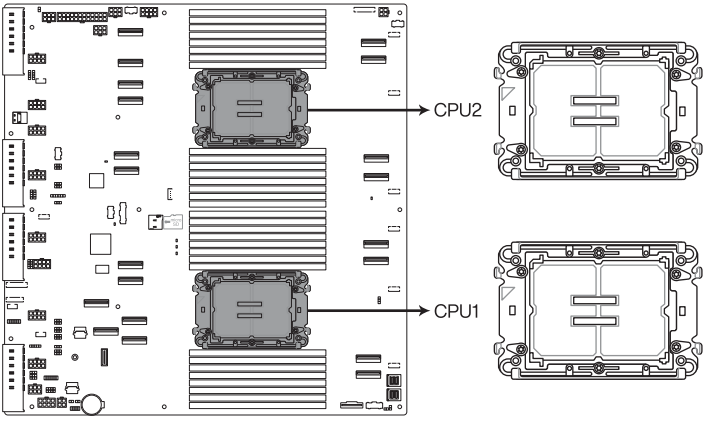

Z13PG-D32 CPU LGA 4677 Socket

3.3 Dual Inline Memory Module (DIMM)

The motherboard comes with thirty two (32) Double Data Rate 5 (DDR5) Dual Inline Memory Modules (DIMM) sockets.

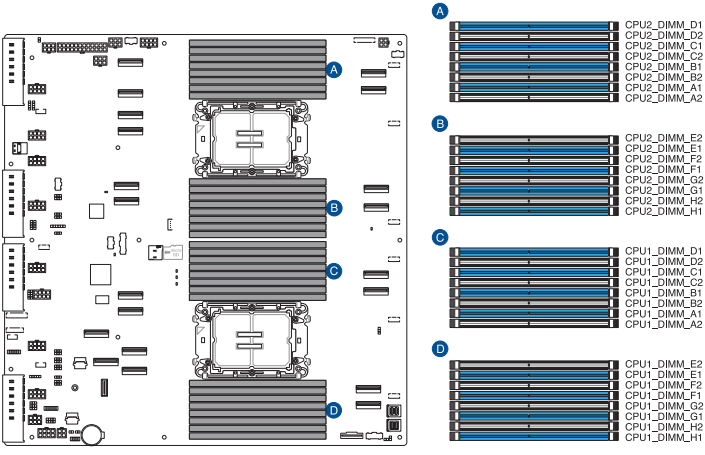

Z13PG-D32 288-pin DDR5 DIMM sockets

3.4 Jumpers

1. DMLAN setting (3-pin DM_IP_SEL1)

This jumper allows you to select the DMLAN setting. Set to pins 2-3 to force the DMLAN IP to static mode (IP=10.10.10.10, submask=255.255.255.0).

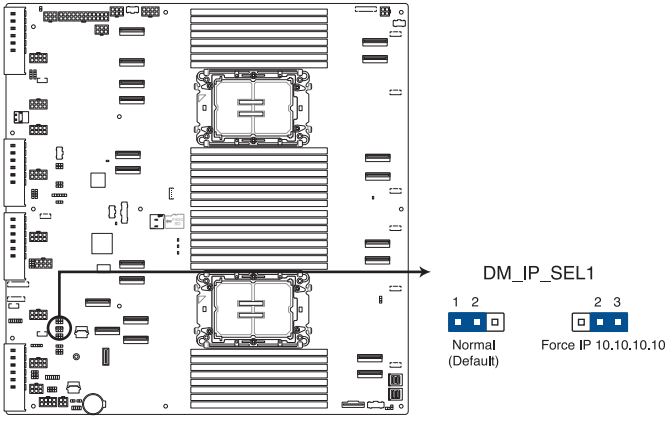

Z13PG-D32 DM_IP_SEL1

2. VGA Controller setting (3-pin VGA_SW1)

This jumper allows you to enable or disable the onboard VGA controller. Set to pins 1–2 to activate the VGA feature.

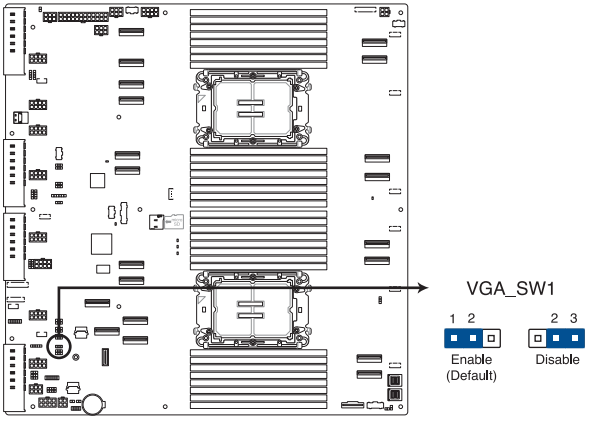

Z13PG-D32 VGA_SW1

3.5 Internal connectors

1. TPM connector (14-1 pin TPM1)

This connector supports a Trusted Platform Module (TPM) system, which can securely store keys, digital certificates, passwords, and data.

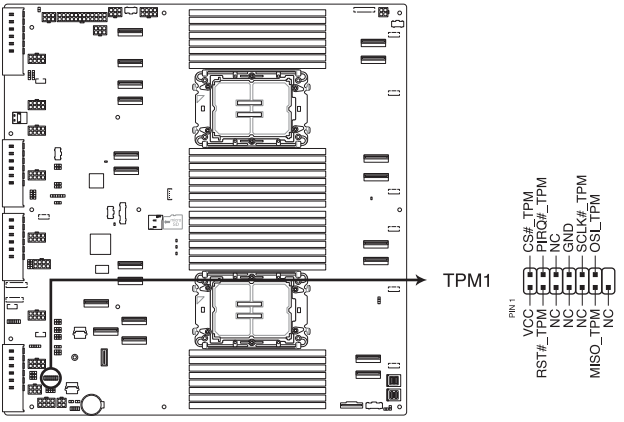

Z13PG-D32 TPM1

2. Platform Firmware Resilience (PFR) Module connector (ROT_CON)

This connector allows you to connect a PFR module to enable platform firmware resilience functions.

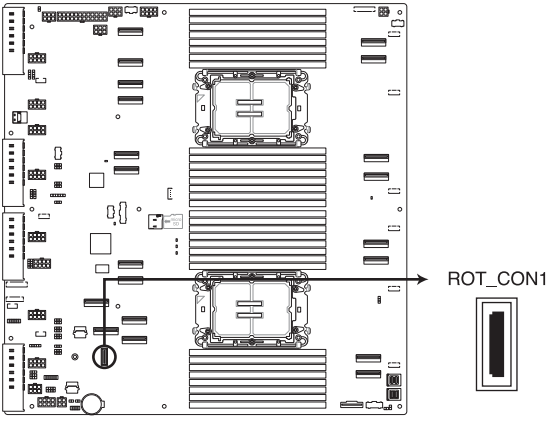

Z13PG-D32 ROT_CON1

3. VROC Key connector (4-pin VROC_KEY1)

The VROC (Virtual Raid on CPU) Key connector allows you to connect a VROC hardware key to enable additional CPU RAID functions with Intel® CPU RSTe.

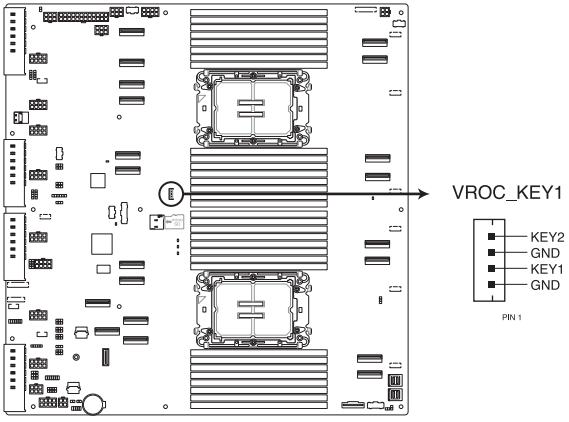

Z13PG-D32 VROC_KEY1

4. GPU_PWR connectors (8-pin GPU_PWR1-8)

This connector supplies power to GPU cards. The 8-pin ATX power supply plug is designed to fit this connector in only one orientation. Find the proper orientation and push down firmly until the connector completely fits.

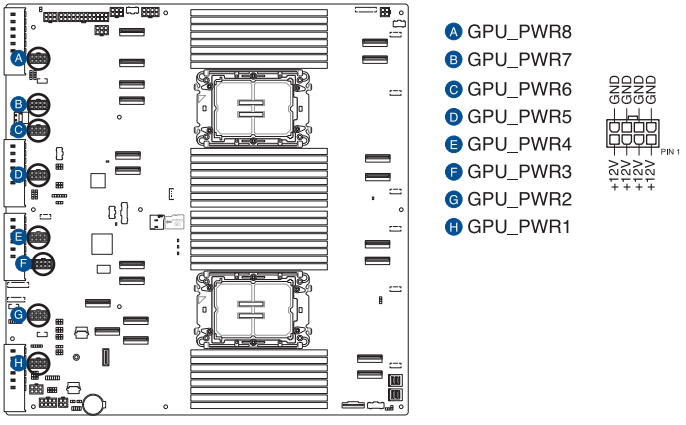

Z13PG-D32 GPU power connectors

5. **BF Power connector (6-pin BF_PWR1)**

This connector supplies power to the optional BlueField Ethernet DPU card. The 6-pin ATX power supply plug is designed to fit this connector in only one orientation. Find the proper orientation and push down firmly until the connector completely fits.

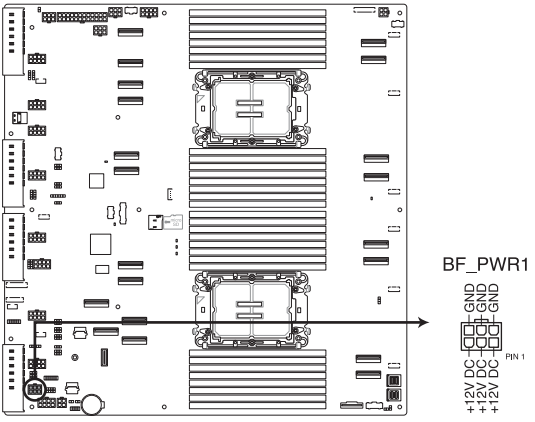

Z13PG-D32 BF power connector

This power connector supplies a maximum of 150W and is only intended for use with a Bluefield Ethernet DPU card.

6. MicroSD Card slot (MSD1)

The microSD card slot allows you to install a microSD memory card v2.00 (SDHC) / v3.00 (SDXC) to log BMC events.

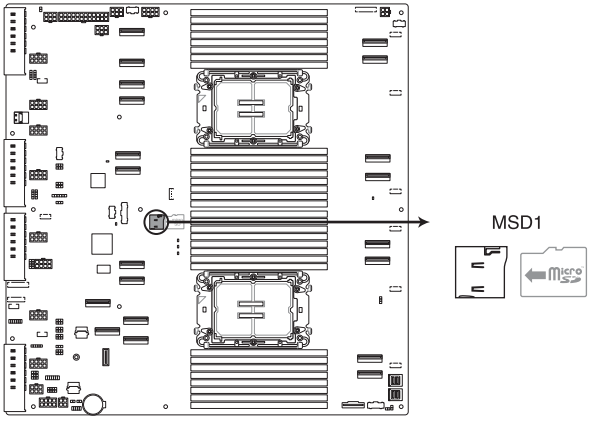

Z13PG-D32 MSD1

Disconnect all power (including redundant PSUs) from the existing system before you add or remove a memory card, then reboot the system to access the memory card.

Some memory cards may not be compatible with your motherboard. Ensure that you use only compatible memory cards to prevent loss of data, damage to your device or memory card, or both.

3.6 Onboard LEDs

1. Baseboard Management Controller LED (BMCLED1)

The BMC LED lights up to indicate that the on-board BMC is functional.

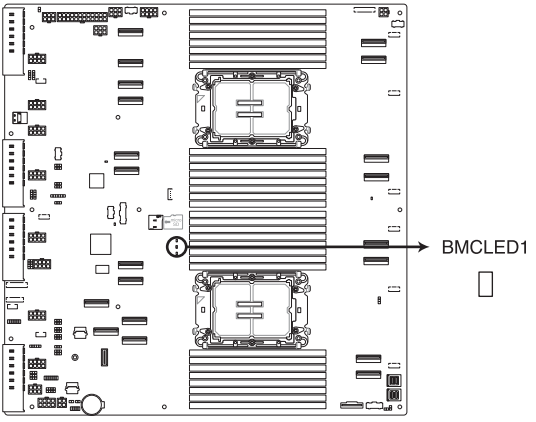

Z13PG-D32 BMCLED1

2. DIMM LED (DIMMLED1)

The DIMM LED indicates that the 12V DIMM power is ready.

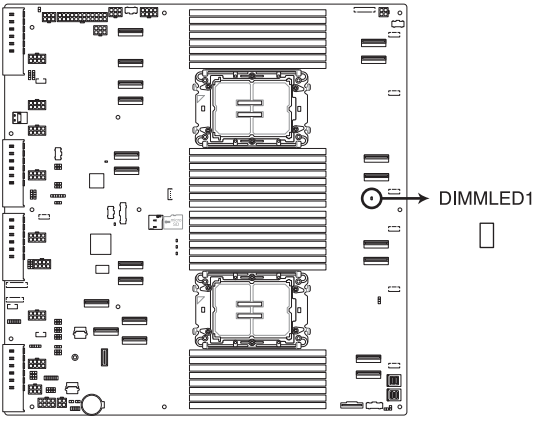

Z13PG-D32 DIMMLED1

BIOS Setup

4

This chapter tells how to change the system settings through the BIOS Setup menus. Detailed descriptions of the BIOS parameters are also provided.

4.1 Managing and updating your BIOS

The following utilities allow you to manage and update the motherboard Basic Input/Output System (BIOS) setup:

1. **ASUS CrashFree BIOS 3**

   To recover the BIOS using a bootable USB flash disk drive if the BIOS file fails or gets corrupted.

2. **ASUS EzFlash**

   Updates the BIOS using a USB flash disk.

Refer to the corresponding sections for details on these utilities.

4.1.1 ASUS CrashFree BIOS 3 utility

The ASUS CrashFree BIOS 3 is an auto recovery tool that allows you to restore the BIOS file if it fails or gets corrupted during the updating process. You can update a corrupted BIOS file using a USB flash drive that contains the updated BIOS file.

Prepare a USB flash drive containing the updated motherboard BIOS before using this utility.

Recovering the BIOS from a USB flash drive

To recover the BIOS from a USB flash drive:

1. Insert the USB flash drive with the original or updated BIOS file to one USB port on the system.
2. The utility will automatically recover the BIOS. It resets the system when the BIOS recovery finished.

DO NOT shut down or reset the system while recovering the BIOS! Doing so would cause system boot failure!

The recovered BIOS may not be the latest BIOS version for this motherboard. Visit the ASUS website at www.asus.com to download the latest BIOS file.

4.1.2 ASUS EZ Flash Utility

The ASUS EZ Flash Utility feature allows you to update the BIOS without having to use a DOS-based utility.

Before you start using this utility, download the latest BIOS from the ASUS website at www.asus.com.

To update the BIOS using EZ Flash Utility:

1. Insert the USB flash disk that contains the latest BIOS file into the USB port.
2. Enter the BIOS setup program. Go to the **Tool** menu, then select **Start ASUS EZ Flash**. Press <Enter>.

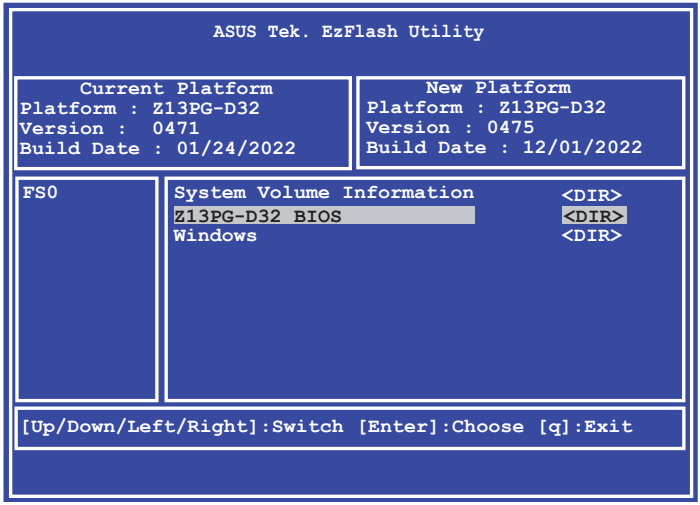

3. Press the Left/Right arrow keys to switch to the **Drive** field.
4. Press the Up/Down arrow keys to find the USB flash disk that contains the latest BIOS, then press <Enter>.
5. Press Left/Right arrow keys to switch to the **Folder Info** field.
6. Press the Up/Down arrow keys to find the BIOS file, then press <Enter> to perform the BIOS update process. Reboot the system when the update process is done.

- This function can support devices such as a USB flash disk with FAT 32/16 format and single partition only.
- DO NOT shut down or reset the system while updating the BIOS to prevent system boot failure!

Ensure to load the BIOS default settings to ensure system compatibility and stability. Press <F5> and select **Yes** to load the BIOS default settings.

4.2 BIOS setup program

This motherboard supports a programmable firmware chip that you can update using the provided utility described in the **Managing and updating your BIOS** section.

Use the BIOS Setup program when you are installing a motherboard, reconfiguring your system, or prompted to “Run Setup.” This section explains how to configure your system using this utility.

Even if you are not prompted to use the Setup program, you can change the configuration of your computer in the future. For example, you can enable the security password feature or change the power management settings. This requires you to reconfigure your system using the BIOS Setup program so that the computer can recognize these changes and record them in the CMOS RAM of the firmware chip.

The firmware chip on the motherboard stores the Setup utility. When you start up the computer, the system provides you with the opportunity to run this program. Press <Del> during the Power-On Self-Test (POST) to enter the Setup utility; otherwise, POST continues with its test routines.

If you wish to enter Setup after POST, restart the system by pressing <Ctrl>+<Alt>+<Delete>, or by pressing the reset button on the system chassis. You can also restart by turning the system off and then back on. Do this last option only if the first two failed.

The Setup program is designed to make it as easy to use as possible. Being a menu-driven program, it lets you scroll through the various sub-menus and make your selections from the available options using the navigation keys.

- The default BIOS settings for this motherboard apply for most conditions to ensure optimum performance. If the system becomes unstable after changing any BIOS settings, load the default settings to ensure system compatibility and stability. Press <F5> and select **Yes** to load the BIOS default settings.
- Support for BIOS functions and options may vary based on AVL testing progress. Please contact your sales representative for more information.
- The BIOS setup screens shown in this section are for reference purposes only, and may not exactly match what you see on your screen.
- Visit the ASUS website (www.asus.com) to download the latest BIOS file for this motherboard.

4.2.1 BIOS menu screen

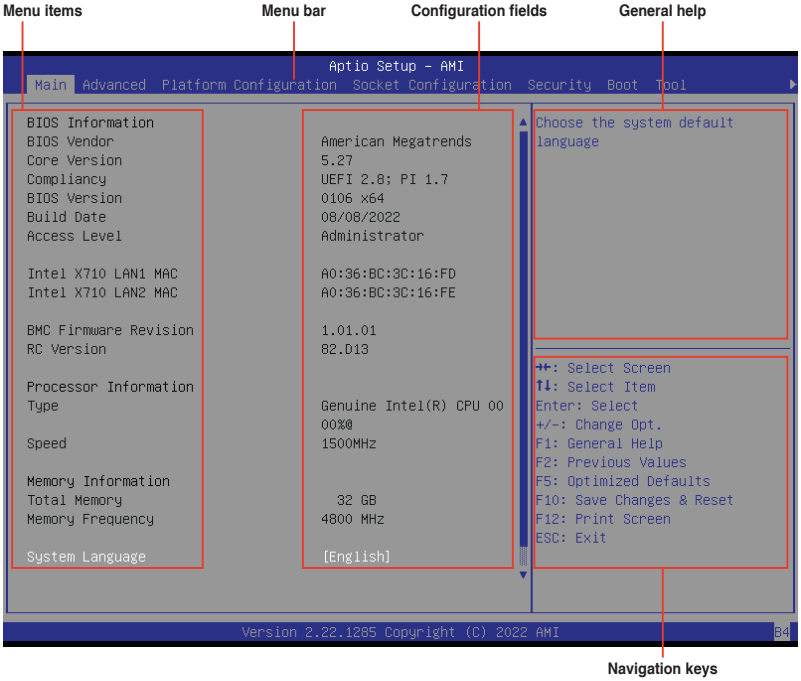

4.2.2 Menu bar

The menu bar on top of the screen has the following main items:

Main	For changing the basic system configuration
Advanced	For changing the advanced system settings
Platform Configuration	For changing the platform configuration settings
Socket Configuration	For changing the socket configuration settings
Security	For changing the security settings
Boot	For changing the system boot configuration
Tool	For configuring options for special functions
Event Logs	For changing the event log settings
Server Mgmt	For changing the Server Mgmt settings
Exit	For selecting the exit options

To select an item on the menu bar, press the right or left arrow key on the keyboard until the desired item is highlighted.

Menu items

The highlighted item on the menu bar displays the specific items for that menu. For example, selecting **Main** shows the Main menu items.

The other items (such as Advanced) on the menu bar have their respective menu items.

Submenu items

A solid triangle before each item on any menu screen means that the item has a submenu. To display the submenu, select the item then press <Enter>.

Navigation keys

At the bottom right corner of a menu screen are the navigation keys for the BIOS setup program. Use the navigation keys to select items in the menu and change the settings.

General help

At the top right corner of the menu screen is a brief description of the selected item.

Configuration fields

These fields show the values for the menu items. If an item is user-configurable, you can change the value of the field opposite the item. You cannot select an item that is not user-configurable.

A configurable field is enclosed in brackets, and is highlighted when selected. To change the value of a field, select it and press <Enter> to display a list of options.

Pop-up window

Select a menu item and press <Enter> to display a pop-up window with the configuration options for that item.

Scroll bar

A scroll bar appears on the right side of a menu screen when there are items that do not fit on the screen. Press the Up/Down arrow keys or <Page Up> / <Page Down> keys to display the other items on the screen.

4.3 Main menu

When you enter the BIOS Setup program, the Main menu screen appears. The Main menu provides you an overview of the basic system information, and allows you to set the system date, time, language, and security settings.

System Language

Allows you to set the system language.

System Date [MM/DD/YYYY]

Allows you to set the system date.

System Time [HH:MM:SS]

Allows you to set the system time.

4.4 Performance Tuning menu

The Performance Tuning menu items allow you to change performance related settings for different scenarios.

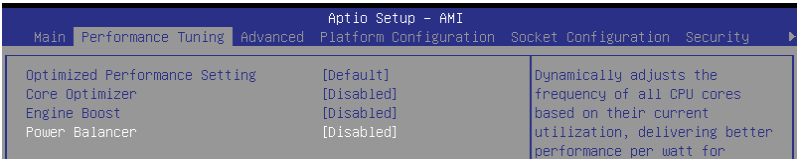

Optimized Performance Setting [Default]

Allows you to select performance settings for different scenarios.

[Default] Default settings.

[By Benchmark] Optimize for different kinds of benchmarks. Select this option, then select a benchmark type from the >> list.

[By Workload] Optimize for different kinds of workloads. Select this option, then select a workload type from the >> list.

This function will reset some BIOS settings that you have changed back to their default values. Please check your BIOS settings again.

The following item appears only when **Power Balancer** is set to **[Disabled]**, or if Optimized Performance Setting is set to **[Default]** or **[By Benchmark]**.

Core Optimizer [Disabled]

Allows you to keep the processor operating at the turbo highest frequency for the maximum performance.
Configuration options: [Disabled] [Auto] [Manual]

The following item appears only when you set **Core Optimizer** to **[Manual]**.

CPU Max frequency [XXXX]
The default value for this option will be the maximum supported frequency of the CPU installed and may vary between different CPUs.

The following item appears only when you set **Optimized Performance Setting** to **[Default] or [By Benchmark]**.

Engine Boost [Disabled]

Enable this item to boost the CPU's frequency. Recommended operation at an ambient temperature of 25°C or below for optimized performance.
Configuration options: [Disabled] [Normal] [Aggressive]

Operate with an ambient temperature of 25°C or lower for optimized performance.

The following item appears only when you set **Core Optimizer** to **[Disabled]**, or if Optimized Performance Setting is set to **[Default]** or **[By Benchmark]**.

Power Balancer [Disabled]

Allows you to dynamically adjust the frequency of all CPU cores based on their current utilization, delivering better performance per watt for improved system energy efficiency.
Configuration options: [Disabled] [Enabled by BIOS] [Enabled by ACC]

When setting **Power Balancer** to **[Enabled by ACC]**, make sure that you have the latest ASUS Control Center software installed to support Power Balancer. Please see below for recommended software versions:
- ACC: 1.4.3.5 version or above.

The following item appears only when you set **Power Balancer** to **[Enabled by BIOS]** or **[Enabled by ACC]**.

Policy [Auto]

Configuration options: [Auto] [Manual]

The following item appears only when you set **Policy** to **[Manual]**.

CPU Max frequency [XXXX]

The default value for this option will be the maximum supported frequency of the CPU installed and may vary between different CPUs.

4.5 Advanced menu

The Advanced menu items allow you to change the settings for the CPU and other system devices.

Take caution when changing the settings of the Advanced menu items. Incorrect field values can cause the system to malfunction.

```
                          Aptio Setup - AMI
 Main  Advanced  Platform Configuration  Socket Configuration  Security  Boot  Tool

 AutoVMD                                  [Enable]
▶ Trusted Computing
▶ ACPI Settings
▶ Redfish Host Interface Settings
▶ Onboard LAN Configuration
▶ Serial Port Console Redirection
▶ SIO Configuration
▶ PCI Subsystem Settings
▶ USB Configuration
▶ Network Stack Configuration
▶ NVMe Configuration
▶ APM Configuration

▶ Tls Auth Configuration
▶ Intel(R) Ethernet Controller X710 for 10GBASE-T -
  A0:36:BC:3C:16:FD
▶ VLAN Configuration (MAC:A036BC3C16FD)
▶ MAC:A036BC3C16FD-IPv4 Network Configuration
▶ MAC:A036BC3C16FD-IPv6 Network Configuration
▶ Intel(R) Ethernet Controller X710 for 10GBASE-T -
  A0:36:BC:3C:16:FE
▶ VLAN Configuration (MAC:A036BC3C16FE)
▶ MAC:A036BC3C16FE-IPv4 Network Configuration
▶ MAC:A036BC3C16FE-IPv6 Network Configuration

[Enabled] Intel VMD feature
support , Intel VROC (NVMe
RAID) function enabled.
[Disabled] Intel VMD feature
does not support , Intel VROC
(NVMe RAID) function disabled.

→←: Select Screen
↑↓: Select Item
Enter: Select
+/-: Change Opt.
F1: General Help
F2: Previous Values
F5: Optimized Defaults
F10: Save Changes & Reset
F12: Print Screen
ESC: Exit

                 Version 2.22.1285 Copyright (C) 2022 AMI
```

AutoVMD [Enabled]

Configuration options: [Disabled] [Enabled]

4.5.1 Trusted Computing

```
                          Aptio Setup - AMI
                 Advanced

 Configuration
   Security Device Support                [Enable]
   NO Security Device Found

Enables or Disables BIOS
support for security device.
O.S. will not show Security
Device. TCG EFI protocol and
```

Configuration

Security Device Support [Enabled]

Configuration options: [Disabled] [Enabled]

4.5.2 ACPI Settings

```
Aptio Setup - AMI
Advanced

ACPI Settings                                   Enables or Disables BIOS ACPI
                                                Auto Configuration.
Enable ACPI Auto Configuration        [Disabled]
```

Enable ACPI Auto Configuration [Disabled]

Configuration options: [Disabled] [Enabled]

4.5.3 Redfish Host Interface Settings

```
Aptio Setup - AMI
Advanced

Redfish Host Interface Settings                 Enable/Disable AMI Redfish

Redfish                               [Disabled]
```

Redfish [Disabled]

Configuration options: [Disabled] [Enabled]

The following items appear only when **Redfish** is set to **[Enabled]**.

Authentication mode [Basic Authentication]

Allows you to select the authentication mode.
Configuration options: [Basic Authentication] [Session Authentication]

IP address

Allows you to enter the IP address.

IP Mask address

Allows you to enter the IP Mask address.

IP Port

Allows you to enter the IP Port.

4.5.4 Onboard LAN Configuration

```
Aptio Setup - AMI
Advanced

Onboard X710 LAN Configuration                  Onboard LAN Enable/Disable
```

Onboard I350/X710 LAN Configuration

LAN1/LAN2

LAN Enable [LAN1, LAN2 Enabled]

Configuration options: [Disabled] [LAN1 Enabled Only] [LAN1, LAN2 Enabled]

4.5.5 Serial Port Console Redirection

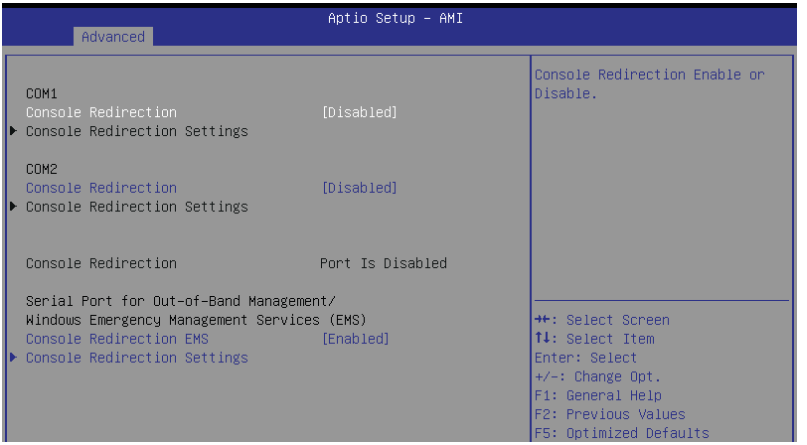

COM1/COM2

Console Redirection [Disabled]

Allows you to enable or disable the console redirection feature.
Configuration options: [Disabled] [Enabled]

The following item is available only when **Console Redirection** for **COM1** or **COM2** is set to **[Enabled]**.

Console Redirection Settings

These items become configurable only when you enable the **Console Redirection** item. The settings specify how the host computer and the remote computer (which the user is using) will exchange data. Both computers should have the same or compatible settings.

Terminal Type [ANSI]

Allows you to set the terminal type.

[VT100] ASCII char set.

[VT100Plus] Extends VT100 to support color, function keys, etc.

[VT-UTF8] Uses UTF8 encoding to map Unicode chars onto 1 or more bytes.

[ANSI] Extended ASCII char set.

Bits per second [115200]

Selects serial port transmission speed. The speed must be matched on the other side. Long or noisy lines may require lower speeds.
Configuration options: [9600] [19200] [38400] [57600] [115200]

Data Bits [8]

Configuration options: [7] [8]

Parity [None]

A parity bit can be sent with the data bits to detect some transmission errors. [Mark] and [Space] parity do not allow for error detection.

[None]	None
[Even]	Parity bit is 0 if the num of 1's in the data bits is even.
[Odd]	Parity bit is 0 if num of 1's in the data bits is odd.
[Mark]	Parity bit is always 1.
[Space]	Parity bit is always 0.

Stop Bits [1]

Stop bits indicate the end of a serial data packet. (A start bit indicates the beginning.) The standard setting is 1 stop bit. Communication with slow devices may require more than 1 stop bit.
Configuration options: [1] [2]

Flow Control [None]

Flow control can prevent data loss from buffer overflow. When sending data, if the receiving buffers are full, a "stop" signal can be sent to stop the data flow. Once the buffers are empty, a "start" signal can be sent to re-start the flow. Hardware flow control uses two wires to send start/stop signals.
Configuration options: [None] [Hardware RTS/CTS]

VT-UTF8 Combo Key Support [Enabled]

This allows you to enable the VT -UTF8 Combination Key Support for ANSI/VT100 terminals.
Configuration options: [Disabled] [Enabled]

Recorder Mode [Disabled]

With this mode enabled only text will be sent. This is to capture Terminal data.
Configuration options: [Disabled] [Enabled]

Resolution 100x31 [Enabled]

This allows you enable or disable extended terminal solution.
Configuration options: [Disabled] [Enabled]

Putty Keypad [VT100]

This allows you to select the FunctionKey and Keypad on Putty.
Configuration options: [VT100] [LINUX] [XTERMR6] [SCO] [ESCN] [VT400]

Serial Port for Out-of-Band Management/ Windows Emergency Management Services (EMS)

Console Redirection EMS [Enabled]

Allows you to enable or disable the console redirection feature.
Configuration options: [Disabled] [Enabled]

The following item is available only when **Console Redirection EMS** is set to **[Enabled]**.

Console Redirection Settings

Out-of-Band Mgmt Port [COM1]

Microsoft Windows Emergency Management Services (EMS) allow for remote management of a Windows Server OS through a serial port.
Configuration options: [COM1] [COM2]

Terminal Type EMS [VT-UTF8]

VT-UTF8 is the preferred terminal type for out0of-band management. The next best choice is VT100+, and then VT100. See above, in Console Redirection Settings page for more help with Terminal Type/Emulation.
Configuration options: [VT100] [VT100+] [VT-UTF8] [ANSI]

Bits per second EMS [115200]

Selects serial port transmission speed. The speed must be matched on the other side. Long or noisy lines may require lower speeds.
Configuration options: [9600] [19200] [57600] [115200]

Flow Control EMS [None]

Flow control can prevent data loss from buffer overflow. When sending data, if the receiving buffers are full, a “stop” signal can be sent to stop the data flow. Once the buffers are empty, a “start” signal can be sent to re-start the flow. Hardware flow control uses two wires to send start/stop signals.
Configuration options: [None] [Hardware RTS/CTS] [Software Xon/Xoff]

4.5.6 SIO Configuration

```
Aptio Setup - AMI
Advanced

AMI SIO Driver Version :   A5.17.00

Super IO Chip Logical Device(s) Configuration
▶ [*Active*]  Serial Port  1
▶ [*Active*]  Serial Port  2

WARNING: Logical Devices state on the left side of the
control, reflects the current Logical Device state. Changes
made during Setup Session will be shown after you restart
the system.

View and Set Basic properties
of the SIO Logical device.
Like IO Base, IRQ Range, DMA
Channel and Device Mode.
```

Logical Devices state on the left side of the control, reflects the current Logical Device state. Changes made during Setup Session will be shown after you restart the system.

[*Active*] Serial Port 1 / [*Active*] Serial Port 2

Allows you to view and set basic properties of the SIO Logical device.

Use This Device [Enabled]

Allows you to enable or disable this Logical Device.
Configuration options: [Disabled] [Enabled]

The following item appears only when **Use This Device** is set to **[Enabled]**.

Disabling SIO Logical Devices may have unwanted side effects. PROCEED WITH CAUTION.

Possible: [Use Automatic Settings]
Allows the user to change the device resource settings. New settings will be reflected no this setup page after system restarts.
Configuration options: [Use Automatic Settings] [IO=3F8h; IRQ=4; DMA;] [IO=3F8h; IRQ=3, 4, 5, 7, 9, 10, 11, 12; DMA;] [IO=2F8h; IRQ=3, 4, 5, 7, 9, 10, 11, 12; DMA;] [IO=3E8h; IRQ=3, 4, 5, 7, 9, 10, 11, 12; DMA;] [IO=2E8h; IRQ=3, 4, 5, 7, 9, 10, 11, 12; DMA;]

4.5.7 PCI Subsystem Settings

Allows you to configure PCI, PCI-X, and PCI Express Settings.

```
                                Aptio Setup - AMI
 Advanced

 PCI Bus Driver Version                A5.01.28                 Enables or Disables 64bit
                                                                capable Devices to be Decoded
 PCI Devices Common Settings:                                   in Above 4G Address Space
 Above 4G Decoding                     [Enabled]                (Only if System Supports 64
 Re-Size BAR Support                   [Disabled]               bit PCI Decoding).
 SR-IOV Support                        [Enabled]
 BME DMA Mitigation                    [Disabled]
```

Above 4G Decoding [Enabled]

Allows you to enable or disable 64-bit capable devices to be decoded in above 4G address space. It only works if the system supports 64-bit PCI decoding.
Configuration options: [Disabled] [Enabled]

Re-Size BAR Support [Disabled]

If system has Resizable BAR capable PCIe Devices, this option enables or disables Resizable BAR Support. (Only if system supports 64-bit PCI Decoding).
Configuration options: [Disabled] [Enabled]

SR-IOV Support [Enabled]

Allows you to enable or disable Single Root IO Virtualization Support if the system has SR-IOV capable PCIe devices.
Configuration options: [Disabled] [Enabled]

BME DMA Mitigation [Disabled]

Allows you to re-enable the Bus Master Attribute disabled during PCI enumeration for PCI bridges after SMM lock.
Configuration options: [Disabled] [Enabled]

4.5.8 USB Configuration

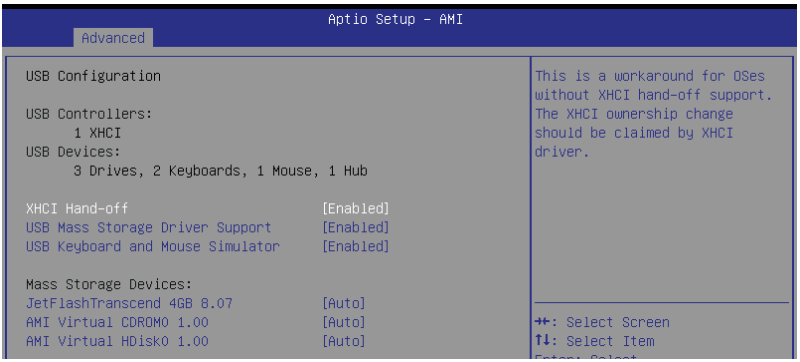

XHCI Hand-off [Enabled]

Allows you to enable or disable workaround for OSes without XHCI hand-off support. The XHCI ownership change should be claimed by XHCI driver.
Configuration options: [Enabled] [Disabled]

USB Mass Storage Driver Support [Enabled]

Allows you to enable or disable the USB Mass Storage driver support.
Configuration options: [Disabled] [Enabled]

USB Keyboard and Mouse Simulator [Enabled]

Allows you to enable or disable simulation of a USB keyboard and mouse for the PS/2 module in Windows 7. Ensure that the appropriate USB drivers are installed before this option is disabled.
Configuration options: [Disabled] [Enabled]

Mass Storage Devices

Allows you to select the mass storage device emulation type for devices connected.
Configuration options: [Auto] [Floppy] [Forced FDD] [Hard Disk] [CD-ROM]

4.5.9 Network Stack Configuration

```
Aptio Setup - AMI
Advanced

Network Stack                    [Enabled]        Enable/Disable UEFI Network
IPv4 PXE Support                 [Disabled]       Stack
IPv4 HTTP Support                [Disabled]
IPv6 PXE Support                 [Disabled]
IPv6 HTTP Support                [Disabled]
PXE boot wait time               0
Media detect count               1
```

Network Stack [Enabled]

Enables or disables the UEFI network stack.
Configuration options: [Disabled] [Enabled]

The following items appear only when **Network Stack** is set to **[Enabled]**.

IPv4 PXE Support [Disabled]

Enables or disables the IPv4 PXE Boot Support. If disabled, IPv4 PXE boot support will not be available.
Configuration options: [Disabled] [Enabled]

IPv4 HTTP Support [Disabled]

Enables or disables the IPv4 HTTP Boot Support. If disabled, IPv4 HTTP boot support will not be available.
Configuration options: [Disabled] [Enabled]

IPv6 PXE Support [Disabled]

Enables or disables the IPv6 PXE Boot Support. If disabled, IPv6 PXE boot support will not be available.
Configuration options: [Disabled] [Enabled]

IPv6 HTTP Support [Disabled]

Enables or disables the IPv6 HTTP Boot Support. If disabled, IPv6 HTTP boot support will not be available.
Configuration options: [Disabled] [Enabled]

PXE boot wait time [0]

Set the wait time to press ESC key to abort the PXE boot. Use the <+> or <-> to adjust the value. The values range from 0 to 5.

Media detect count [1]

Set the number of times presence of media will be checked. Use the <+> or <-> to adjust the value. The values range from 1 to 50.

4.5.10 NVMe Configuration

This page will display the NVMe controller and drive information.

Device

The devices and names shown in the NVMe configuration list depends on the connected devices. If no devices are connected, **No NVMe Device Found** will be displayed.

Self Test Option [Short]

This option allows you to select either Short or Extended Self Test. Short option will take couple of minutes, and the extended option will take several minutes to complete.
Configuration options: [Short] [Extended]

Self Test Action [Controller Only Test]

This item allows you to select either to test Controller alone or Controller and NameSpace. Selecting Controller and Namespace option will take a lot longer to complete the test.
Configuration options: [Controller Only Test] [Controller and NameSpace Test]

Run Device Self Test

Press <Enter> to perform device self test for the corresponding Option and Action selected by the user. Pressing the <ESC> key will abort the test. The results shown below is the most recent result logged in the device.

4.5.11 APM Configuration

This page will allow you to configure the Advanced Power Management (APM) settings.

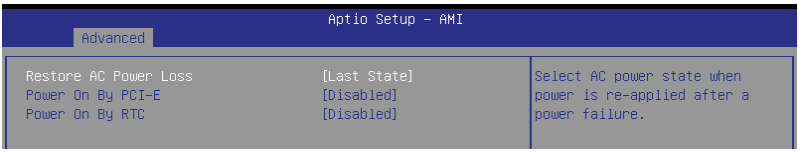

Restore AC Power Loss [Last State]

When set to **[Power Off]**, the system goes into off state after an AC power loss. When set to **[Power On]**, the system will reboot after an AC power loss. When set to **[Last State]**, the system goes into either off or on state, whatever the system state was before the AC power loss.
Configuration options: [Power Off] [Power On] [Last State]

Power On By PCI-E [Disabled]

[Disabled] Disables wake events from PCI-E devices.

[Enabled] Enables wake evens from PCI-E devices.

Power On By RTC [Disabled]

[Disabled] Disables RTC to generate a wake event.

[Enabled] When set to **[Enabled]**, the items **RTC Alarm Date (Days)** and **Hour/Minute/Second** will become user-configurable with set values.

4.5.12 T1s Auth Configuration

Allows you to configure the Server Certificate Authority (CA).

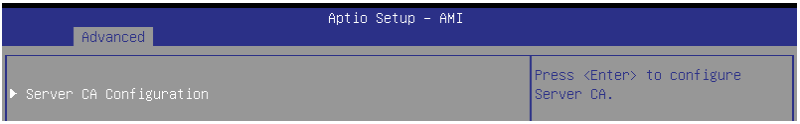

Enroll Cert

Allows you to enroll a certificate using a certificate file or manually input a certificate GUID.

Enroll Cert Using File

Allows you to enroll a certificate using a certificate file. You will be prompted to select a storage device and navigate to the location of the certificate file.

Cert GUID

Allows you to enroll a certificate by manually inputting the certificate GUID.

Commit Changes and Exit

Exit Server CA configuration after saving the changes.

Discard Changes and Exit

Exit Server CA configuration without saving any changes.

Delete Cert

Allows you to delete the certificate.

4.5.13 Third-party UEFI driver configurations

Additonal configuration options for third-party UEFI drivers installed to the system will appear in the section marked in red in the screenshot below.

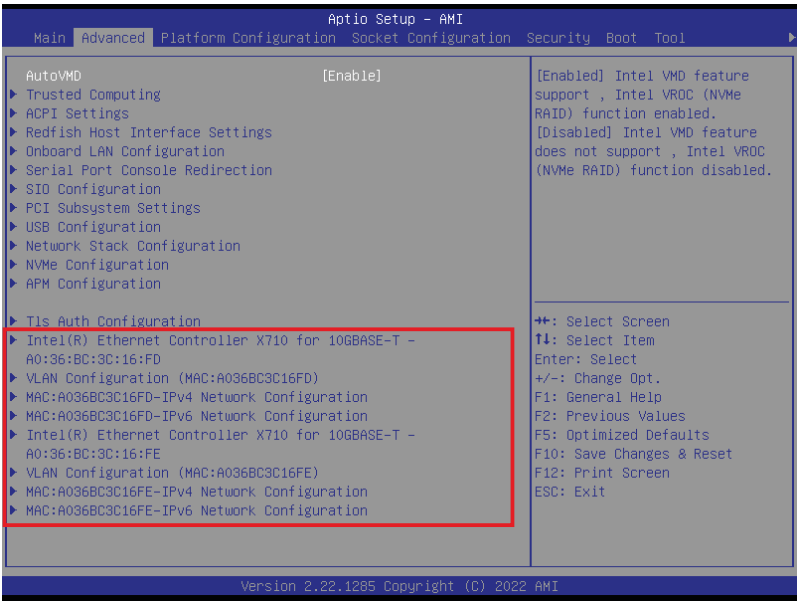

4.6 Platform Configuration menu

The Platform Configuration menu items allow you to change the platform settings.

Setting items in this menu to incorrect values may cause the system to malfunction!

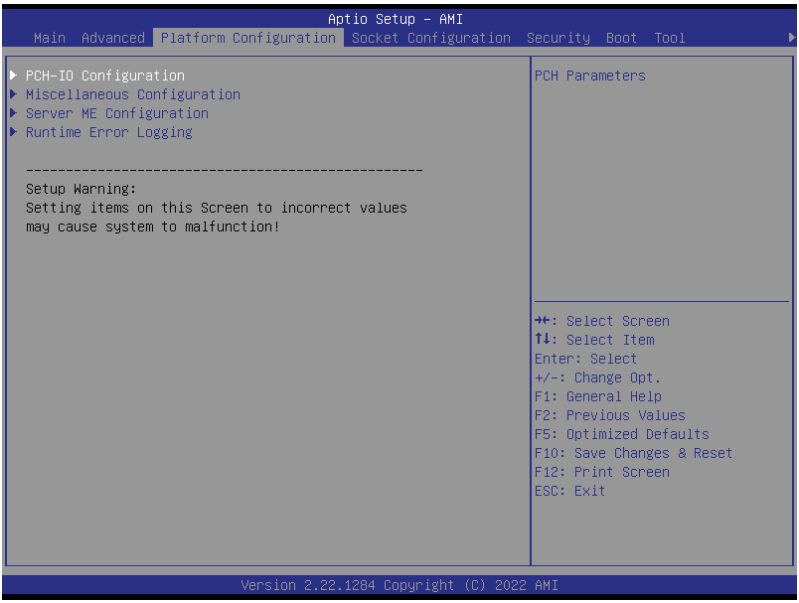

4.6.1 PCH-IO Configuration

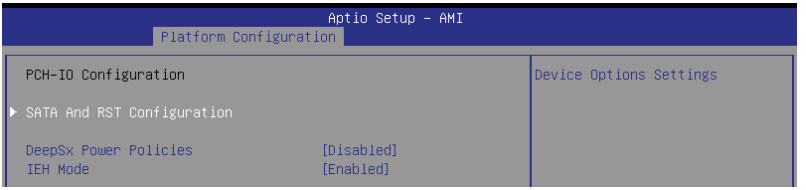

SATA And RST Configuration

Allows you to configure SATA and RST settings.

DeepSx Power Policies [Disabled]

Allows you to configure the DeepSx power policy.

Configuration options: [Disabled] [Enabled in S5]

IEH Mode [Enabled]

Allows you to enable or bypass Interrupt Error Handling (IEH).

Configuration options: [Bypass Mode] [Enabled]

4.6.2 Miscellaneous Configuration

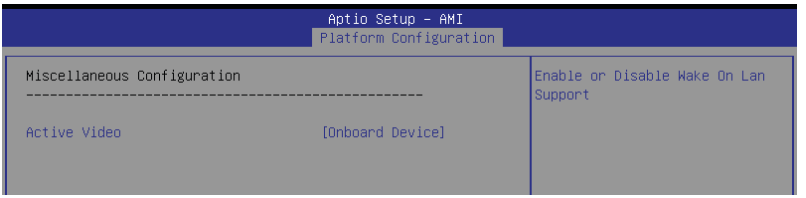

Active Video [Auto]

Allows you to select the active video type.
Configuration options: [Auto] [Onboard Device] [PCIE Device]

4.6.3 Server ME Configuration

Displays the Server ME Technology parameters on your system. Scroll using <Page Up> / <Page Down> keys to see more items.

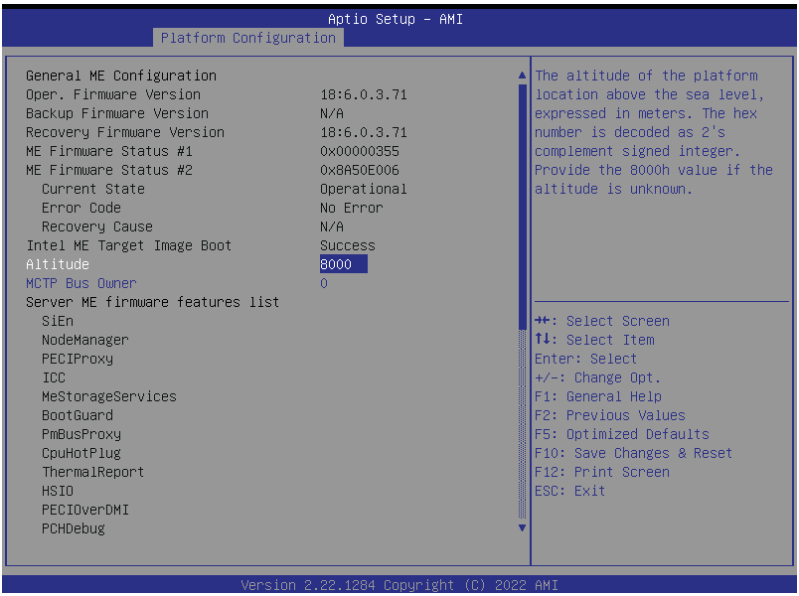

Altitude [8000]

Allows you to set the altitude of the platform location above the sea level, expressed in meters. The hex number is decoded as 2's complement signed integer. Provide the 8000h value if the altitude is unknown.

MCTP Bus Owner [0]

Allows you to enter the MCTP bus owner location on PCIe: [15:8] bus, [7:3] device, [2:0] function. If all zeros, sending bus owner will be disabled.

4.6.4 Runtime Error Logging Support

System Errors [Enable]

Allows you to enable or disable System Errors setup options.
Configuration options: [Disable] [Enable]

The following item is available only when **System Errors** is set to **[Enabled]**.

Whea Settings

Allows you to configure Whea settings.

4.7 Socket Configuration menu

The Socket Configuration menu items allow you to change the socket settings.

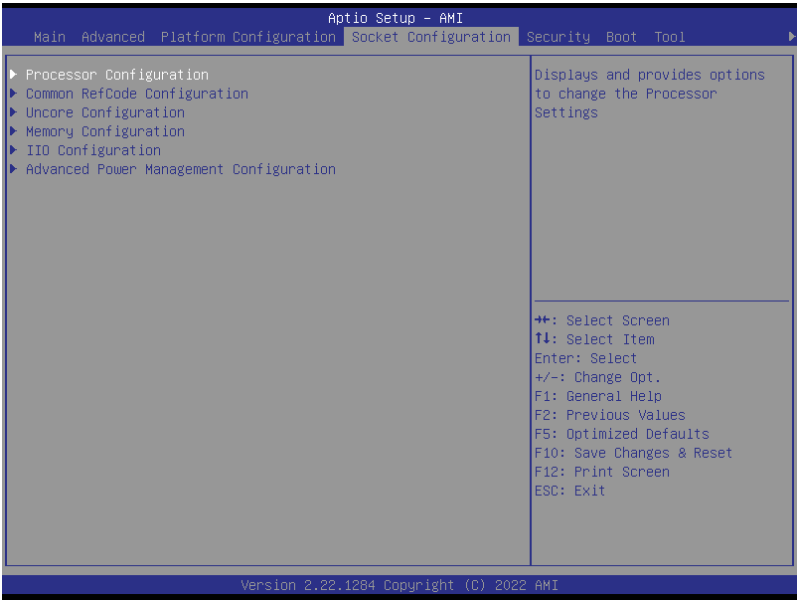

4.7.1 Processor Configuration

```
Aptio Setup - AMI
Socket Configuration

Processor Configuration                          Change Per-Socket Settings
-----------------------------------------------
▶ Per-Socket Configuration
Processor BSP Revision          806F3 - SPR-SP Dx
Processor Socket                Socket 0     Socket 1
Processor ID                    000806F3* |     N/A
Processor Frequency             1.500GHz  |     N/A
Processor Max Ratio                 0FH   |     N/A
Processor Min Ratio                 08H   |     N/A
Microcode Revision              0D0004B1  |     N/A
L1 Cache RAM(Per Core)              80KB  |     N/A
L2 Cache RAM(Per Core)            2048KB  |     N/A
L3 Cache RAM(Per Package)        92160KB  |     N/A
Processor 0 Version             Genuine Intel(R) CPU 00
                                00%@

Hyper-Threading                 [Enabled]        →←: Select Screen
IED Trace memory                [Disable]        ↑↓: Select Item
Skip Flex Ratio Override        [Disabled]       Enter: Select
Check CPU BIST Result           [Enabled]        +/-: Change Opt.
3StrikeTimer                    [Enable]         F1: General Help
Fast String                     [Enable]         F2: Previous Values
Machine Check                   [Enable]         F5: Optimized Defaults
Hardware Prefetcher             [Enable]         F10: Save Changes & Reset
L2 RFO Prefetch Disable         [Disable]        F12: Print Screen
                                                 ESC: Exit
```

Per-Socket Configuration

Allows you to configure per-socket settings.

Hyper Threading [Enabled]

Allows you to enable or disable the Hyper-Threading Technology function. When disabled, only one thread per activated core is enabled. This is the software method to enable or disable Logical Processor threads.
Configuration options: [Disabled] [Enabled]

IED Trace Memory [Disabled]

Allows you to allocate memory for PSMI trace.

Configuration options: [Disabled] [4M] [8M] [16M] [32M] [64M] [128M] [256M] [512M] [1G]

Skip Flex Ratio Override [Disabled]

Allows you to skip flex ratio overrides to use power-on default flex ratio values. In multi-socket systems, this will allow mixed flex ratio limits.

Configuration options: [Disabled] [Enabled]

Check CPU BIST Result [Enabled]

Allows you to check or ignore BIST results. If enabled, cores with failed BIST results will be disabled.

Configuration options: [Disabled] [Enabled]

3StrikeTimer [Enabled]

Allows you to enable or disable the 3 strike counter.

Configuration options: [Disabled] [Enabled]

Fast String [Enabled]

Allows you to enable or disable fast strings for REP MOVS/STOS.

Configuration options: [Disabled] [Enabled]

Machine Check [Enabled]

Allows you to enable or disable the machine check.

Configuration options: [Disabled] [Enabled]

Hardware Prefetcher [Enabled]

Allows you to enable or disable the hardware prefetcher.

Configuration options: [Disabled] [Enabled]

L2 RFO Prefetch Disable [Disabled]

Allows you to turn enable or disable L2 RFO prefetcher.
Configuration options: [Disabled] [Enabled]

Adjacent Cache Prefetch [Enabled]

Allows you to enable or disable prefetching of adjacent cache lines.
Configuration options: [Disabled] [Enabled]

DCU Streamer Prefetcher [Enabled]

Allows you to enable or disable prefetcher of next L1 data line.
Configuration options: [Disabled] [Enabled]

DCU IP Prefetcher [Enabled]

Allows you to enable or disable prefetch of next L1 line based upon sequential load history.
Configuration options: [Disabled] [Enabled]

LLC Prefetch [Disabled]

Allows you to enable or disable LLC Prefetch on all threads.
Configuration options: [Disabled] [Enabled]

Homeless Prefetch [Auto]

Allows you to enable or disable Homeless Prefetch on all threads.
Configuration options: [Disabled] [Enabled] [Auto]

DCU Mode [Normal]

[Normal]	The whole DCU is used for caching.
[Mirror-Mode]	DCU is organized as 2x16KB mirrored copies.

AMP Prefetch [Disabled]

Allows you to enable or disable AMP Prefetch.
Configuration options: [Disabled] [Enabled]

Extended APIC [Enabled]

Allows you to enable or disable the extended APIC support.
Configuration options: [Disabled] [Enabled]

Enabling Extended APIC will automatically enable VT-d and Interrupt Remapping.

APIC Physical Mode [Disabled]

Allows you to enable or disable the APIC physical destination mode.
Configuration options: [Disabled] [Enabled]

PECI Trust Mode [Use per-PECI agent trust mode]

Allows you to select the PECI trust mode

Configuration options: [All PECI Agents untrusted] [All PECI Agents trusted] [Use per-PECI agent trust mode]

The following items are available only when **PECI Trust Mode** is set to **[Use per-PECI agent trust mode]**.

Legacy Agent [Enabled]

Allows you to enable or disable legacy agent trust.

Configuration options: [Disabled] [Enabled]

SMBus Agent [Disabled]

Allows you to enable or disable SMBus agent trust.

Configuration options: [Disabled] [Enabled]

IE Agent [Enabled]

Allows you to enable or disable IE agent trust.

Configuration options: [Disabled] [Enabled]

Generic Agent [Disabled]

Allows you to enable or disable generic agent trust.

Configuration options: [Disabled] [Enabled]

eSPI Agent [Disabled]

Allows you to enable or disable eSPI agent trust.

Configuration options: [Disabled] [Enabled]

DfxRedManu Agent [Disabled]

Allows you to enable or disable DfxRedManu agent trust.

Configuration options: [Disabled] [Enabled]

DfxOrange Agent [Disabled]

Allows you to enable or disable DfxOrange agent trust.

Configuration options: [Disabled] [Enabled]

DBP-F [Disabled]

Allows you to enable or disable DBP-F.
Configuration options: [Disabled] [Enabled]

IIO LLC Ways [14:0] (Hex) [0]

Allows you to set the bitmask for IIO LLC Ways. All bits set in the mask must be contiguous.

SMM Blocked and Delayed [Disabled]

Allows you to enable or disable SMM Blocked and Delayed.
Configuration options: [Disabled] [Enabled]

eSMM Save State [Disabled]

Allows you to enable or disable the eSMM save state feature.
Configuration options: [Disabled] [Enabled]

Smbus Error Recovery [Enabled]

Allows you to enable or disable Smbus Error Recovery.
Configuration options: [Disabled] [Enabled]

Intel(R) TXT [Disabled]

Allows you to enable or disable Intel® TXT.

Configuration options: [Disabled] [Enabled]

VMX [Enabled]

Allows you to enable or disable Vanderpool Technology.
Configuration options: [Disabled] [Enabled]

Enable SMX [Disabled]

Allows you to enable or disable Safer Mode Extensions.
Configuration options: [Disabled] [Enabled]

Lock Chipset [Enabled]

Allows you to lock or unlock the chipset.
Configuration options: [Disabled] [Enabled]

MSR Lock Control [Enabled]

Allows you to lock or unlock MSR 3Ah and CSR 80h.
Configuration options: [Disabled] [Enabled]

PPIN Control [Unlock/Enabled]

Allows you to enable or disable PPIN Control.
Configuration options: [Lock/Disabled] [Unlock/Enabled]

AES-NI [Enabled]

Allows you to enable or disable the AES-NI support.
Configuration options: [Disabled] [Enabled]

TME, TME-MT, TDX

Total Memory Encryption (TME) [Disabled]

Allows you to enable or disable Total Memory Encryption (TME).
Configuration options: [Disabled] [Enabled]

The following item appears only when **Total Memory Encryption (TME)** is set to **[Enabled]**.

Total Memory Encryption (TME) Bypass [Auto]
Allows you to configure Total Memory Encryption (TME) Bypass.

Configuration options: [Auto] [Disabled] [Enabled]

Software Guard Extension (SGX)

The following items are available only when **Total Memory Encryption (TME)** is set to **[Enabled]**.

SGX Factory Reset [Disabled]
Allows you to factory reset SGX and reset all SGX BIOS knobs to default values.

SW Guard Extensions (SGX) [Disabled]
Allows you to enable or disable Software Guard Extensions (SGX)

Configuration options: [Disabled] [Enabled]

SGX Package Info In-Band Access [Disabled]
Allows you to enable or disable Software Guard Extensions (SGX) Package Info In-band Access.

Configuration options: [Disabled] [Enabled]

In Field Scan (IFS)

Allows you to configure In Field Scan settings.

PSMI Configuration

Allows you to configure PSMI settings.

Processor CFR Configuration

Allows you to configure Processor CFR settings.

4.7.2 Common RefCode Configuration

```
Aptio Setup - AMI
Socket Configuration

Common RefCode Configuration                    | Divide physical NUMA nodes
-------------------------------------------------| into evenly sized virtual NUMA
Numa                                [Enable]     | nodes in ACPI table. This may
-------------------------------------------------| improve Windows performance on
Uniform Memory Access (UMA) cannot be enabled with the | CPUs with more than 64 logical
current system configuration                     | processors.
-------------------------------------------------|
Virtual Numa                        [Disable]    |
```

Virtual Numa [Disabled]

Allows you to enable or disable virtual non-uniform memory access (NUMA).
Configuration options: [Disabled] [Enabled]

UMA-Based Clustering [Quadrant (4-Clusters)]

Allows you to set the UMA-based clustering mode.

Configuration options: [Hemisphere (2-clusters)] [Quadrant (4-clusters)]

4.7.3 Uncore Configuration

```
Aptio Setup - AMI
Socket Configuration

Uncore Configuration                             | Displays and provides option
-------------------------------------------------| to change the Uncore General
▶ Uncore General Configuration                   | Settings
▶ Uncore Per Socket Configuration                |
```

Uncore General Configuration

Allows you to configure Uncore General settings.

Uncore Per Socket Configuration

Allows you to configure Uncore Per Socket settings.

4.7.4 Memory Configuration

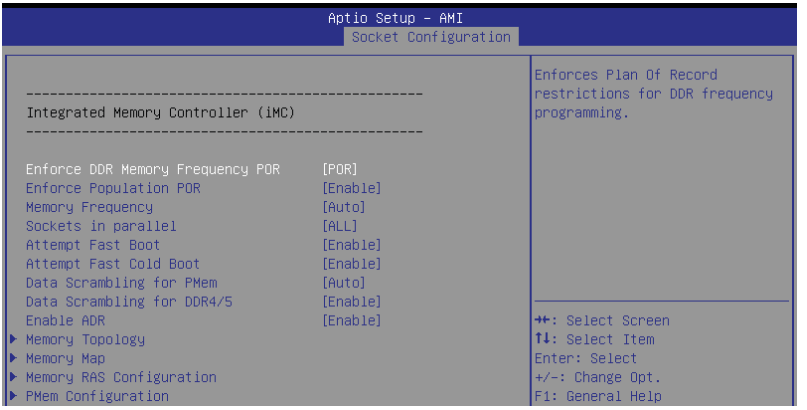

Enforce DDR Memory Frequency POR [POR]

Allows you to enforce POR restrictions for DDR frequency and voltage programming. If this item is disabled, system memory can be run at frequencies higher than the memory supports, specified in the Memory Frequency field (limited by processor support).
Configuration options: [POR] [Disabled]

Enforce Population POR [Enabled]

Allows you to enforce POR restrictions for memory population.

Configuration options: [Disabled] [Enabled]

Memory Frequency [Auto]

Allows you to set the maximum memory frequency in MHz. If Enforce POR is disabled, system memory can be run at frequencies higher than the memory supports (limited by processor support).

Configuration options: [Auto] [3200] [3600] [4000] [4400] [4800]

Sockets in Parallel [All]

Allows you to set the number of sockets operating in parallel.

Configuration options: [All] [1] [2] [4]

Attempt Fast Boot [Enabled]

Allows you to enable or disable fast boot. Portions of memory reference code will be skipped when possible to increase boot speed on warm boots.

Configuration options: [Disabled] [Enabled]

Attempt Fast Cold Boot [Enabled]

Allows you to enable or disable fast cold boot. Portions of memory reference code will be skipped when possible to increase boot speed on cold boots.

Configuration options: [Disabled] [Enabled]

Data Scrambling for PMem [Auto]

Allows you to enable or disable data scrambling for PMem. If set to Auto, data scrambling will be enabled or disabled depending on stepping.

Configuration options: [Disabled] [Enabled] [Auto]

Data Scrambling for DDR4/5 [Enabled]

Allows you to enable or disable data scrambling for DDR4/5.

Configuration options: [Disabled] [Enabled]

Enable ADR [Enabled]

Allows you to enable or disable ADR. Automatically enabled if fADR is enabled.

Configuration options: [Disabled] [Enabled]

Outlier Check Disable [Enabled]

Configuration options: [Disabled] [Enabled]

Memory Topology

Displays memory topology with DIMM population information.

Memory Map

Allows you to configure memory mapping settings.

Memory RAS Configuration

Allows you to configure memory RAS settings.

PMem Configuration

Allows you to configure PMem settings.

4.7.5 IIO Configuration

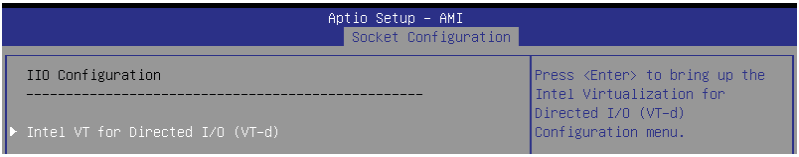

Intel(R) VT for Directed I/O (VT-d)

Intel(R) VT for Directed I/O (VT-d) [Enabled]

Allows you to enable or disable the Intel Virtualization Technology for Directed I/O (VT-d) by reporting the I/O device assignment to VMM through DMAR ACPI Tables.
Configuration options: [Disabled] [Enabled]

4.7.6 Advanced Power Management Configuration

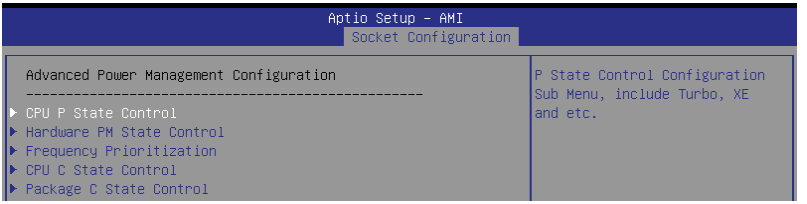

CPU P State Control

Allows you to configure CPU P State Control settings.

Hardware PM State Control

Allows you to configure Hardware PM State Control settings.

Frequency Prioritization

Allows you to configure Frequency Prioritization settings.

CPU C State Control

Allows you to configure CPU C State Control settings.

Package C State Control

Allows you to configure Package C State Control settings.

4.8 Security menu

This menu allows a new password to be created or a current password to be changed. The menu also enables or disables the Secure Boot state and lets the user configure the System Mode state.

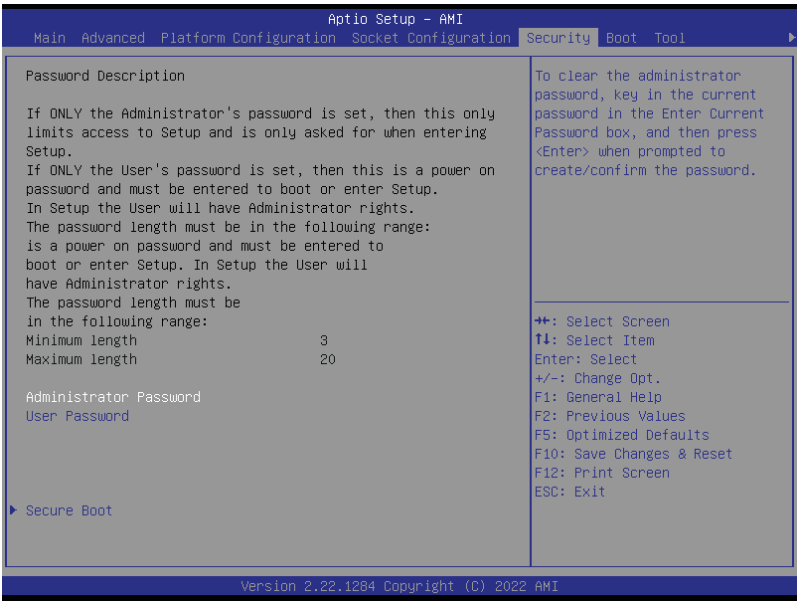

Administrator Password

To set an administrator password:

1. Select the Administrator Password item and press <Enter>.
2. From the Create New Password box, key in a password, then press <Enter>.
3. Confirm the password when prompted.

To change an administrator password:

1. Select the Administrator Password item and press <Enter>.
2. From the Enter Current Password box, key in the current password, then press <Enter>.
3. From the Create New Password box, key in a new password, then press <Enter>.
4. Confirm the password when prompted.

To clear the administrator password, follow the same steps as in changing an administrator password, but press <Enter> when prompted to create/confirm the password.

User Password

To set a user password:

1. Select the User Password item and press <Enter>.
2. From the Create New Password box, key in a password, then press <Enter>.
3. Confirm the password when prompted.

To change a user password:

1. Select the User Password item and press <Enter>.
2. From the Enter Current Password box, key in the current password, then press <Enter>.
3. From the Create New Password box, key in a new password, then press <Enter>.
4. Confirm the password when prompted.

To clear a user password:

1. Select the Clear User Password item and press <Enter>.
2. Select **Yes** from the Warning message window, then press <Enter>.

Secure Boot

Secure Boot [Disabled]

Secure Boot can be enabled if the system is running in User mode with enrolled platform Key (EPK) or if the CSM function is disabled.
Configuration options: [Disabled] [Enabled]

Secure Boot Mode [Custom]

Allows you to set the Secure Boot selector.
Configuration options: [Standard] [Custom]

Install Default Secure Boot Keys

Allows you to load the default secure boot keys.

Clear Secure Boot Keys

Allows you to delete all previously applied secure boot keys.

Key Management

Allows you to configure Key Management options.

4.9 Boot menu

The Boot menu items allow you to change the system boot options.

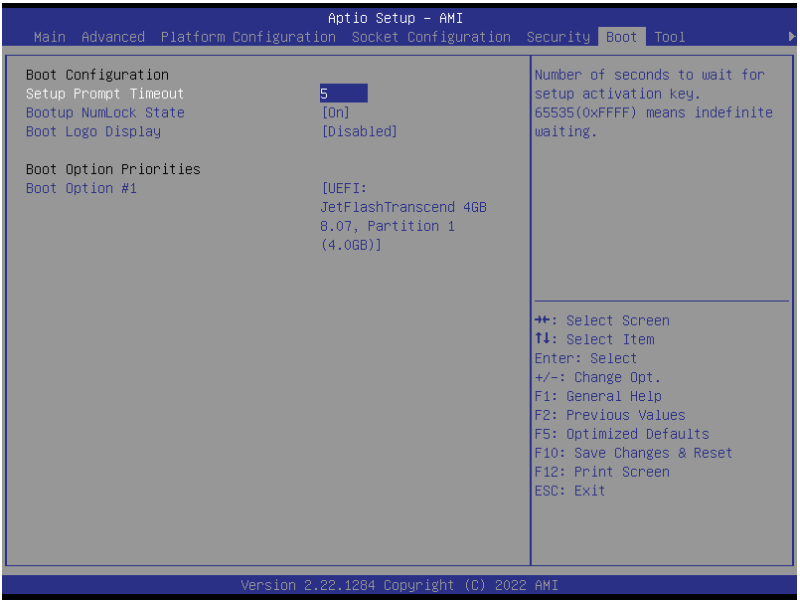

Setup Prompt Timeout [5]

Allows you to set the number of seconds that the firmware waits before initiating the original default boot selection. 65535(OxFFFF) means indefinite waiting. Use the <+> or <-> to adjust the value.

Bootup NumLock State [On]

Allows you to select the power-on state for the NumLock.
Configuration options: [Off] [On]

Boot Logo Display [Disabled]

[Disabled]	Hide the logo during POST.
[Enabled]	Display the logo during POST.

Boot Option Priorities

These items specify the boot device priority sequence from the available devices. The number of device items that appears on the screen depends on the number of devices installed in the system.

To select the boot device during system startup, press <F11> when logo appears.

4.10 Tool menu

The Tool menu items allow you to configure options for special functions. Select an item, then press <Enter> to display the submenu.

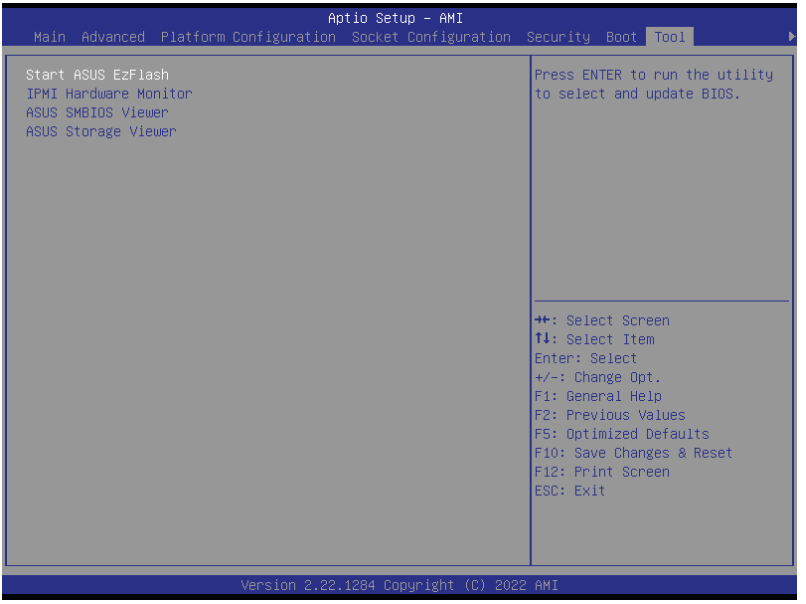

Start ASUS EzFlash

Allows you to start the ASUS EzFlash BIOS ROM Utility. Refer to the ASUS EzFlash Utility section for details.

IPMI Hardware Monitor

Allows you to start the IPMI hardware monitor.

ASUS SMBIOS Viewer

Allows you to start the ASUS SMBIOS Viewer.

ASUS Storage Viewer

Allows you to start the ASUS Storage Viewer.

4.11 Event Logs menu

The Event Logs menu items allow you to change the event log settings and view the system event logs.

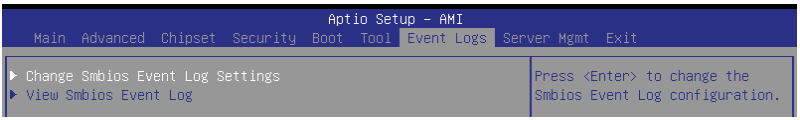

4.11.1 Change Smbios Event Log Settings

Press <Enter> to change the Smbios Event Log configuration.

All values changed here do not take effect until computer is restarted.

Smbios Event Log [Enabled]

Change this to enable or disable all features of Smbios Event Logging during boot.
Configuration options: [Disabled] [Enabled]

The following item appears only when **Smbios Event Log** is set to **[Enabled]**.

Erase Event Log [No]

Choose options for erasing Smbios Event Log. Erasing is done prior to any logging activation during reset.
Configuration options: [No] [Yes, Next reset] [Yes, Every reset]

When Log is Full [Do Nothing]

Choose options for reactions to a full Smbios Event Log.
Configuration options: [Do Nothing] [Erase Immediately]

Log EFI Status Code [Enabled]

This option allows you to enable or disable logging of the EFI Status Codes.
Configuration options: [Disabled] [Enabled]

The following item appears only when **Log EFI Status Code** is set to **[Enabled]**.

Convert EFI Status Codes to Standard Smbios Type [Disabled]
This option allows you to enable or disable converting of EFI Status Codes to Standard Smbios Type (Not all may be translated).
Configuration options: [Disabled] [Enabled]

4.11.2 View Smbios Event Log

Press <Enter> to view all smbios event logs.

4.12 Server Mgmt menu

The Server Management menu displays the server management status and allows you to change the settings.

```
                              Aptio Setup - AMI
◀ Event Logs  Server Mgmt  Exit

  BMC Self Test Status                PASSED
  BMC Device ID                       32
  BMC Device Revision                 81
  BMC Firmware Revision               1.01.01
  IPMI Version                        2.0

  OS Watchdog Timer                   [Disabled]
  OS Wtd Timer Timeout                10
  OS Wtd Timer Policy                 [Reset]
  Serial Mux                          [Disabled]

▶ System Event Log
▶ View FRU information
▶ BMC network configuration
▶ View System Event Log

If enabled, starts a BIOS
timer which can only be shut
off by Management Software
after the OS loads.  Helps
determine that the OS
successfully loaded or follows
the OS Boot Watchdog Timer
policy.

→←: Select Screen
↑↓: Select Item
Enter: Select
+/-: Change Opt.
F1: General Help
F2: Previous Values
F5: Optimized Defaults
F10: Save Changes & Reset
F12: Print Screen
ESC: Exit

                 Version 2.22.1285 Copyright (C) 2022 AMI
```

OS Watchdog Timer [Disabled]

This item allows you to start a BIOS timer which can only be shut off by Management Software after the OS loads.
Configuration options: [Enabled] [Disabled]

The following items appear only when **OS Watchdog Timer** is set to **[Enabled]**.

OS Wtd Timer Timeout [10]

Enter the value between 1 to 30 minutes to configure the length fo the OS Boot Watchdog Timer.

OS Wtd Timer Policy [Reset]

This item allows you to configure the how the system should respond if the OS Boot Watch Timer expires.
Configuration options: [Do Nothing] [Reset] [Power Down] [Power Cycle]

Serial Mux [Disabled]

Configuration options: [Enabled] [Disabled]

4.12.1 System Event Log

Allows you to change the SEL event log configuration.

SEL Components [Enabled]

Allows you to enable or disable event logging for error/progress codes during boot.
Configuration options: [Disabled] [Enabled]

The following item appears only when **SEL Components** is set to **[Enabled]**.

Erase SEL [No]

Allows you to choose options for erasing SEL.
Configuration options: [No] [Yes, On next reset] [Yes, On every reset]

4.12.2 View FRU Information

Allows you to view FRU information.

4.12.3 BMC network configuration

The sub-items in this configuration allow you to configure the BMC network parameters.

DM_LAN/Shared LAN

Configuration Address source [Unspecified]

Configuration options: [Unspecified] [Static] [DynamicBmcDhcp]

IPv6 Support [Enabled]

Configuration options: [Enabled] [Disabled]

The following items appear only when **IPv6 Support** is set to **[Enabled]**.

Configuration Address source [Unspecified]
Configuration options: [Unspecified] [Static] [DynamicBmcDhcp]

Configuration Router Lan1/Lan2 Address source [Unspecified]
Configuration options: [Unspecified] [Static] [DynamicBmcDhcp]

4.12.4 View System Event Log

This item allows you to view the system event log records.

4.13 Save & Exit menu

The Save & Exit menu items allow you to save or discard your changes to the BIOS items.

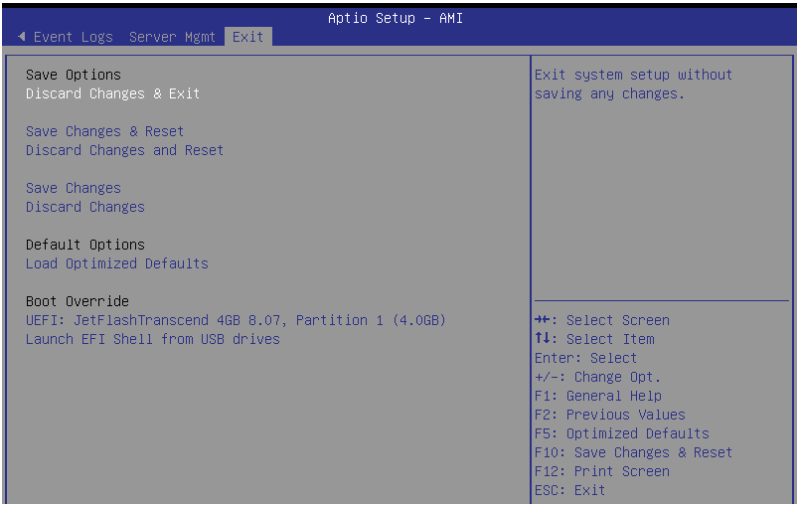

Pressing <Esc> does not immediately exit this menu. Select one of the options from this menu or <F10> from the legend bar to exit.

Discard Changes and Exit

Exit system setup without saving any changes.

Save Changes and Reset

Reset system after saving the changes.

Discard Changes and Reset

Reset system setup without saving any changes.

Save Changes

Save changes done so far to any of the setup options.

Discard Changes

Discard changes done so far to any of the setup options.

Load Optimized Defaults

Restore/load default values for all the setup options.

Boot Override

These items displays the available devices. The device items that appears on the screen depends on the number of devices installed in the system. Click an item to start booting from the selected device.

RAID Configuration

5

This chapter provides instructions for setting up, creating, and configuring RAID sets using the available utilities.

5.1 Setting up RAID

The motherboard supports the **Intel® Rapid Storage Technology enterprise Option ROM Utility** with RAID 0, RAID 1, RAID 10, and RAID 5 support (for Windows OS and Linux).

5.1.1 RAID definitions

RAID 0 (Data striping) optimizes two identical hard disk drives to read and write data in parallel, interleaved stacks. Two hard disks perform the same work as a single drive but at a sustained data transfer rate, double that of a single disk alone, thus improving data access and storage. Use of two new identical hard disk drives is required for this setup.

RAID 1 (Data mirroring) copies and maintains an identical image of data from one drive to a second drive. If one drive fails, the disk array management software directs all applications to the surviving drive as it contains a complete copy of the data in the other drive. This RAID configuration provides data protection and increases fault tolerance to the entire system. Use two new drives or use an existing drive and a new drive for this setup. The new drive must be of the same size or larger than the existing drive.

RAID 10 is data striping and data mirroring combined without parity (redundancy data) having to be calculated and written. With the RAID 10 configuration you get all the benefits of both RAID 0 and RAID 1 configurations. Use four new hard disk drives or use an existing drive and three new drives for this setup.

RAID 5 stripes both data and parity information across three or more hard disk drives. Among the advantages of RAID 5 configuration include better HDD performance, fault tolerance, and higher storage capacity. The RAID 5 configuration is best suited for transaction processing, relational database applications, enterprise resource planning, and other business systems. Use a minimum of three identical hard disk drives for this setup.

If you want to boot the system from a hard disk drive included in a created RAID set, copy first the RAID driver from the support DVD to a floppy disk before you install an operating system to the selected hard disk drive.

5.1.2 Installing hard disk drives

The motherboard supports Serial ATA and NVMe for RAID set configuration. For optimal performance, install identical drives of the same model and capacity when creating a disk array.

To install the SATA or NVMe hard disks for RAID configuration, please refer to the **Storage devices** section for more information.

5.1.3 RAID configuration utilities

Depending on the RAID connectors that you use, you can create a RAID set using the utilities embedded in each RAID controller. For example, use the **Intel® Rapid Storage Technology** if you installed Serial ATA hard disk drives on the Serial ATA connectors supported by the chipset.

Refer to the succeeding section for details on how to use the RAID configuration utility.

5.2 Intel® Virtual Raid on CPU in BIOS

This feature allows you to do CPU RAID functions with Intel® CPU RSTe.

- Due to chipset behavior, enabling the Intel® RSTe CPU RAID functions requires an Intel® VROC hardware key module.
- Refer to the **Internal connectors** section for the location of the VROC_KEY1 connector.
- The KEY module is purchased separately.

To enter the Intel® Virtual Raid on CPU in BIOS:

1. Enter the BIOS Setup during POST.
2. Go to the **Advanced** menu **> Intel(R) Virtual Raid on CPU** > **All Intel VMD Controllers**, then press <Enter> to display the Intel® Virtual Raid on CPU menu.

Refer to the **BIOS Setup** chapter for details on entering and navigating through the BIOS Setup.

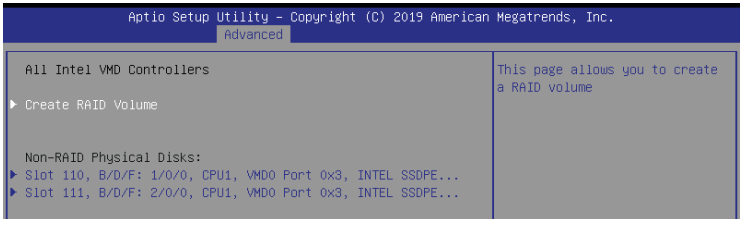

5.2.1 Creating a RAID set

To create a RAID set:

1. From the Intel® Virtual Raid on CPU menu, select **Create RAID Volume** and press <Enter>. The following screen appears:

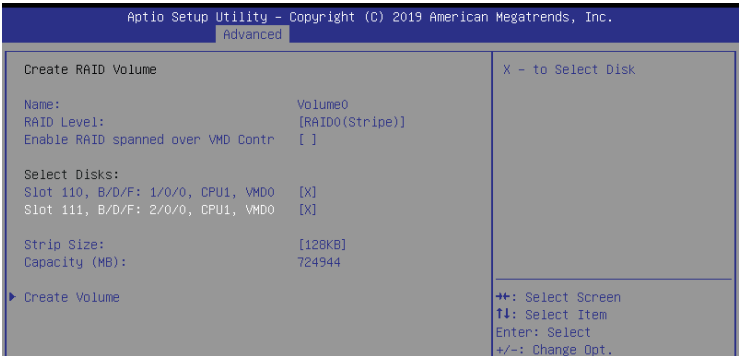

2. When the **Name** item is selected, enter a name for the RAID set and press <Enter>.
3. When the **RAID Level** item is selected, press <Enter> to select the RAID level to create, and then press <Enter>.
4. When the **Enable RAID spanned over VMD Controllers** item is selected, press <Enter> and select **X** to enable this function.
5. Under Select Disks, press <Enter> and select **X** for the disks you want to include in the RAID set.
6. When the **Strip Size** item is selected, press <Enter> to select strip size for the RAID array (for RAID 0, 10 and 5 only), and then press <Enter>. The available strip size values range from 4 KB to 128 KB. The following are typical values:
   - RAID 0: 128 KB
   - RAID 10: 64 KB
   - RAID 5: 64 KB

> We recommend a lower strip size for server systems, and a higher strip size for multimedia computer systems used mainly for audio and video editing.

7. When the **Capacity (MB)** item is selected, enter the RAID volume capacity that you want and press <Enter>. The default value indicates the maximum allowed capacity.
8. When the **Create Volume** item is selected, press <Enter> to create the RAID volume and return to the Intel® Rapid Storage Technology menu.

5.2.2 Deleting a RAID set

Be cautious when deleting a RAID set. You will lose all data on the hard disk drives when you delete a RAID set.

To delete a RAID set:

1. From the Intel® Virtual Raid on CPU menu, select the RAID volume you want to delete and press <Enter>. The following screen appears:

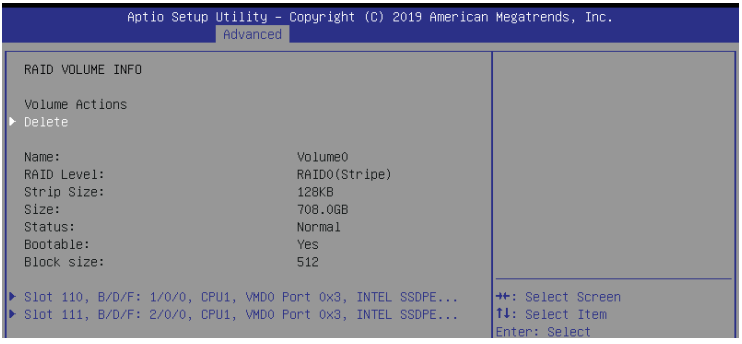

2. When the **Delete** item is selected, press <Enter>, then select **Yes** to delete the RAID volume and return to the Intel® Virtual Raid on CPU menu, or select **No** to cancel.

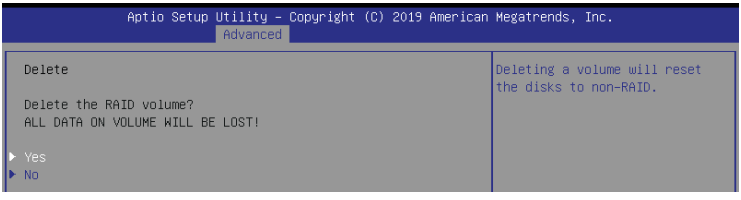

5.3 Intel® Rapid Storage Technology enterprise (Windows)

The Intel® Rapid Storage Technology enterprise allows you to create RAID 0, RAID 1, RAID 10 (RAID 1+0), and RAID 5 set(s) from Serial ATA hard disk drives that are connected to the Serial ATA connectors supported by the Southbridge.

You need to manually install the Intel® Rapid Storage Technology enterprise utility on a Windows® operating system.

To enter the Intel® Rapid Storage Technology enterprise utility under Windows operating system:

1. Turn on the system and go to the windows desktop.
2. Click the **Intel® Rapid Storage Technology enterprise** icon to display the main menu.

   Your storage system is configured for data protection, increased performance and optimal data storage capacity. You can create additional volumes to further optimize your storage system.

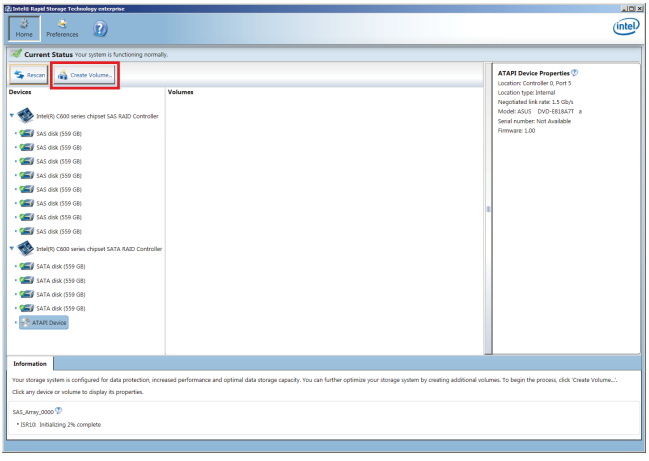

You can click **Rescan** to re-scan any attached hard disks.

5.3.1 Creating a RAID set

To create a RAID set:

1. From the utility main menu, select **Create Volume** and select volume type.
2. Click **Next**.

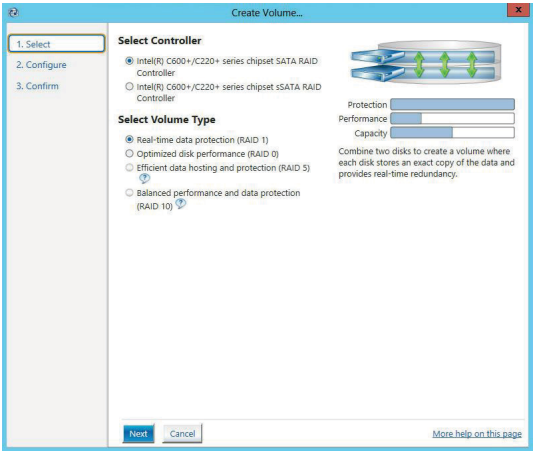

3. Enter a name for the RAID set, then select the array disks.
4. Select **Volume Size** tab, you can drag the bar to decide the volume size.
5. Click **Next**.

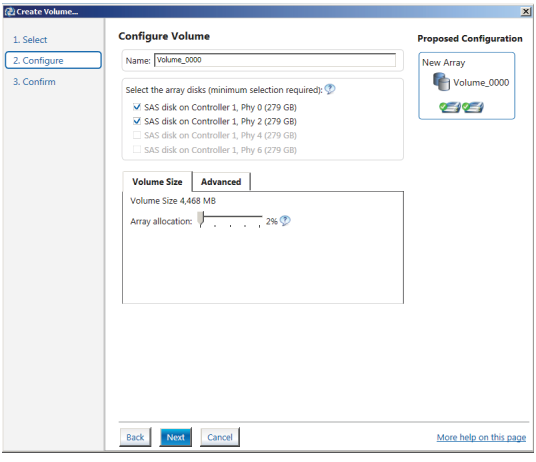

- If you do not want to keep the data on one of the selected disks, select **NO** when prompted.
- If you want to **Enable volume write-back cache** or **Initialize volume**, click **Advanced**.

6. Confirm the volume creation, than click **Create Volume** to continue.

This process could take a while depending on the number and size of the disks. You can continue using other applications during this time.

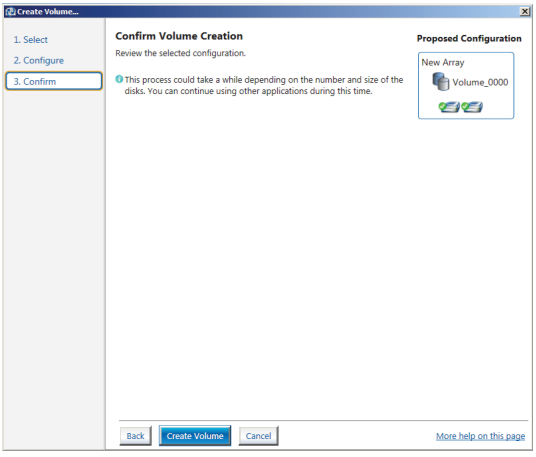

7. Wait until the process is completed, then click **OK** when prompted.

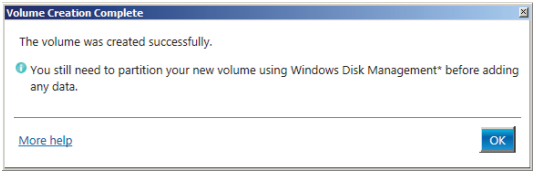

You still need to partition your new volume using Windows Disk Management before adding any data.

The RAID set is displayed in the **Volumes** list and you can change the settings in **Volume Properties**.

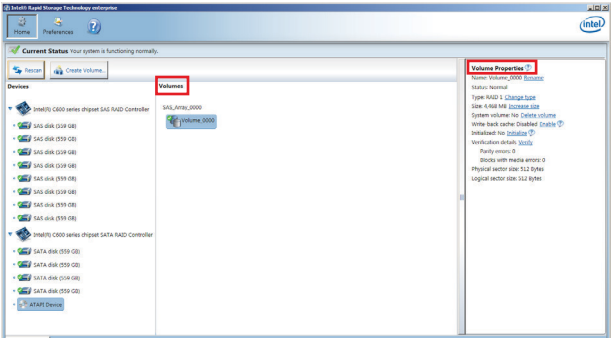

5.3.2 Changing a Volume Type

To change the volume type in **Volume Properties**:

1. Click the SATA array items you want to change in **Volumes** field.

2. From the **Volume Properties** field, select **Type: RAID 1 Change type**.

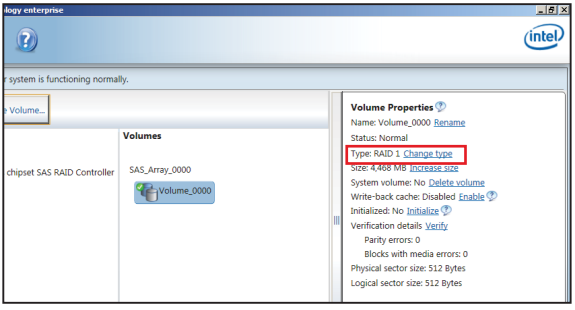

3. You can change the **Name**, **Select the new volume type**, and **Select additional disks to include in the new volume** if needed.

4. Select the **Data stripe size** for the RAID array (for RAID 0, 10 and 5 only), and click **OK**. The available stripe size values range from 4 KB to 128 KB. The following are typical values:
   RAID 0: 128KB
   RAID 10: 64KB
   RAID 5: 64KB

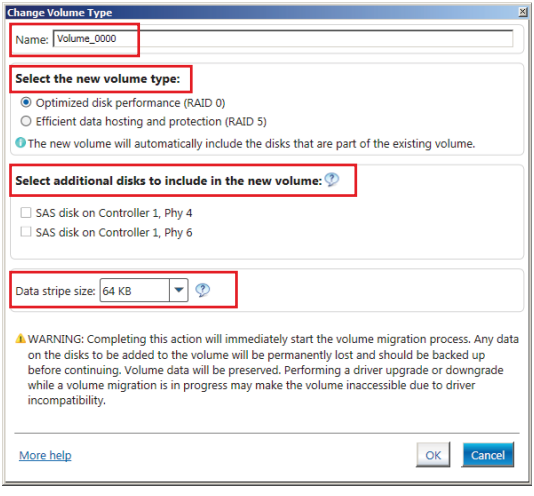

We recommend a lower stripe size for server systems, and a higher stripe size for multimedia computer systems used mainly for audio and video editing.

5.3.3 Deleting a volume

Be cautious when deleting a volume. You will lose all data on the hard disk drives. Before you proceed, ensure that you back up all your important data from your hard drives.

To delete a volume:

1. From the utility main menu, select the volume (ex. Volume_0000) in **Volumes** field you want to delete.

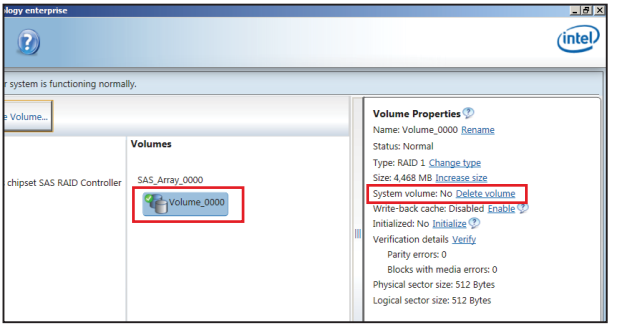

2. Select **Delete volume** in **Volume Properties** field. The following screen appears.

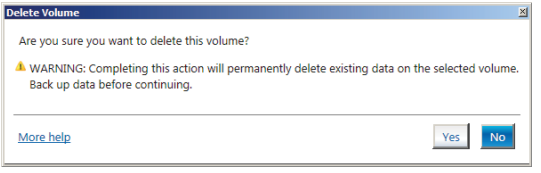

3. Click **Yes** to delete the volume and return to the utility main menu, or click **No** to return to the main menu.

5.3.4 Preferences

System Preferences

Allow you to set to show the notification area icon and show system information, warning, or errors here.

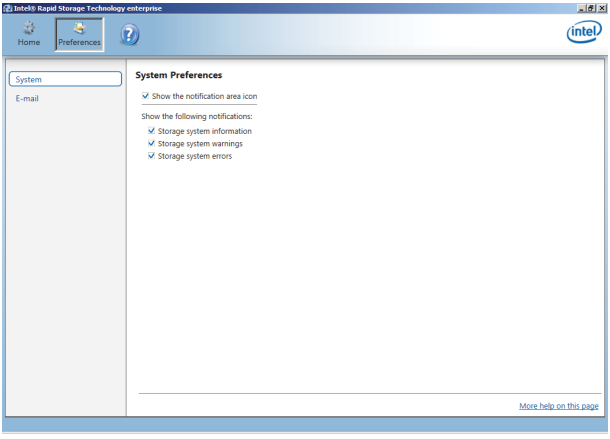

E-Mail Preferences

Allow you to set to sent e-mail of the following events:

- Storage system information
- Storage system warnings
- Storage system errors

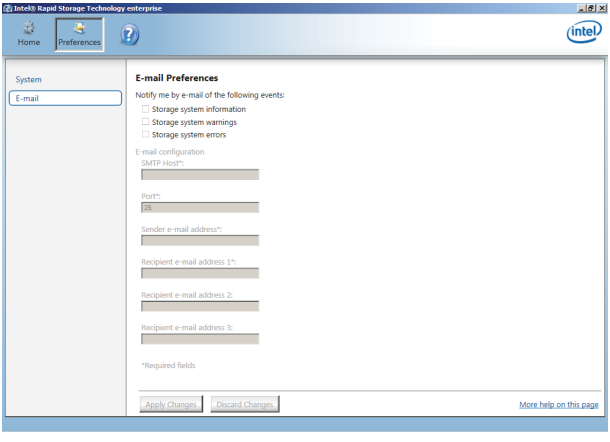

Appendix

This appendix includes additional information that you may refer to when configuring the motherboard.

Block diagram

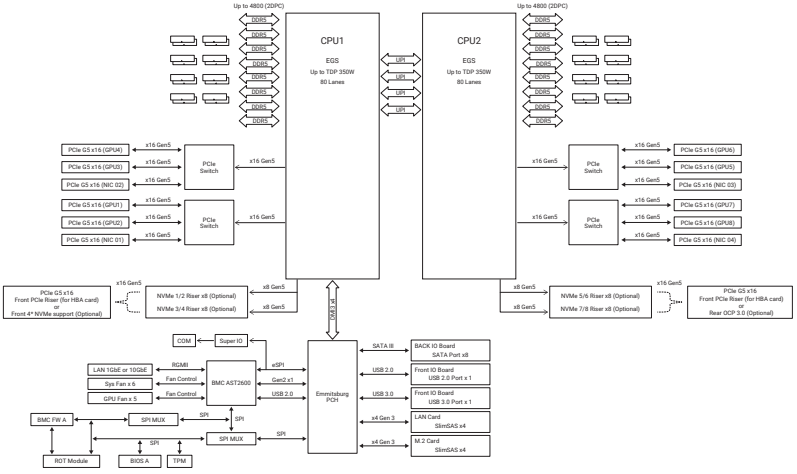

Q-Code table

ACTION	PHASE	POST CODE	TYPE	DESCRIPTION
Normal boot	Security Phase	01	Progress	First post code(POWER_ON_POST_CODE)
		02	Progress	Load BSP microcode(MICROCODE_POST_CODE)
		03	Progress	Set cache as ram for PEI phase(CACHE_ENABLED_POST_CODE)
		06	Progress	CPU Early init.(CPU_EARLY_INIT_POST_CODE)
		04	Progress	initializes South bridge for PEI preparation
	PEI(Pre-EFI initialization) phase	10	Progress	PEI Core Entry
		15	Progress	NB initialize before installed memory
		19	Progress	SB initialize before installed memory
		78~00	Progress	Wait BMC ready(duration: 120 seconds).
		A1	MRC Progress	QPI initialization
		A3	MRC Progress	QPI initialization
		A7	MRC Progress	QPI initialization
		A8	MRC Progress	QPI initialization
		A9	MRC Progress	QPI initialization
		AA	MRC Progress	QPI initialization
		AB	MRC Progress	QPI initialization
		AC	MRC Progress	QPI initialization
		AD	MRC Progress	QPI initialization
		AE	MRC Progress	QPI initialization
		AF	MRC Progress	QPI initialization Complete
		2F	Progress	Memory Init.
		B0	MRC Progress	Memory Init.
		B1	MRC Progress	Memory Init.
		AF	MRC Progress	RC Reset if require
		B4	MRC Progress	Memory Init.
		B2	MRC Progress	Memory Init.
		B3	MRC Progress	Memory Init.
		B5	MRC Progress	Memory Init.
		B6	MRC Progress	Memory Init.
		B7	MRC Progress	Memory Init.
		B8	MRC Progress	Memory Init.
		B9	MRC Progress	Memory Init.
		BA	MRC Progress	Memory Init.

(continued on the next page)

ACTION	PHASE	POST CODE	TYPE	DESCRIPTION
Normal boot	PEI(Pre-EFI initialization) phase	BB	MRC Progress	Memory Init.
		BC	MRC Progress	Memory Init.
		BF	MRC Progress	Memory Init. Done
		5A	MRC Progress	Other config. After RC end
		31	Progress	Memory already installed.
		32	Progress	CPU Init.
		34	Progress	CPU Init.
		36	Progress	CPU Init.
		4F	Progress	DXE Initial Program Load(IPL)
	DXE(Driver Execution Environment) phase	60	Progress	DXE Core Started
		61	Progress	DXE NVRAM Init.
		62	Progress	SB run-time init.
		63	Progress	DXE CPU Init
		68	Progress	NB Init.
		69	Progress	NB Init.
		6A	Progress	NB Init.
		70	Progress	SB Init.
		71	Progress	SB Init.
		72	Progress	SB Init.
		78	Progress	ACPI Init.
		79	Progress	CSM Init.
	BDS(Boot Device Selection) phase	90	Progress	BDS started
		91	Progress	Connect device event
		92	Progress	PCI Bus Enumeration.
		93	Progress	PCI Bus Enumeration.
		94	Progress	PCI Bus Enumeration.
		95	Progress	PCI Bus Enumeration.
		96	Progress	PCI Bus Enumeration.
		97	Progress	Console outout connect event
		98	Progress	Console input connect event
		99	Progress	AMI Super IO start
		9A	Progress	AMI USB Driver Init.
		9B	Progress	AMI USB Driver Init.
		9C	Progress	AMI USB Driver Init.
		9D	Progress	AMI USB Driver Init.
		b2	Progress	Legacy Option ROM Init.
		b3	Progress	Reset system
		b4	Progress	USB hotplug
		b6	Progress	NVRAM clean up
		b7	Progress	NVRAM configuration reset
		A0	Progress	IDE, AHCI Init.
		A1	Progress	IDE, AHCI Init.
		A2	Progress	IDE, AHCI Init.
		A3	Progress	IDE, AHCI Init.
		A8	Progress	BIOS Setup Utility password verify
		A9	Progress	BIOS Setup Utility start
		AB	Progress	BIOS Setup Utility input wait
		AD	Progress	Ready to boot event
		AE	Progress	Legacy boot event
	Operating system phase	AA	Progress	APIC mode
		AC	Progress	PIC mode

Notices

Federal Communications Commission Statement

This device complies with Part 15 of the FCC Rules. Operation is subject to the following two conditions:

- This device may not cause harmful interference.
- This device must accept any interference received including interference that may cause undesired operation.

This equipment has been tested and found to comply with the limits for a Class A digital device, pursuant to part 15 of the FCC Rules. These limits are designed to provide reasonable protection against harmful interference when the equipment is operated in a commercial environment. This equipment generates, uses, and can radiate radio frequency energy and, if not installed and used in accordance with the instruction manual, may cause harmful interference to radio communications. Operation of this equipment in a residential area is likely to cause harmful interference in which case the user will be required to correct the interference at his own expense.

The use of shielded cables for connection of the monitor to the graphics card is required to assure compliance with FCC regulations. Changes or modifications to this unit not expressly approved by the party responsible for compliance could void the user's authority to operate this equipment.

Compliance Statement of Innovation, Science and Economic Development Canada (ISED)

This device complies with Innovation, Science and Economic Development Canada licence exempt RSS standard(s). Operation is subject to the following two conditions: (1) this device may not cause interference, and (2) this device must accept any interference, including interference that may cause undesired operation of the device.

CAN ICES-003(A)/NMB-003(A)

Déclaration de conformité de Innovation, Sciences et Développement économique Canada (ISED)

Le présent appareil est conforme aux CNR d'Innovation, Sciences et Développement économique Canada applicables aux appareils radio exempts de licence. L'exploitation est autorisée aux deux conditions suivantes : (1) l'appareil ne doit pas produire de brouillage, et (2) l'utilisateur de l'appareil doit accepter tout brouillage radioélectrique subi, même si le brouillage est susceptible d'en compromettre le fonctionnement.

CAN ICES-003(A)/NMB-003(A)

KC: Korea Warning Statement

R-R-MSQ-ESC8000-E11P

이 기기는 업무용 환경에서 사용할 목적으로 적합성평가를 받은 기기로서 가정용 환경에서 사용하는 경우 전파간섭의 우려가 있습니다.

Australia statement notice

From 1 January 2012 updated warranties apply to all ASUS products, consistent with the Australian Consumer Law. For the latest product warranty details please visit https://www.asus.com/support/. Our goods come with guarantees that cannot be excluded under the Australian Consumer Law. You are entitled to a replacement or refund for a major failure and compensation for any other reasonably foreseeable loss or damage. You are also entitled to have the goods repaired or replaced if the goods fail to be of acceptable quality and the failure does not amount to a major failure.

If you require assistance please call ASUS Customer Service 1300 2787 88 or visit us at https://www.asus.com/support/.

DO NOT throw the motherboard in municipal waste. This product has been designed to enable proper reuse of parts and recycling. This symbol of the crossed out wheeled bin indicates that the product (electrical and electronic equipment) should not be placed in municipal waste. Check local regulations for disposal of electronic products.

DO NOT throw the mercury-containing button cell battery in municipal waste. This symbol of the crossed out wheeled bin indicates that the battery should not be placed in municipal waste.

Declaration of compliance for product environmental regulation

ASUS follows the green design concept to design and manufacture our products, and makes sure that each stage of the product life cycle of ASUS product is in line with global environmental regulations. In addition, ASUS disclose the relevant information based on regulation requirements.

Please refer to https://esg.asus.com/Compliance.htm for information disclosure based on regulation requirements ASUS is complied with:

EU REACH and Article 33

Complying with the REACH (Registration, Evaluation, Authorization, and Restriction of Chemicals) regulatory framework, we publish the chemical substances in our products at ASUS REACH website at https://esg.asus.com/Compliance.htm.

EU RoHS

This product complies with the EU RoHS Directive. For more details, see https://esg.asus.com/Compliance.htm

Japan JIS-C-0950 Material Declarations

Information on Japan RoHS (JIS-C-0950) chemical disclosures is available on https://esg.asus.com/Compliance.htm

India RoHS

This product complies with the “India E-Waste (Management) Rules, 2016” and prohibits use of lead, mercury, hexavalent chromium, polybrominated biphenyls (PBBs) and polybrominated diphenyl ethers (PBDEs) in concentrations exceeding 0.1% by weight in homogenous materials and 0.01% by weight in homogenous materials for cadmium, except for the exemptions listed in Schedule II of the Rule.

Vietnam RoHS

ASUS products sold in Vietnam, on or after September 23, 2011,meet the requirements of the Vietnam Circular 30/2011/TT-BCT.

Các sản phẩm ASUS bán tại Việt Nam, vào ngày 23 tháng 9 năm2011 trở về sau, đều phải đáp ứng các yêu cầu của Thông tư 30/2011/TT-BCT của Việt Nam.

Türkiye RoHS

AEEE Yönetmeliğine Uygundur

ASUS Recycling/Takeback Services

ASUS recycling and takeback programs come from our commitment to the highest standards for protecting our environment. We believe in providing solutions for you to be able to responsibly recycle our products, batteries, other components as well as the packaging materials. Please go to https://esg.asus.com/en/Takeback.htm for detailed recycling information in different regions.

Ecodesign Directive

The European Union announced a framework for the setting of ecodesign requirements for energy-related products (2009/125/EC). Specific implementing measures are aimed at improving environmental performance of specific products or across multiple product types. ASUS provides product information at https://esg.asus.com/Compliance.htm.

インターネット回線への接続に関するご注意

本製品は電気通信事業者（移動通信会社、固定通信会社、インターネットプロバイダ等）の通信回線（公衆無線LANを含む）に直接接続することができません。本製品をインターネットに接続する場合は、必ずルーター等を経由し接続してください。

Japan statement notice

This product cannot be directly connected to the Internet (including public wireless LAN) of a telecom carrier (mobile network companies, landline network companies, Internet providers, etc.). When connecting this product to the Internet, be sure to connect it through a router or switch.

Safety Precautions

Accessories that came with this product have been designed and verified for the use in connection with this product. Never use accessories for other products to prevent the risk of electric shock or fire.

安全上のご注意

付属品は当該専用品です。他の機器には使用しないでください。機器の破損もしくは、火災や感電の原因となることがあります。

Access Advance Patent Notice

Advance™

Covered by patents at patentlist.accessadvance.com

Simplified EU Declaration of Conformity

English ASUSTeK Computer Inc. hereby declares that this device is in compliance with the essential requirements and other relevant provisions of related Directives. Full text of EU declaration of conformity is available at: www.asus.com/support

Français AsusTek Computer Inc. déclare par la présente que cet appareil est conforme aux critères essentiels et autres clauses pertinentes des directives concernées. La déclaration de conformité de l'UE peut être téléchargée à partir du site Internet suivant : www.asus.com/support

Deutsch ASUSTeK Computer Inc. erklärt hiermit, dass dieses Gerät mit den wesentlichen Anforderungen und anderen relevanten Bestimmungen der zugehörigen Richtlinien übereinstimmt. Der gesamte Text der EU-Konformitätserklärung ist verfügbar unter: www.asus.com/support

Italiano ASUSTeK Computer Inc. con la presente dichiara che questo dispositivo è conforme ai requisiti essenziali e alle altre disposizioni pertinenti con le direttive correlate. Il testo completo della dichiarazione di conformità UE è disponibile all'indirizzo: www.asus.com/support

Русский Компания ASUS заявляет, что это устройство соответствует основным требованиям и другим соответствующим условиям соответствующих директив. Подробную информацию, пожалуйста, смотрите на www.asus.com/support

Български С настоящото ASUSTeK Computer Inc. декларира, че това устройство е в съответствие със съществените изисквания и другите приложими постановления на свързаните директиви. Пълният текст на декларацията за съответствие на ЕС е достъпна на адрес: www.asus.com/support

Hrvatski ASUSTeK Computer Inc. ovim izjavljuje da je ovaj uređaj sukladan s bitnim zahtjevima i ostalim odgovarajućim odredbama vezanih direktiva. Cijeli tekst EU izjave o sukladnosti dostupan je na: www.asus.com/support

Čeština Společnost ASUSTeK Computer Inc. tímto prohlašuje, že toto zařízení splňuje základní požadavky a další příslušná ustanovení souvisejících směrnic. Plné znění prohlášení o shodě EU je k dispozici na adrese: www.asus.com/support

Dansk ASUSTeK Computer Inc. erklærer hermed, at denne enhed er i overensstemmelse med hovedkravene og andre relevante bestemmelser i de relaterede direktiver. Hele EU-overensstemmelseserklæringen kan findes på: www.asus.com/support

Nederlands ASUSTeK Computer Inc. verklaart hierbij dat dit apparaat voldoet aan de essentiële vereisten en andere relevante bepalingen van de verwante richtlijnen. De volledige tekst van de EU-verklaring van conformiteit is beschikbaar op: www.asus.com/support

Eesti Käesolevaga kinnitab ASUSTeK Computer Inc, et see seade vastab asjakohaste direktiivide oluliste nõuetele ja teistele asjassepuutuvatele sätetele. EL vastavusdeklaratsiooni täielik tekst on saadaval järgmisel aadressil: www.asus.com/support

Suomi ASUSTeK Computer Inc. ilmoittaa täten, että tämä laite on asiaankuuluvien direktiivien olennaisten vaatimusten ja muiden tätä koskevien säädösten mukainen. EU-yhdenmukaisuusilmoituksen koko teksti on luettavissa osoitteessa: www.asus.com/support

Ελληνικά Με το παρόν, η AsusTek Computer Inc. δηλώνει ότι αυτή η συσκευή συμμορφώνεται με τις θεμελιώδεις απαιτήσεις και άλλες σχετικές διατάξεις των Οδηγιών της ΕΕ. Το πλήρες κείμενο της δήλωσης συμβατότητας είναι διαθέσιμο στη διεύθυνση: www.asus.com/support

Magyar Az ASUSTeK Computer Inc. ezennel kijelenti, hogy ez az eszköz megfelel a kapcsolódó Irányelvek lényeges követelményeinek és egyéb vonatkozó rendelkezéseinek. Az EU megfelelőségi nyilatkozat teljes szövege innen letölthető: www.asus.com/support

Latviski ASUSTeK Computer Inc. ar šo paziņo, ka šī ierīce atbilst saistīto Direktīvu būtiskajām prasībām un citiem citiem saistošajiem nosacījumiem. Pilns ES atbilstības paziņojuma teksts pieejams šeit: www.asus.com/support

Lietuvių „ASUSTeK Computer Inc." šiuo tvirtina, kad šis įrenginys atitinka pagrindinius reikalavimus ir kitas svarbias susijusių direktyvų nuostatas. Visą ES atitikties deklaracijos tekstą galima rasti: www.asus.com/support

Norsk ASUSTeK Computer Inc. erklærer herved at denne enheten er i samsvar med hovedsaklige krav og andre relevante forskrifter i relaterte direktiver. Fullstendig tekst for EU-samsvarserklæringen finnes på: www.asus.com/support

Polski Firma ASUSTeK Computer Inc. niniejszym oświadcza, że urządzenie to jest zgodne z zasadniczymi wymogami i innymi właściwymi postanowieniami powiązanych dyrektyw. Pełny tekst deklaracji zgodności UE jest dostępny pod adresem: www.asus.com/support

Português A ASUSTeK Computer Inc. declara que este dispositivo está em conformidade com os requisitos essenciais e outras disposições relevantes das Diretivas relacionadas. Texto integral da declaração da UE disponível em: www.asus.com/support

Română ASUSTeK Computer Inc. declară că acest dispozitiv se conformează cerinţelor esenţiale şi altor prevederi relevante ale directivelor conexe. Textul complet al declaraţiei de conformitate a Uniunii Europene se găseşte la: www.asus.com/support

Srpski ASUSTeK Computer Inc. ovim izjavljuje da je ovaj uređaj u saglasnosti sa osnovnim zahtevima i drugim relevantnim odredbama povezanih Direktiva. Pun tekst EU deklaracije o usaglašenosti je dostupan da adresi: www.asus.com/support

Slovensky Spoločnosť ASUSTeK Computer Inc. týmto vyhlasuje, že toto zariadenie vyhovuje základným požiadavkám a ostatým príslušným ustanoveniam príslušných smerníc. Celý text vyhlásenia o zhode pre štáty EÚ je dostupný na adrese: www.asus.com/support

Slovenščina ASUSTeK Computer Inc. izjavlja, da je ta naprava skladna z bistvenimi zahtevami in drugimi ustreznimi določbami povezanih direktiv. Celotno besedilo EU-izjave o skladnosti je na voljo na spletnem mestu: www.asus.com/support

Español Por la presente, ASUSTeK Computer Inc. declara que este dispositivo cumple los requisitos básicos y otras disposiciones pertinentes de las directivas relacionadas. El texto completo de la declaración de la UE de conformidad está disponible en: www.asus.com/support

Svenska ASUSTeK Computer Inc. förklarar härmed att denna enhet överensstämmer med de grundläggande kraven och andra relevanta föreskrifter i relaterade direktiv. Fulltext av EU-försäkran om överensstämmelse finns på: www.asus.com/support

Українська ASUSTeK Computer Inc. заявляє, що цей пристрій відповідає основним вимогам та іншим відповідним положенням відповідних Директив. Повний текст декларації відповідності стандартам ЄС доступний на: www.asus.com/support

Türkçe AsusTek Computer Inc., bu aygıtın temel gereksinimlerle ve ilişkili Yönergelerin diğer ilgili koşullarıyla uyumlu olduğunu beyan eder. AB uygunluk bildiriminin tam metni şu adreste bulunabilir: www.asus.com/support

Bosanski ASUSTeK Computer Inc. ovim izjavljuje da je ovaj uređaj usklađen sa bitnim zahtjevima i ostalim odgovarajućim odredbama vezanih direktiva. Cijeli tekst EU izjave o usklađenosti dostupan je na: www.asus.com/support

Simplified UKCA Declaration of Conformity

ASUSTeK Computer Inc. hereby declares that this device is in compliance with the essential requirements and other relevant provisions of related Regulations. Full text of UKCA declaration of conformity is available at: www.asus.com/support

FCC COMPLIANCE INFORMATION

Per FCC Part 2 Section 2.1077

Responsible Party: **Asus Computer International**
Address: **48720 Kato Rd., Fremont, CA 94538**
Phone/Fax No: **(510)739-3777/(510)608-4555**

hereby declares that the product

Product Name : **Server**
Model Number : **ESC8000-E11P**

compliance statement:

This device complies with part 15 of the FCC Rules. Operation is subject to the following two conditions: (1) This device may not cause harmful interference, and (2) this device must accept any interference received, including interference that may cause undesired operation.

Ver. 180125

Service and Support

Visit our multi-language website at https://www.asus.com/support.