SUPERSERVER®
SYS-220U-TNR



USER'S MANUAL

Revision 1.1a

The information in this User's Manual has been carefully reviewed and is believed to be accurate. The vendor assumes no responsibility for any inaccuracies that may be contained in this document, and makes no commitment to update or to keep current the information in this manual, or to notify any person or organization of the updates. Please Note: For the most up-to-date version of this manual, please see our website at www.supermicro.com.

Super Micro Computer, Inc. ("Supermicro") reserves the right to make changes to the product described in this manual at any time and without notice. This product, including software and documentation, is the property of Supermicro and/or its licensors, and is supplied only under a license. Any use or reproduction of this product is not allowed, except as expressly permitted by the terms of said license.

IN NO EVENT WILL Super Micro Computer, Inc. BE LIABLE FOR DIRECT, INDIRECT, SPECIAL, INCIDENTAL, SPECULATIVE OR CONSEQUENTIAL DAMAGES ARISING FROM THE USE OR INABILITY TO USE THIS PRODUCT OR DOCUMENTATION, EVEN IF ADVISED OF THE POSSIBILITY OF SUCH DAMAGES. IN PARTICULAR, SUPER MICRO COMPUTER, INC. SHALL NOT HAVE LIABILITY FOR ANY HARDWARE, SOFTWARE, OR DATA STORED OR USED WITH THE PRODUCT, INCLUDING THE COSTS OF REPAIRING, REPLACING, INTEGRATING, INSTALLING OR RECOVERING SUCH HARDWARE, SOFTWARE, OR DATA.

Any disputes arising between manufacturer and customer shall be governed by the laws of Santa Clara County in the State of California, USA. The State of California, County of Santa Clara shall be the exclusive venue for the resolution of any such disputes. Supermicro's total liability for all claims will not exceed the price paid for the hardware product.

FCC Statement: This equipment has been tested and found to comply with the limits for a Class A or Class B digital device pursuant to Part 15 of the FCC Rules. These limits are designed to provide reasonable protection against harmful interference when the equipment is operated in industrial environment for Class A device or in residential environment for Class B device. This equipment generates, uses, and can radiate radio frequency energy and, if not installed and used in accordance with the manufacturer's instruction manual, may cause harmful interference with radio communications. Operation of this equipment in a residential area is likely to cause harmful interference, in which case you will be required to correct the interference at your own expense.

California Best Management Practices Regulations for Perchlorate Materials: This Perchlorate warning applies only to products containing CR (Manganese Dioxide) Lithium coin cells. "Perchlorate Material-special handling may apply. See www.dtsc.ca.gov/hazardouswaste/perchlorate".



WARNING: This product can expose you to chemicals including lead, known to the State of California to cause cancer and birth defects or other reproductive harm. For more information, go to www.P65Warnings.ca.gov.

The products sold by Supermicro are not intended for and will not be used in life support systems, medical equipment, nuclear facilities or systems, aircraft, aircraft devices, aircraft/emergency communication devices or other critical systems whose failure to perform be reasonably expected to result in significant injury or loss of life or catastrophic property damage. Accordingly, Supermicro disclaims any and all liability, and should buyer use or sell such products for use in such ultra-hazardous applications, it does so entirely at its own risk. Furthermore, buyer agrees to fully indemnify, defend and hold Supermicro harmless for and against any and all claims, demands, actions, litigation, and proceedings of any kind arising out of or related to such ultra-hazardous use or sale.

Manual Revision 1.1a

Release Date: March 26, 2025 mk

Unless you request and receive written permission from Super Micro Computer, Inc., you may not copy any part of this document. Information in this document is subject to change without notice. Other products and companies referred to herein are trademarks or registered trademarks of their respective companies or mark holders.

Copyright © 2025 by Super Micro Computer, Inc.
All rights reserved.
Printed in the United States of America

Preface

About this Manual

This manual is written for professional system integrators and PC technicians. It provides information for the installation and use of the server. Installation and maintenance should be performed by experienced technicians only.

Please refer to the SYS-220U-TNR server specifications page on our website for updates on supported memory, processors and operating systems (http://www.supermicro.com).

Notes

For your system to work properly, please follow the links below to download all necessary drivers/utilities and the user's manual for your server.

- Supermicro product manuals: http://www.supermicro.com/support/manuals/
- Product drivers and utilities: https://www.supermicro.com/wdl
- Product safety info: http://www.supermicro.com/about/policies/safety_information.cfm

If you have any questions, please contact our support team at:
support@supermicro.com

This manual may be periodically updated without notice. Please check the Supermicro website for possible updates to the manual revision level.

Secure Data Deletion

A secure data deletion tool designed to fully erase all data from storage devices can be found on our website: https://www.supermicro.com/about/policies/disclaimer.cfm?url=/wdl/utility/Lot9_Secure_Data_Deletion_Utility/

Warnings

Special attention should be given to the following symbols used in this manual.



Warning! Indicates important information given to prevent equipment/property damage or personal injury.



Warning! Indicates high voltage may be encountered when performing a procedure.

Contents

Chapter 1 Introduction

1.1 Overview....9
Configuration Options....10
Ultra Riser Cards....10
WIO Riser Cards....10
Storage Protocols....10
Power Supply Options....10
1.2 System Features....11
Front View....11
Drive Carrier Indicators....11
Control Panel....12
Rear View....14
Power Supply Indicator....14
Expansion Slots and Riser Cards....15
LAN Speed Indicator....15
Top View....16
1.3 System Architecture....17
Main Components....17
System Block Diagram....18
1.4 Motherboard Layout....19
Quick Reference....20
Motherboard Block Diagram....21

Chapter 2 Server Installation

2.1 Overview....22
2.2 Unpacking the System....22
2.3 Preparing for Setup....22
Choosing a Setup Location....22
Rack Precautions....23
Server Precautions....23
Rack Mounting Considerations....23
2.4 Installing the Rails....25
Identifying the Rails....25
Releasing the Inner Rail....26

Installing the Inner Rails on the Chassis 27
Installing the Outer Rails onto the Rack 28
2.5 Installing the Chassis into a Rack 29
Removing the Chassis from the Rack 30
Chapter 3 Maintenance and Component Installation
3.1 Removing Power 31
3.2 Accessing the System 32
3.3 Processor and Heatsink Installation 33
The Processor Carrier Assembly 34
The Processor Heatsink Module (PHM) 36
Installing the PHM into the CPU Socket 37
Removing the PHM from the CPU Socket 40
Removing the Processor Carrier Assembly from the PHM 41
Removing the Processor from the Carrier Assembly 42
3.4 Memory 43
Memory Support 43
Guidelines Regarding Mixing DIMMs 44
DDR4 Memory Population Guidelines 45
Optane PMem 200 Series 46
PMem Notes 47
Installing Memory 48
3.5 Motherboard Battery 49
3.6 Storage Drives 50
Installing Drives 50
Checking the Temperature of an NVMe Drive 51
Hot-Swap for NVMe Drives 52
3.7 System Cooling 53
Fans 53
Air Shrouds 54
3.8 Power Supply 55
Power Supply LEDs 55
3.9. PCI Expansion Slots 56
Installing Full Height Expansion Cards 57
Installing the Low Profile Center Expansion Card 58

Installing the Internal Expansion Card 59
Ultra Riser and Expansion Cards with Optional Storage Drives 60
Removing the Ultra Riser Card 60
3.10 Cable Routing Diagram 61
NVMe Storage Cable Routing 62
SAS/SATA Storage Cable Routing 63
Part Numbers 68

Chapter 4 Motherboard Connections

4.1 Power Connections 69
4.2 Headers and Connectors 70
Control Panel 73
4.3 Input/Output Ports 76
4.4 Jumpers 77
4.5 LED Indicators 78
4.6 Storage Ports 79

Chapter 5 Software

5.1 Microsoft Windows OS Installation 80
5.2 Driver Installation 82
5.3 SuperDoctor® 5 83
5.4 BMC 84
BMC ADMIN User Password 84

Chapter 6 Optional Components

6.1 Storage Protocols Supported 85
6.2 Power Supply Modules 85
6.3 Cable Management Arm 86
6.4 TPM Security Module 88
6.5 Intel Virtual RAID on CPU (VROC) 89
Requirements and Restrictions 89
Supported SSDs and Operating Sytems 89
Additional Information 90
Hardware Key 90
Configuring Intel VMD 91
Configuring VMD Manually 91
Creating NVMe RAID Configurations 96
Status Indications 97

Hot Swap Drives 97
Hot-unplug 97
Hot-plug 97
Related Information Links 97
6.6 GPUs 98
Chapter 7 Troubleshooting and Support
7.1 Information Resources 105
Website 105
7.2 BMC Interface 106
7.3 Troubleshooting Procedures 107
General Technique 107
No Power 107
No Video 107
System Boot Failure 108
Memory Errors 108
Losing the System Setup Configuration 108
When the System Becomes Unstable 108
7.4 POST Codes 110
7.5 Crash Dump Using the BMC Dashboard 110
7.6 UEFI BIOS Recovery 111
Overview 111
Recovering the UEFI BIOS Image 111
Recovering the Main BIOS Block with a USB Device 111
7.7 CMOS Clear 116
7.8 BMC Reset 116
7.9 Where to Get Replacement Components 117
7.10 Reporting an Issue 117
Technical Support Procedures 117
Returning Merchandise for Service 117
Vendor Support Filing System 118
7.11 Feedback 118
7.12 Contacting Supermicro 119
Appendix A Standardized Warning Statements for AC Systems
Appendix B System Specifications
BSMI/RoHS 142

Contacting Supermicro

Headquarters

Address:	Super Micro Computer, Inc. 980 Rock Ave. San Jose, CA 95131 U.S.A.
Tel:	+1 (408) 503-8000
Fax:	+1 (408) 503-8008
Email:	marketing@supermicro.com (General Information) Sales-USA@supermicro.com (Sales Inquiries) Government_Sales-USA@supermicro.com (Gov. Sales Inquiries) support@supermicro.com (Technical Support) RMA@supermicro.com (RMA Support) Webmaster@supermicro.com (Webmaster)
Website:	www.supermicro.com

Europe

Address:	Super Micro Computer B.V. Het Sterrenbeeld 28, 5215 ML 's-Hertogenbosch, The Netherlands
Tel:	+31 (0) 73-6400390
Fax:	+31 (0) 73-6416525
Email:	Sales_Europe@supermicro.com (Sales Inquiries) Support_Europe@supermicro.com (Technical Support) RMA_Europe@supermicro.com (RMA Support)
Website:	www.supermicro.nl

Asia-Pacific

Address:	Super Micro Computer, Inc. 3F, No. 150, Jian 1st Rd. Zhonghe Dist., New Taipei City 235 Taiwan (R.O.C)
Tel:	+886-(2) 8226-3990
Fax:	+886-(2) 8226-3992
Email:	Sales-Asia@supermicro.com.tw (Sales Inquiries) Support@supermicro.com.tw (Technical Support) RMA@supermicro.com.tw (RMA Support)
Website:	www.supermicro.com.tw

Chapter 1

Introduction

1.1 Overview

This chapter provides a brief outline of the functions and features of the SuperServer SYS-220U-TNR. The following provides an overview of the specifications and capabilities.

System Overview	
Motherboard	X12DPU-6
Chassis	219U3TS-R1K62P-T
Processor Support	Dual P+ (LGA4189) sockets 3rd Gen Intel Xeon Scalable
Memory	32 DIMM slots, DDR4 RDIMM/LRDIMM or Intel Optane PMem 200 Series* (up to 8TB for DDR4, or up to 8TB of PMem and 4TB DDR4) Up to 3200MHz; size up to 256GB * Note: PMem 200 Series are supported on 3rd gen Intel Xeon Scalable Platinum, Gold and selected Silver processors.
Drive Support	Twenty-two hot-swap 2.5" SATA/SAS/NVMe hybrid drive bays plus two hot-swap 2.5" SATA/SAS drive bays. Two SuperDOM (disk on modules)
Expansion Slots	Eight PCIe 4.0: Five x8 full-height, 10.5" One x16 full-height, 10.5" One x16 low profile One internal x8 low-profile
I/O Ports	LAN ports depend on Ultra Riser option One VGA ports (rear) One serial port (rear) Two USB 3.0 ports (rear)
System Cooling	Four 8-cm heavy duty fans with Optimal Fan Speed Control Air Shroud, CPU heatsinks
Power	1600W redundant 80Plus Titanium level modules; (*optional*) 1300W DC power supplies Optional 2000W modules
Form Factor	2U rackmount; (WxHxD) 17.2 x 3.5 x 28.2 in. (437 x 89 x 717.2 mm)

A link to the Quick Reference Guide can be found on the product page of the Supermicro website.

The following safety models associated with the SYS-220U-TNR have been certified as compliant with UL and CSA: 219U-16, 219U-R16X12, 219U-R20X12, 219U-20, 219U-R13DX12, 219U-13D

Configuration Options

Ultra Riser Cards

Ultra Riser cards provide network connections and other capabilities. The customer must choose one when purchasing the system.

Ultra Riser Networking Options		
LAN Ports	**Part Number**	**Description**
No NIC	AOC-2UR668G4	Two PCIe 4.0 x16 and PCIe 4.0x8 (in x16, internal)
Two 10GBaseT	AOC-2UR68G4-i2XT	Two RJ45, Intel X710-AT2, PCIe 4.0 x8 (in x16, Internal), PCIe 4.0 x8 (in x16), PCIe 4.0 x16
Four 10GBaseT (two SFP+)	AOC-2UR68G4-i4XTS	Two RJ45 and two SFP+, Intel X710-TM4, PCIe 4.0 x8 (in x16, Internal), PCIe4.0 x8 (in x16), PCIe 4.0 x16
Two 25GbE	AOC-2UR68G4-m2TS	Two 25GbE, two SFP28, Mellanox ConnectX-6, PCIe 4.0 x8 (in x16, Internal), PCIe 4.0 x8 (in x16), PCIe 4.0 x16

WIO Riser Cards

Several customer choices are available for other riser cards. See the Expansion Slots and Riser Cards section in this chapter for details.

Storage Protocols

The storage drive bays can support SATA, SAS, and NVMe in any combination. To enable SAS and NVMe, additional hardware is required. Once the supporting hardware is installed for a selection of bays, drives of any storage protocol type can be inserted.

SATA – The default configuration supports up to twelve SATA drives. (Cables only)

SAS – An add-on controller card and cables can support up to twenty-four SAS (and SATA) drives.

NVMe – System supports up to twenty-two NVMe drives. The motherboard supports up to ten NVMe drives. Support for more than ten requires cables and retimer cards. Ten or fewer NVMe drives require a cable kit only.

Power Supply Options

Power Supply Module Options		
Watts	**Part Number**	**80Plus Level**
1600	PWS-1K62A-1R (default)	Titanium
2000	PWS-2K08A-1R	Titanium
1300 DC	PWS-1K30D-1R	Not applicable

1.2 System Features

The following views of the system display the main features. Refer to Appendix B for additional specifications.

Front View



Figure 1-1. Front View

Logical Storage Drive Numbers	
Item	**Description**
0-1	2.5" hot-swap SATA/SAS3* drive bays
2-11	2.5" hot-swap SATA/SAS3*/NVMe* hybrid drive bays (NVMe from CPU1)
12-23	2.5" hot-swap SATA/SAS3*/NVMe* hybrid drive bays (NVMe from CPU2)

* SAS3 and NVMe support requires additional parts

Drive Carrier Indicators

Each drive carrier has two LED indicators: an activity indicator and a status indicator. For RAID configurations using a controller, the meaning of the status indicator is described in the table below. For OS RAID or non-RAID configurations, some LED indications are not supported, such as hot spare. For VROC configurations, refer to the VROC section in this manual.

Drive Carrier LED Indicators			
	Color	**Blinking Pattern**	**Behavior for Device**
Activity LED	Blue	Solid On	Idle SAS or NVMe drive installed
	Blue	Blinking	I/O activity
	Off		Idle SATA or no drive

Drive Carrier LED Indicators			
	Color	**Blinking Pattern**	**Behavior for Device**
Status LED	Red	Solid On	Failure of drive with RSTe support
	Red	Blinking at 1 Hz	Rebuild drive with RSTe support
	Red	Blinking at 4 Hz	Identify drive with RSTe support
	Red	Blinking with two blinks and one stop at 1 Hz	Hot spare for drive with RSTe support
	Red	On for five seconds, then off	Power on for drive with RSTe support
	Amber	Blinking	Safe to remove NVMe drive
	Green	Solid on	Ejecting an NVMe drive

Control Panel

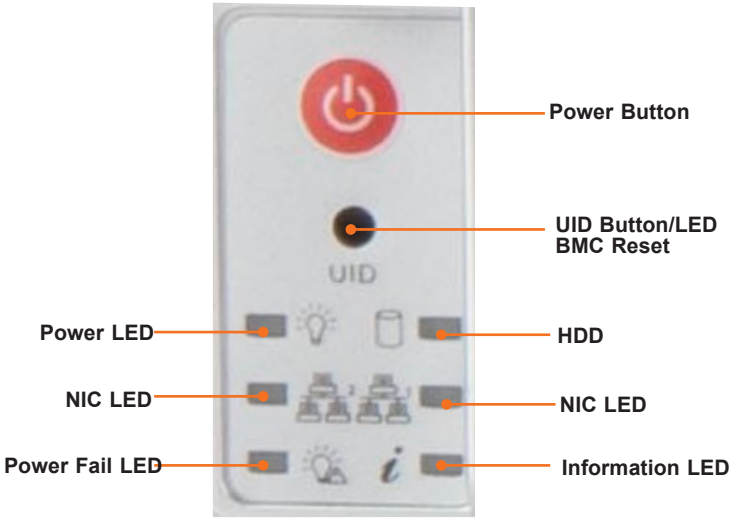

Figure 1-2. Control Panel

Control Panel Features	
Feature	**Description**
Power button	The main power switch applies or removes primary power from the power supply to the server but maintains standby power. Hold for four seconds to force a shut-down.
UID button/LED BMC reset	The unit identification (UID) button turns on or off the blue light function of the Information LED and a blue LED on the rear of the chassis. This button can also be used to reset the BMC.
Power LED	Steady on – Power on Blinking at 4Hz – Checking BIOS/BMC integrity Blinking at 4Hz and "i" LED is blue – BIOS firmware updating Two blinks at 4Hz, one pause 2hz and "i" LED blue – BMC firmware updating Blinking at 1Hz and "i" LED red – Fault detected
HDD LED	Indicates activity on the storage drives when flashing.
NIC LED	Indicates network activity on LANs when flashing.
Power Fail LED	Indicates a power supply module has failed.
Information LED	Alerts operator to several states, as noted in the table below

Information LED	
Color, Status	**Description**
Red, solid	An overheat condition has occurred.
Red, blinking at 1Hz	Fan failure, check for an inoperative fan.
Red, blinking at 0.25Hz	Power failure, check for a non-operational power supply.
Red, solid, with Power LED blinking green	Fault detected
Blue and red, blinking at 10 Hz	Recovery mode
Blue, solid	UID has been activated locally to locate the server in a rack environment.
Blue, blinking at 1Hz	UID has been activated using the BMC to locate the server in a rack environment.
Blue, blinking at 2Hz	BMC is resetting
Blue, blinking at 4Hz	BMC is setting factory defaults
Blue, blinking at 10Hz with Power LED blinking green	BMC/BIOS firmware is updating

Rear View

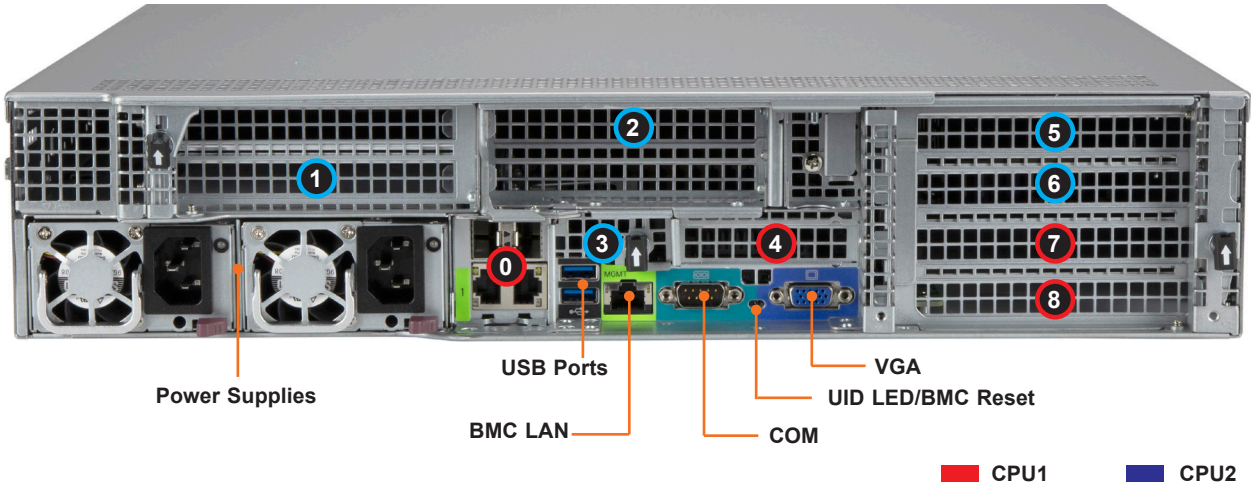

Figure 1-3. System: Rear View

System Features: Rear	
Feature	**Description**
Power Supplies	Two redundant power supply modules, PWS1 on the left, PWS2 on the right
0	LAN ports; specifications depend on your Ultra riser card option
1 to 8	Expansion card slots; see the next page for details
USB	Two USB 3.0 ports
BMC LAN	BMC LAN port; for indicator details, see BMC LAN LEDs
UID LED/ BMC Reset	UID button and BMC reset button (see Control panel description)
COM	Serial port
VGA	Video port

Power Supply Indicator

LEDs on the power supplies indicate the status of the module.

Power Supply Indicator	
LED Color and State	**Power Supply Condition**
Solid Green	Indicates that the power supply is on
Blinking Green	Indicates that the power supply is plugged in and turned off by the system.
Blinking Amber	Indicates that the power supply has a warning condition and continues to operate.
Solid Amber	Indicates that the power supply is plugged in, and is in an abnormal state. The system might need service. Please contact Supermicro technical support.
Off	No AC power to modules

Expansion Slots and Riser Cards

This system offers options for riser cards that provide custom PCIe capabilities—one Ultra Riser card, one right-facing WIO riser card, and one left-facing WIO card.

PCIe Slots per Riser Card			
Riser Card	**Part Number**	**Slot**	**Description (all PCIe 4.0)**
Ultra Riser card	AOC-2UR668G4	1 2 3	x16 FH, 10.5”L, 75W (CPU2) x16 FH, 10.5”L, 75W (CPU2) x8 (in x16), Internal LP, 75W (CPU1)
	AOC-2UR68G4-i2XT AOC-2UR68G4-i4XTS AOC-2UR68G4-m2TS	1 2 3	x16 FH, 10.5”L, 75W (CPU2) x8 (in x16) FH, 10.5”L, 75W (CPU2) x8 (in x16) Internal LP, 75W (CPU2)
Right-facing	RSC-WR-6	4	x16 low profile, 75W (CPU1)
Left-facing	RSC-W2-8888G4	5 6 7 8	x8 FH, 10.5”L, 25W (CPU2) x8 FH, 10.5”L, 25W (CPU2) x8 FH, 10.5”L, 25W (CPU1) x8 FH, 10.5”L, 25W (CPU1)
	RSC-W2-688G4	5 7 8	x16 FH, 10.5”L, 75W (CPU2) x8 (in x16) FH, 10.5”L, 75W (CPU1) x8 (in x16) FH, 10.5”L, 75W (CPU1)
	RSC-W2-66G4	5 7	x16 FH, 10.5", 75W (CPU2) x16 FH, 10.5", 75W (CPU1)

One riser card slot may be used for a controller card that supports SAS. Up to three slots may be used for retimer cards to support NMVe drive bays.

LAN Speed Indicator

LAN ports are provided by the Ultra Riser cards. One LED indicates the network speed.

LAN LED (Speed Indicator)		
Color	**10GbE**	**25GbE**
Green	10 Gb/s	25 Gb/s
Amber	1 Gb/s	10 Gb/s

Top View

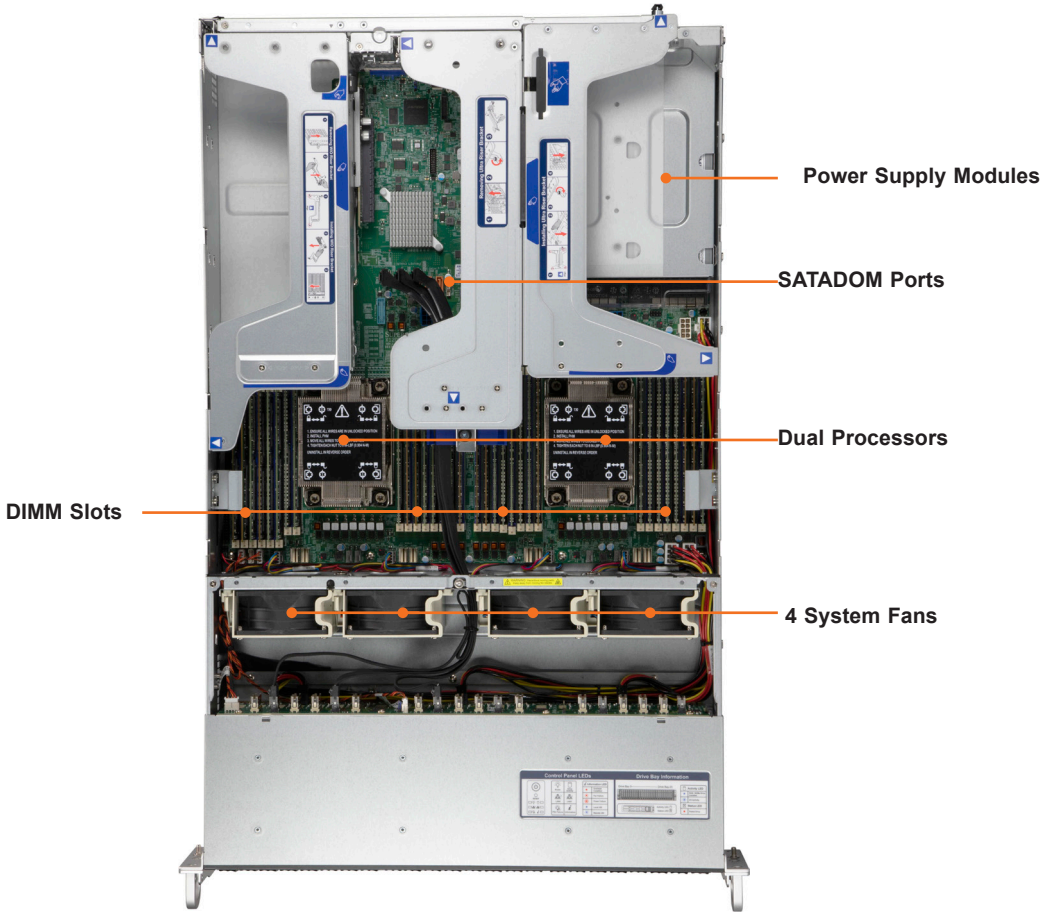

Figure 1-4. System: Top View

System Features: Top	
Feature	**Description**
Power Supply	Dual redundant modules; see options on a previous page
SuperDOM ports	Disk-on-Module port allows for flash cards to be mounted directly on the motherboard
DIMM slots	Dual in-line memory module (DIMM) slots
Processors	Dual Intel Xeon Scalable Processors with heatsinks, SNK-P0078P
System fans	Four 8-cm heavy duty PWM fans, FAN-0209L4

1.3 System Architecture

This section shows the locations of the system electrical components, and a block diagram of the overall system.

Main Components

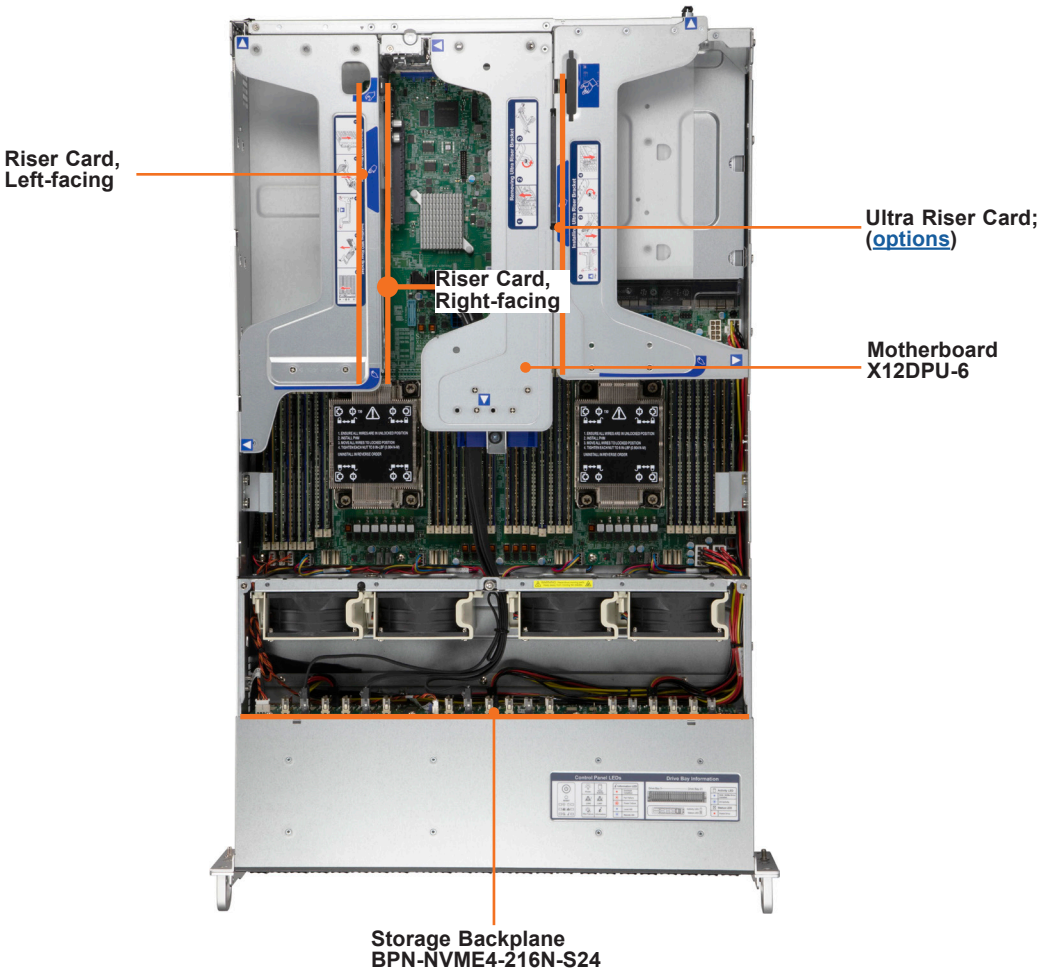

Figure 1-5. Main Component Locations

System Block Diagram

The block diagram below shows the connections and relationships between the subsystems and major components of the overall system.

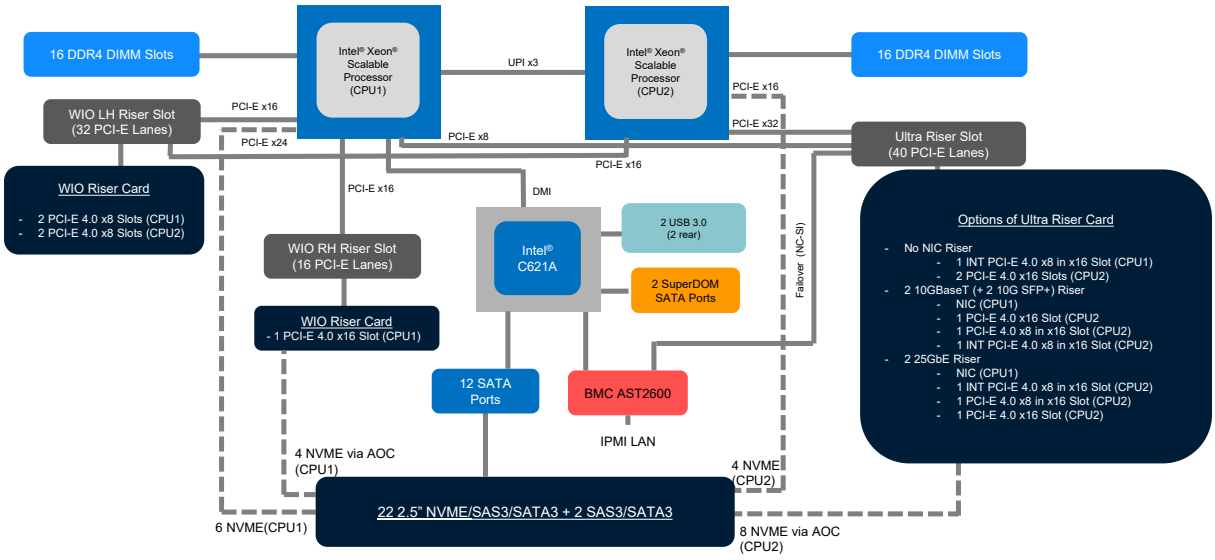

Figure 1-6. System Block Diagram

1.4 Motherboard Layout

Below is a layout of the X12DPU-6 motherboard with jumper, connector and LED locations shown. See the table on the following page for descriptions. For detailed descriptions, pinout information and jumper settings, refer to Chapter 4 or the Motherboard Manual.

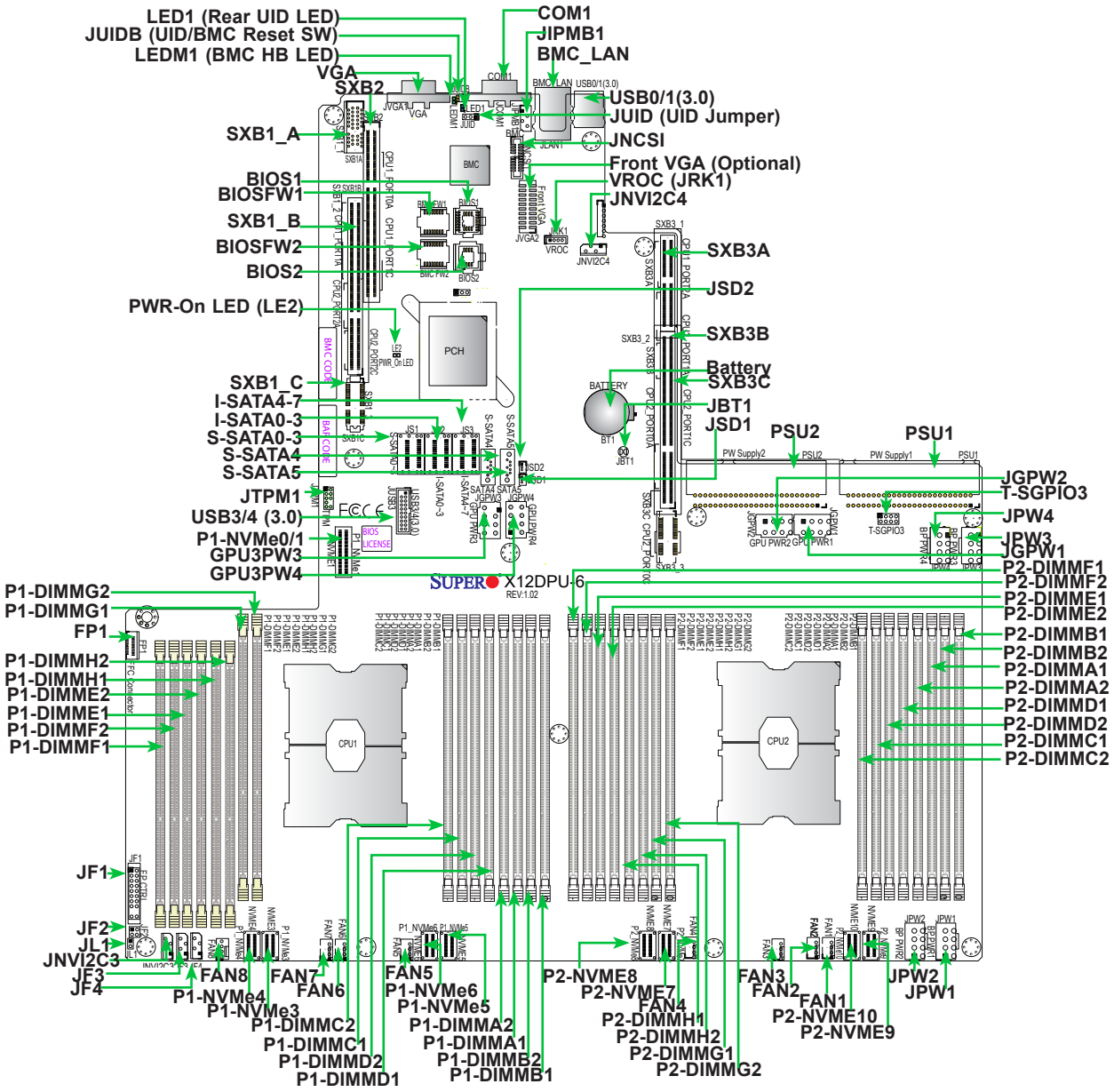

Figure 1-7. Motherboard Layout

Quick Reference

Jumper	Description	Default Setting
JBT1	Clear CMOS	Open (Normal)
JUID	UID Enable/System Reset Jumper	Pins 1-2 (UID Enabled)

Connector	Description
BT1	Onboard CMOS battery
COM1	Backplane COM port
FAN1 ~ FAN8	CPU/System fan headers
FP1	FFC (Flat Flexible Cable) connector
BMC_LAN	Dedicated BMC LAN port (JLAN1)
I-SATA 0~3, I-SATA 4~7	Intel PCH SATA 3.0 ports
S-SATA 0~3, S-SATA 4/S-SATA 5	S-SATA 0~3, S-SATA 4/S-SATA 5 supported by Intel PCH (S-SATA 4/5: Powered SATA connectors (with power pins built-in to be used of SuperDOM devices)
JF1	Front Control Panel header
JF3	Front Panel sensor
JF4	BMC I^2C Signal for 24 NVMe BPN (Backplane)
JIPMB1	4-pin BMC external I^2C header (for a BMC card)
JL1	Chassis intrusion header
JNCSI	NC-SI (Network Controller Sideband Interface) connector
JNVI^{2}C3/JNVI^{2}C4	NVMe I^2C headers (JNVI^{2}C3: for VPP#1/JNVI^{2}C4: for VPP#2)
JGPW1/JGPW2/JGPW3/JGPW4	GPU 8-pin power connectors (power connectors for GPU use)
JPW1/JPW2/JPW3/JPW4	Backplane 8-pin power connectors (for backplane devices)
JUIDB	UID LED/BMC Reset switch
JVGA2	Front accessible VGA connection header (optional)
PSU1/PSU2	Power Supply Unit #1/Power Supply Unit #2 for system use
JSD1/JSD2	SATA DOM (Disk_On_Module) power connectors
JTPM1	Trusted Platform Module connector
P1-NVMe1/3/4/5/6	PCIe 4.0 x8 NVME ports
P2-NVMe7/8/9/10	PCIe 4.0 x8 NVME ports
SXB1A/SXB1B/SXB1C	PCIe 4.0 (x16 + x16) Left riser card slot supported by CPU1/CPU2
SXB2	PCIe 4.0 x16 slot supported by CPU1
SXB3A/SXB3B/SXB3C	PCIe 4.0 (x16 + x16 + x8) Ultra riser slot supported by CPU2
T-SGPIO3	Serial_Link General-Purpose I/O connection header (for S-SATA 4/5 SuperDOM support)
USB0/1 (3.0)	Rear I/O USB 3.0 ports
USB3/4 (3.0)	Front accessible USB header with two USB 3.0 connections
VGA	Backplane VGA port
VROC (JRK1)	Intel VROC Key Header for NVMe RAID

LED	Description	State: Status
JF2	LAN LED	Ethernet LAN LED Indicators (Blink: Active)
LE2	Power_on LED	System Power LED: (On: System Power on)

LED	Description	State: Status
LEDM1	BMC Heartbeat LED	Blinking Green: BMC Normal
LED1	Rear UID (Unit Identifier) LED	Solid Blue: Unit Identified

Motherboard Block Diagram

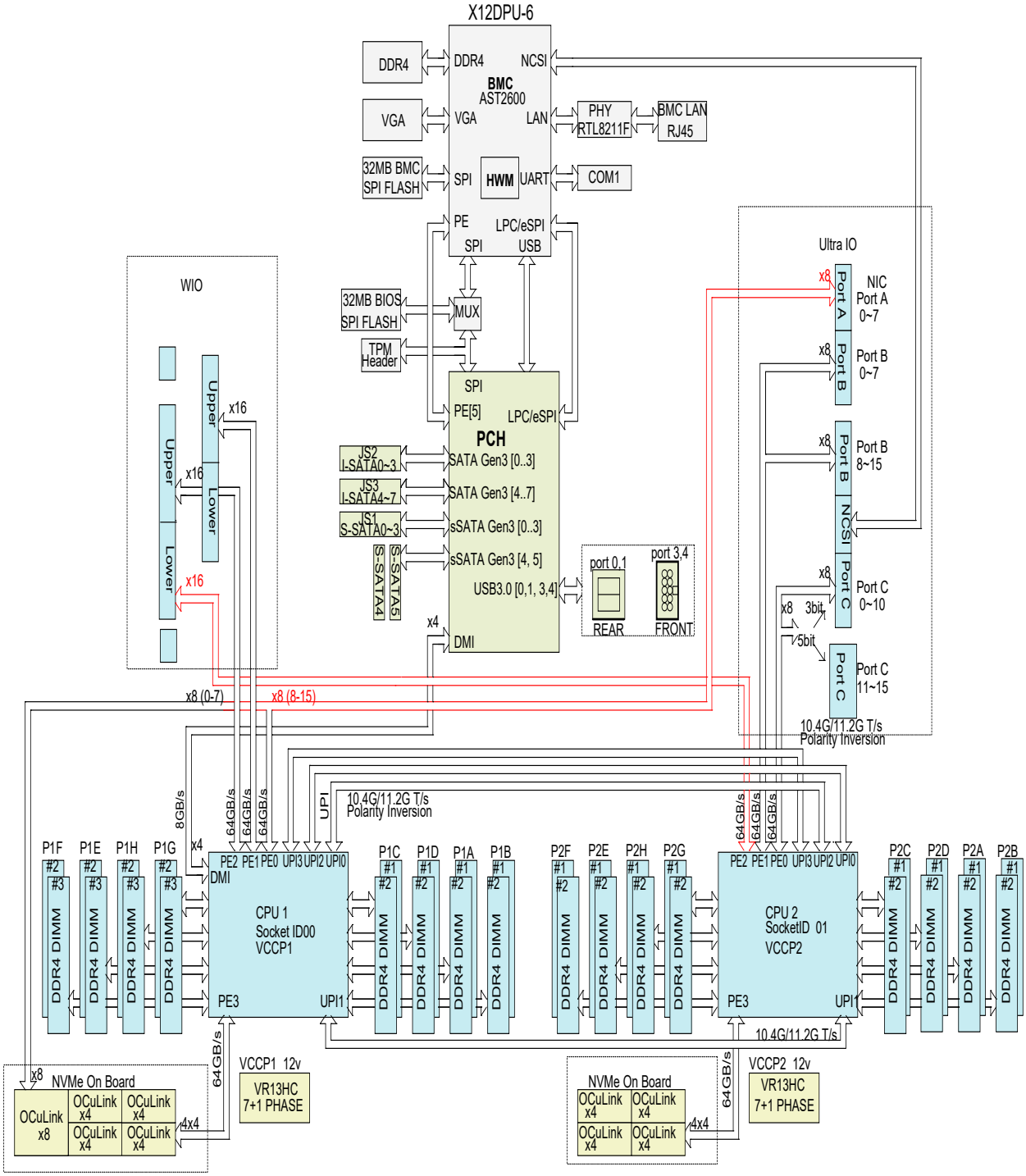

Figure 1-8. Motherboard Block Diagram

Chapter 2

Server Installation

2.1 Overview

This chapter provides advice and instructions for mounting your system in a server rack. If your system is not already fully integrated with processors, system memory etc., refer to Chapter 3 for details on installing those specific components.

Caution: Electrostatic Discharge (ESD) can damage electronic components. To prevent such damage to PCBs (printed circuit boards), it is important to use a grounded wrist strap, handle all PCBs by their edges and keep them in anti-static bags when not in use.

2.2 Unpacking the System

Inspect the box in which the system was shipped, and note if it was damaged. If any equipment appears damaged, file a claim with the carrier.

Decide on a suitable location for the rack unit that will hold the server. It should be situated in a clean, dust-free area that is well ventilated. Avoid areas where heat, electrical noise and electromagnetic fields are generated. It will also require a grounded AC power outlet nearby. Be sure to read the precautions and considerations noted in Appendix A.

2.3 Preparing for Setup

The box in which the system was shipped should include the rackmount hardware needed to install it into the rack. Please read this section in its entirety before you begin the installation.

Choosing a Setup Location

- The system should be situated in a clean, dust-free area that is well ventilated. Avoid areas where heat, electrical noise and electromagnetic fields are generated.
- Leave enough clearance in front of the rack so that you can open the front door completely (~25 inches) and approximately 30 inches of clearance in the back of the rack to allow sufficient space for airflow and access when servicing.
- This product should be installed only in a Restricted Access Location (dedicated equipment rooms, service closets, etc.).

- This product is not suitable for use with visual display workplace devices according to §2 of the German Ordinance for Work with Visual Display Units.

Rack Precautions

- Ensure that the leveling jacks on the bottom of the rack are extended to the floor so that the full weight of the rack rests on them.
- In single rack installations, stabilizers should be attached to the rack. In multiple rack installations, the racks should be coupled together.
- Always make sure the rack is stable before extending a server or other component from the rack.
- You should extend only one server or component at a time - extending two or more simultaneously may cause the rack to become unstable.
- Do not use a two-post "telco" type rack for 2U or larger servers.

Server Precautions

- Review the electrical and general safety precautions in Appendix A.
- Determine the placement of each component in the rack *before* you install the rails.
- Install the heaviest server components at the bottom of the rack first and then work your way up.
- Use a regulating uninterruptible power supply (UPS) to protect the server from power surges and voltage spikes and to keep your system operating in case of a power failure.
- Allow any drives and power supply modules to cool before touching them.
- When not servicing, always keep the front door of the rack and all covers/panels on the servers closed to maintain proper cooling.

Rack Mounting Considerations

Ambient Operating Temperature

If installed in a closed or multi-unit rack assembly, the ambient operating temperature of the rack environment may be greater than the room's ambient temperature. Therefore, consideration should be given to installing the equipment in an environment compatible with the manufacturer’s maximum rated ambient temperature (TMRA).

Airflow

Equipment should be mounted into a rack so that the amount of airflow required for safe operation is not compromised.

Mechanical Loading

Equipment should be mounted into a rack so that a hazardous condition does not arise due to uneven mechanical loading.

Circuit Overloading

Consideration should be given to the connection of the equipment to the power supply circuitry and the effect that any possible overloading of circuits might have on overcurrent protection and power supply wiring. Appropriate consideration of equipment nameplate ratings should be used when addressing this concern.

Reliable Ground

A reliable ground must be maintained at all times. To ensure this, the rack itself should be grounded. Particular attention should be given to power supply connections other than the direct connections to the branch circuit (i.e. the use of power strips, etc.).



To prevent bodily injury when mounting or servicing this unit in a rack, you must take special precautions to ensure that the system remains stable. The following guidelines are provided to ensure your safety:

- This unit should be mounted at the bottom of the rack if it is the only unit in the rack.
- When mounting this unit in a partially filled rack, load the rack from the bottom to the top with the heaviest component at the bottom of the rack.
- If the rack is provided with stabilizing devices, install the stabilizers before mounting or servicing the unit in the rack.
- Slide rail mounted equipment is not to be used as a shelf or a work space.

2.4 Installing the Rails

There are a variety of rack units on the market, which may require a slightly different assembly procedure. This rail set fits a rack between 26.8" and 36.4" deep.

The following is a basic guideline for installing the system into a rack with the rack mounting hardware provided. You should also refer to the installation instructions that came with the specific rack you are using.

Identifying the Rails

The chassis package includes two rail assemblies. Each assembly consists of three sections: An inner rail that secures directly to the chassis, an outer rail that secures to the rack, and a middle rail which extends from the outer rail. These assemblies are specifically designed for the left and right side of the chassis and labeled.

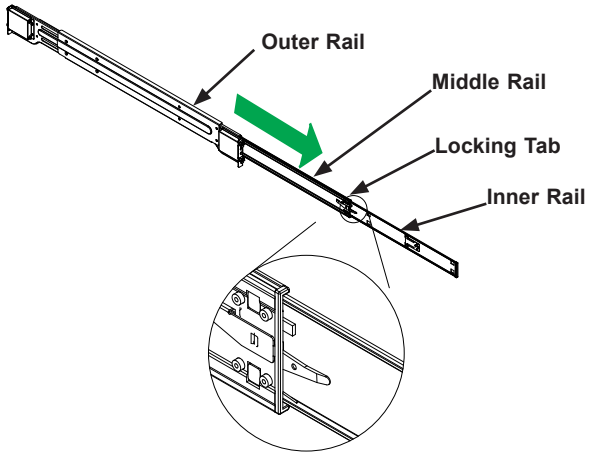

Figure 2-1. Identifying the Outer Rail, Middle Rail and Inner Rail
(Left Rail Assembly Shown)

Releasing the Inner Rail

Each inner rail has a locking latch. This latch prevents the server from coming completely out of the rack when when the chassis is pulled out for servicing.

To mount the rail onto the chassis, first release the inner rail from the outer rails.

1. Pull the inner rail out of the outer rail until it is fully extended as illustrated below.
2. Press the locking tab down to release the inner rail.
3. Pull the inner rail all the way out.

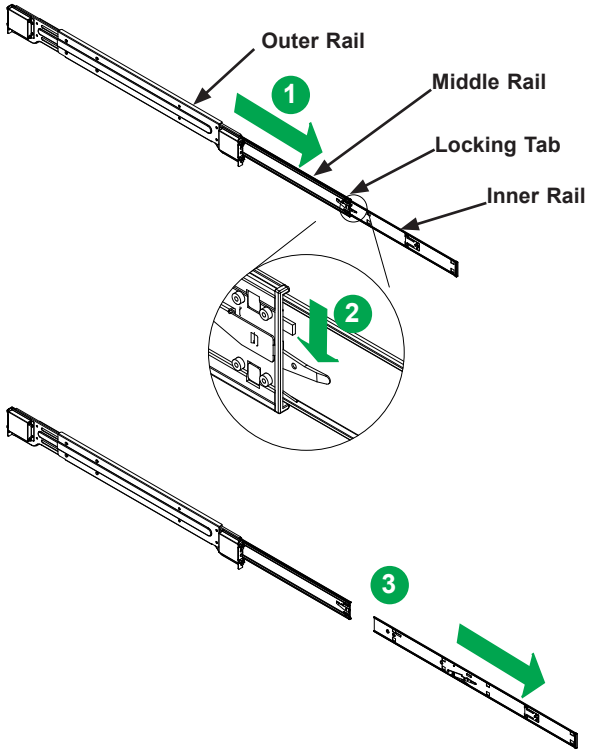

Figure 2-2. Extending and Releasing the Inner Rail

Installing the Inner Rails on the Chassis

Installing the Inner Rails

1. Identify the left and right inner rails. They are labeled.
2. Place the inner rail firmly against the side of the chassis, aligning the hooks on the side of the chassis with the holes in the inner rail.
3. Slide the inner rail forward toward the front of the chassis until the quick release bracket snaps into place, securing the rail to the chassis.
4. Optionally, you can further secure the inner rail to the chassis with screws.

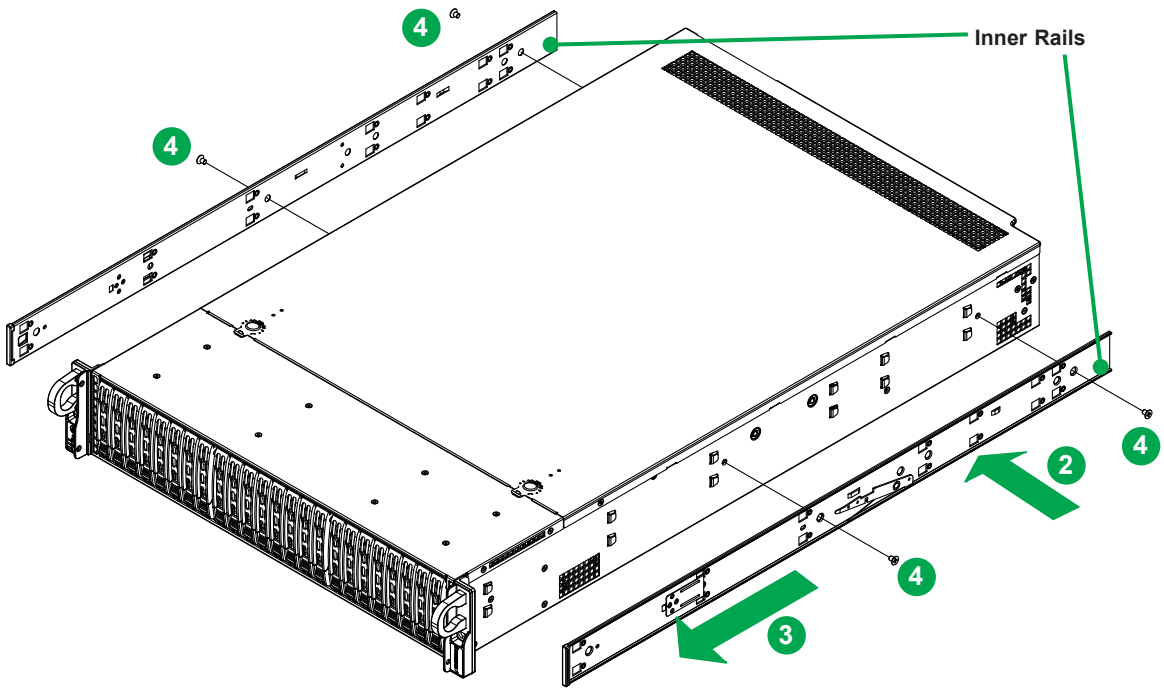

Figure 2-3. Installing the Inner Rails

Installing the Outer Rails onto the Rack

Each end of the assembled outer rail includes a bracket with hooks and square, spring-loaded pegs to fit into the square holes in your rack.

Installing the Outer Rail

1. Press upward on the locking tab at the rear end of the middle rail.
2. Push the middle rail back into the outer rail.
3. Hang the hooks on the front of the outer rail onto the square holes on the front of the rack. If desired, use screws to secure the outer rails to the rack.
4. Pull out the rear of the outer rail, adjusting the length until it just fits within the posts of the rack.
5. Hang the hooks of the rear section of the outer rail onto the square holes on the rear of the rack. Take care that the proper holes are used so the rails are level. If desired, use screws to secure the rear of the outer rail to the rear of the rack.

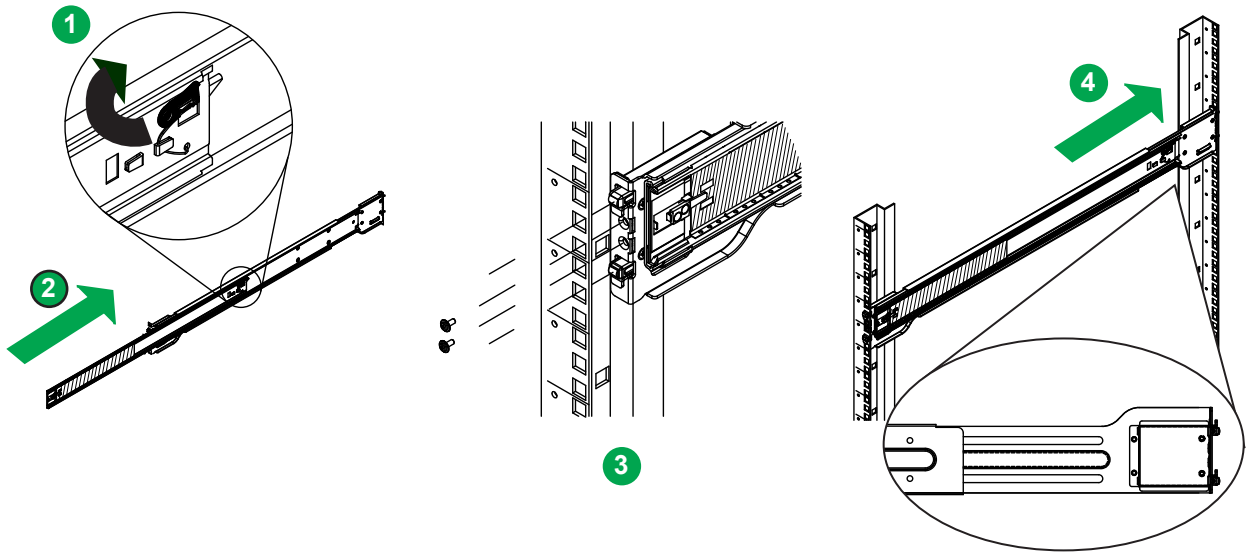

Figure 2-4. Extending and Mounting the Outer Rails

Note: The figure above is for illustrative purposes only. Always install servers at the bottom of the rack first.

Stability hazard. The rack stabilizing mechanism must be in place, or the rack must be bolted to the floor before you slide the unit out for servicing. Failure to stabilize the rack can cause the rack to tip over.

Warning: Do not pick up the server with the front handles. They are designed to pull the system from a rack only.

2.5 Installing the Chassis into a Rack

Once rails are attached to the chassis and the rack, you can install the server.

Warning: Mounting the system into the rack requires at least two people to support the chassis during installation. Please follow safety recommendations printed on the rails.

Installing the Chassis into a Rack

1. Extend the outer rails as illustrated.
2. Align the inner rails of the chassis with the outer rails on the rack.
3. Slide the inner rails into the outer rails, keeping the pressure even on both sides. When the chassis has been pushed completely into the rack, it should click into the locked position.
4. Optional screws may be used to hold the front of the chassis to the rack.

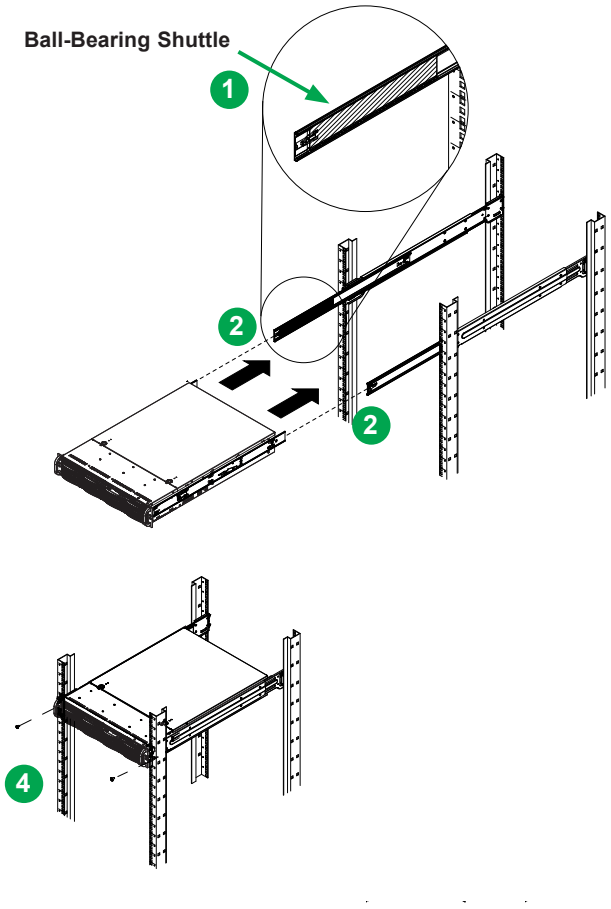

Figure 2-5. Installing the Server into the Rack

Note: Keep the ball bearing shuttle locked at the front of the middle rail during installation.

Note: Figure is for illustrative purposes only. Always install servers to the bottom of a rack first.

Removing the Chassis from the Rack

Caution! It is dangerous for a single person to off-load the heavy chassis from the rack without assistance. Be sure to have sufficient assistance supporting the chassis when removing it from the rack. Use a lift.

1. Pull the chassis forward out the front of the rack until it stops.
2. Press the release latches on each of the inner rails downward simultaneously and continue to pull the chassis forward and out of the rack.

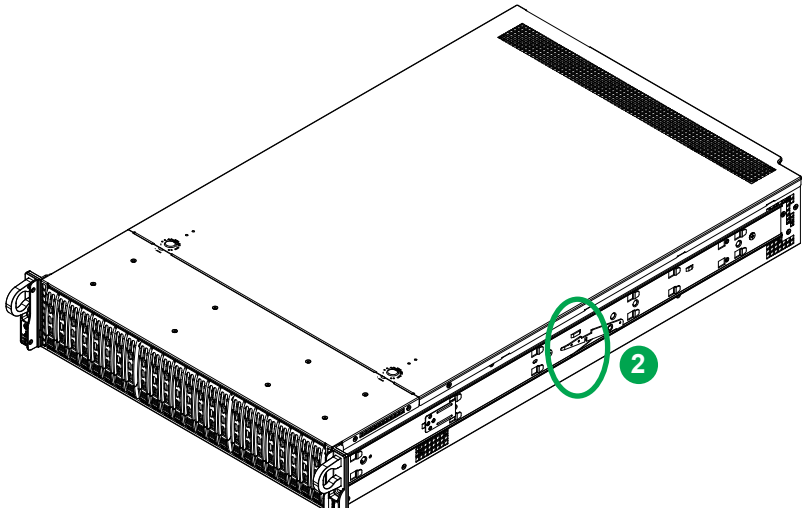

Figure 2-6. Removing the Chassis From the Rack

Chapter 3

Maintenance and Component Installation

This chapter provides instructions on installing and replacing main system components. To prevent compatibility issues, only use components that match the specifications and/or part numbers given.

Installation or replacement of most components require that power first be removed from the system. Please follow the procedures given in each section.

3.1 Removing Power

Use the following procedure to ensure that power has been removed from the system. This step is necessary when removing or installing non hot-swap components or when replacing a non-redundant power supply.

1. Use the operating system to power down the system.
2. After the system has completely shut-down, disconnect the AC power cord(s) from the power strip or outlet. (If your system has more than one power supply, remove the AC power cords from all power supply modules.)
3. Disconnect the power cord(s) from the power supply module(s).

3.2 Accessing the System

The 219U chassis has a removable top cover to access internal components.

Removing the Top Cover

1. Remove the two screws on each side of the cover, which secure the cover to the chassis. These two screws are optional and will not impact functionality if they are not installed.

2. Press the two release buttons and slide the cover toward the rear and lift off.

Check that all ventilation openings on the top cover and the top of the chassis are clear and unobstructed.

Caution: Except for short periods of time, do not operate the server without the cover in place. The chassis cover must be in place to allow for proper airflow and to prevent overheating.

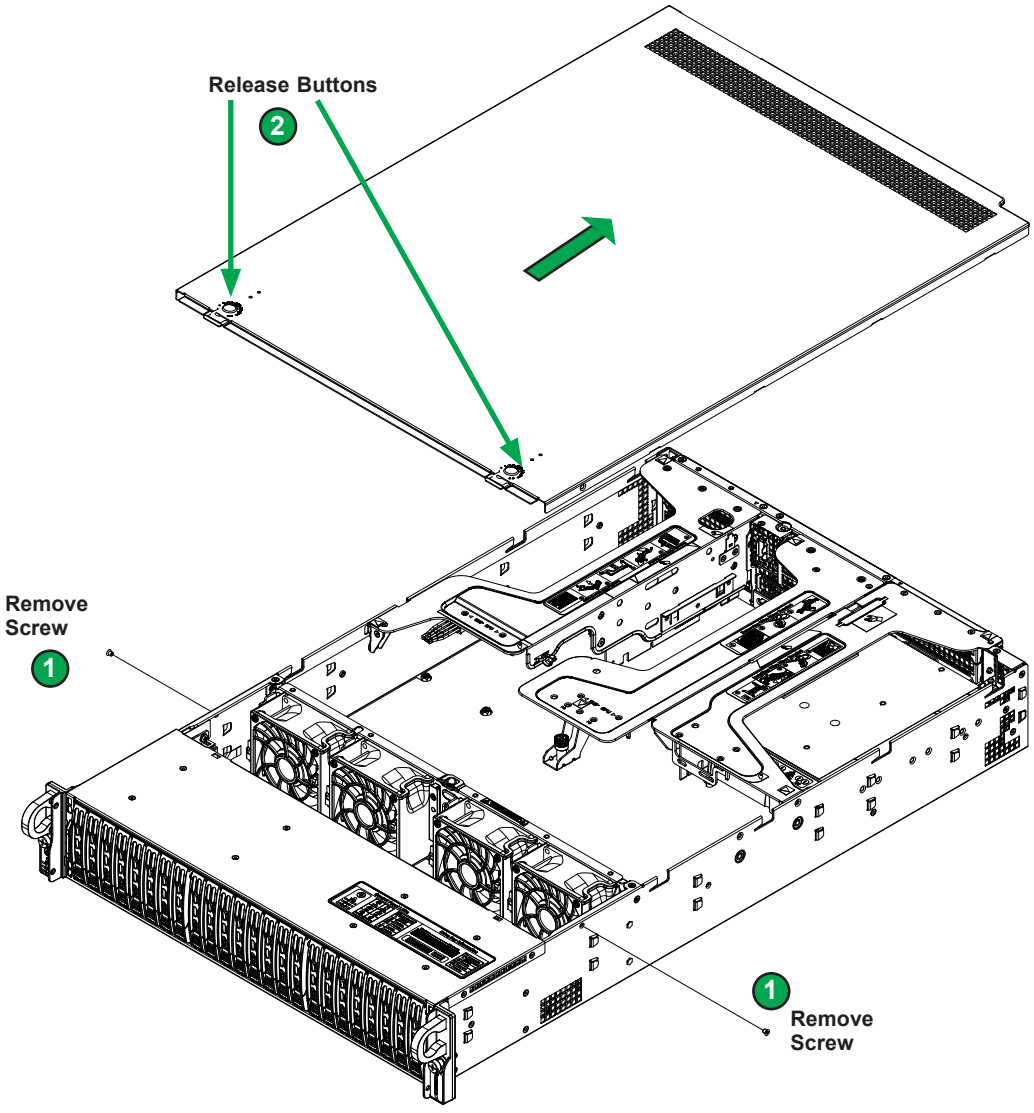

Figure 3-1. Removing the Chassis Cover

3.3 Processor and Heatsink Installation

The processor (CPU) and processor carrier should be assembled together first to form the processor carrier assembly. This will be attached to the heatsink to form the processor heatsink module (PHM) before being installed onto the CPU socket.

Notes:

- Use ESD protection.
- Unplug the AC power cord from all power supplies.
- Check that the plastic protective cover is on the CPU socket and that none of the socket pins are bent. If they are, contact your retailer.
- When handling the processor, avoid touching or placing direct pressure on the land grid array (gold contacts).
- Improper installation or socket misalignment can cause serious damage to the processor or the socket and may require manufacturer repairs.
- Thermal grease is pre-applied on new heatsinks. No additional thermal grease is needed.
- Refer to the Supermicro website for updates on processor support.
- Graphics in this manual are for illustration only. Your components may look different.

The Processor Carrier Assembly

The processor carrier assembly is comprised of the processor and the processor carrier.

1. Hold the processor with the land grid array (LGA, gold contacts) facing down. Locate the gold triangle at the corner of the processor and the corresponding hollowed triangle on the processor carrier as shown below. These triangles indicate the location of pin 1.

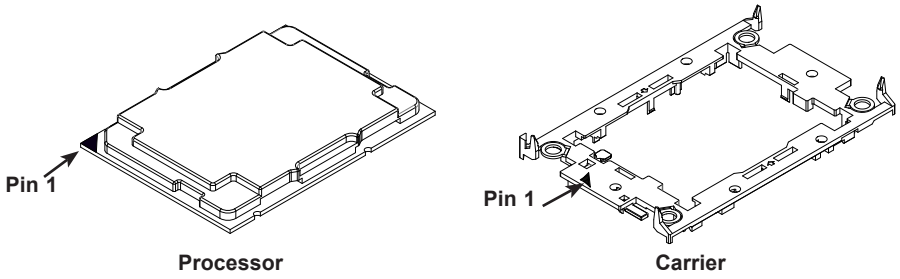

2. Turn the processor over (with the gold LGA up). Locate the CPU keys on the processor and the four latches on the carrier as shown below.

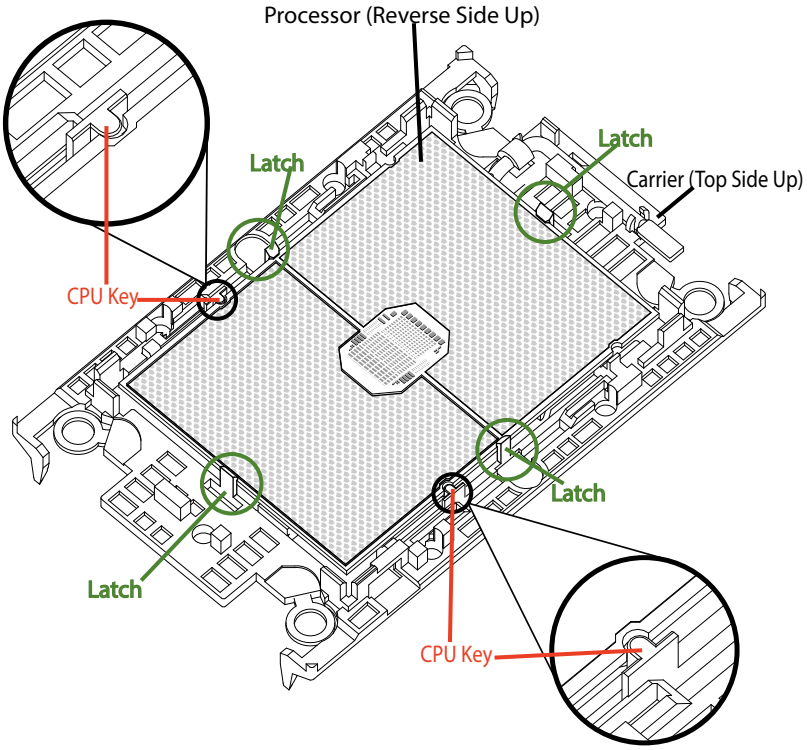

3. Locate the lever on the carrier and, if necessary, press it down as shown below.

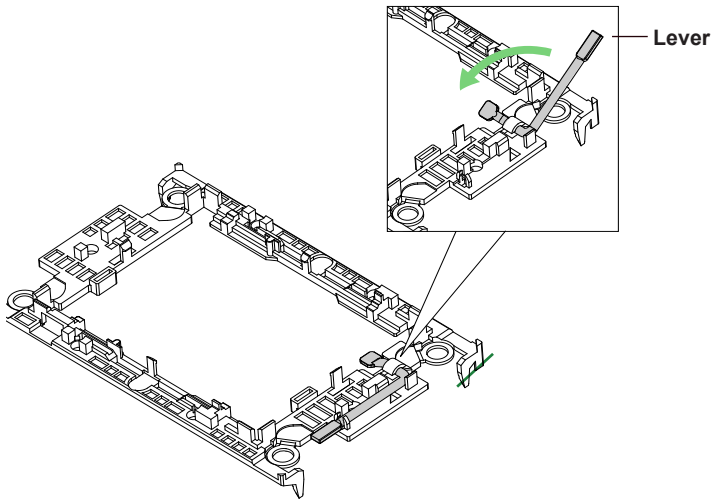

4. Align the CPU keys on the processor (A & B) with those on the carrier (a & b) as shown below.

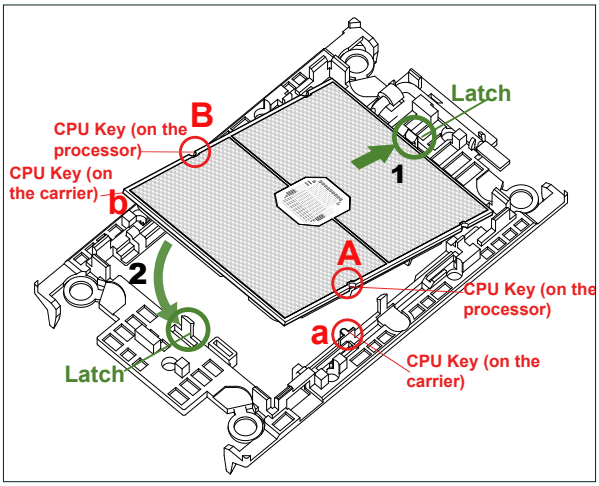

5. Carefully place one end of the processor under latch 1 on the carrier, and then press the other end down until it snaps into latch 2 and is properly seated on the carrier.

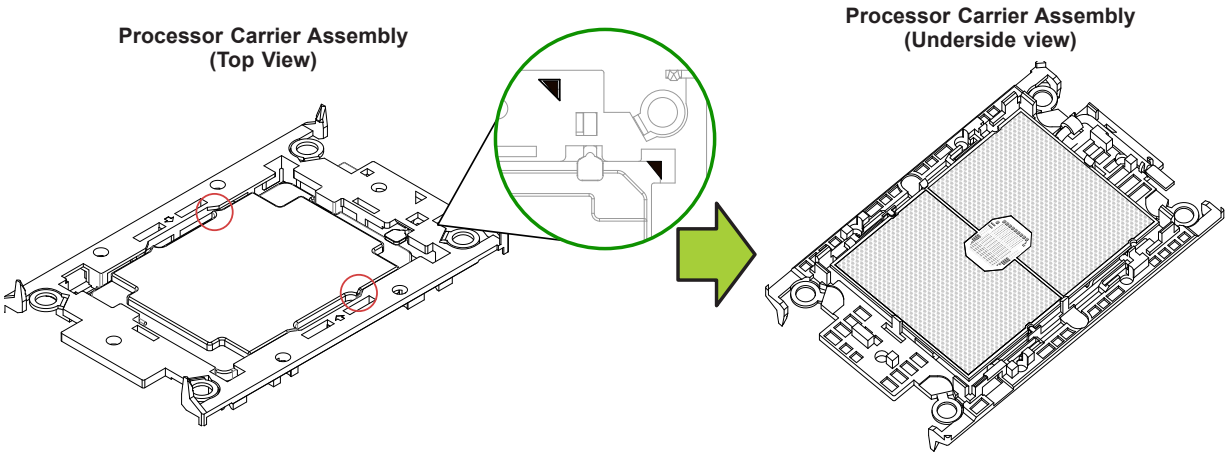

The Processor Heatsink Module (PHM)

After creating the processor carrier assembly, mount the heatsink onto the carrier assembly to form the processor heatsink module (PHM).

Note: If this is a new heatsink, the thermal grease has been pre-applied. Otherwise, apply the proper amount of thermal grease to the underside of the heatsink.

1. Turn the heatsink over with the thermal grease facing up. Note the two triangle cutouts (A, B) located at the diagonal corners of the heatsink as shown in the drawing below.
2. On the processor carrier assembly, find pin 1, as noted by the triangles. Hold the processor carrier assembly over so that the gold LGA is facing up.
3. Align clip "a" (pin 1) on the carrier assembly with the triangular cutout A on the heatsink and b, c, d on the carrier assembly with B, C, D on the heatsink.
4. Push the carrier assembly onto the heatsink, making sure that all four clips on each corner are properly secured.

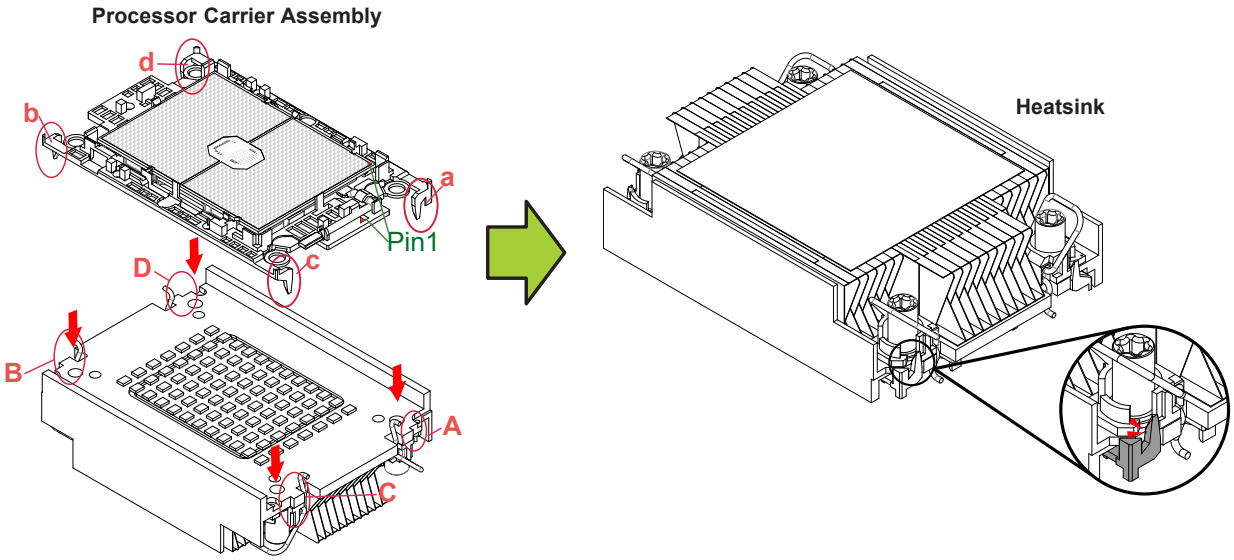

Installing the PHM into the CPU Socket

1. Remove the plastic protective cover from the CPU socket. Gently squeeze the grip tabs then pull the cover off.

CPU Socket with Plastic Protective Cover

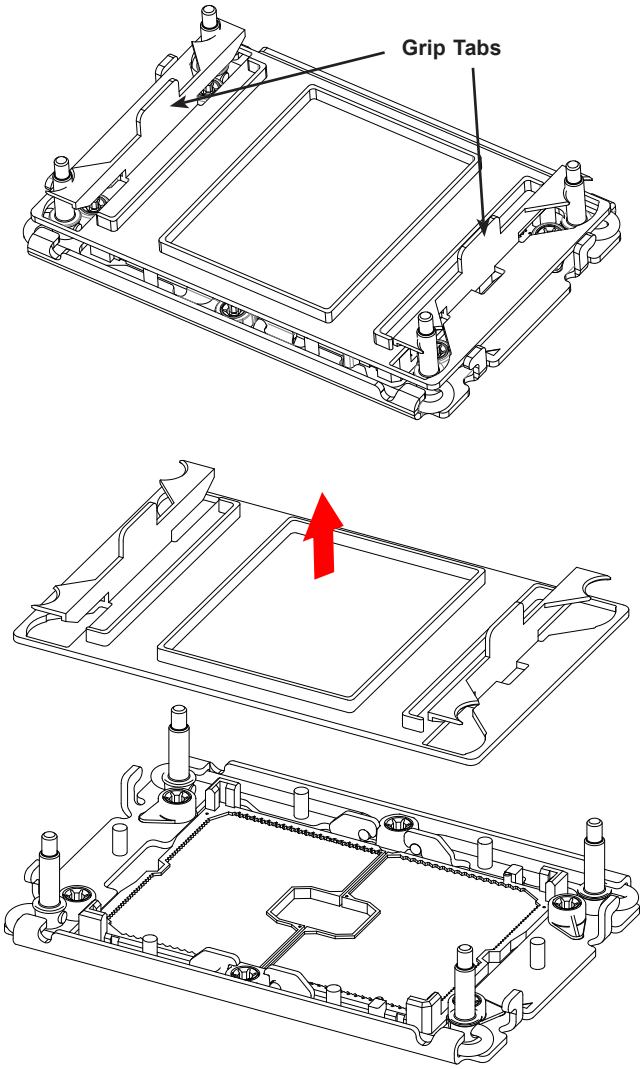

2. Locate four threaded fasteners (a, b, c, d) on the CPU socket.

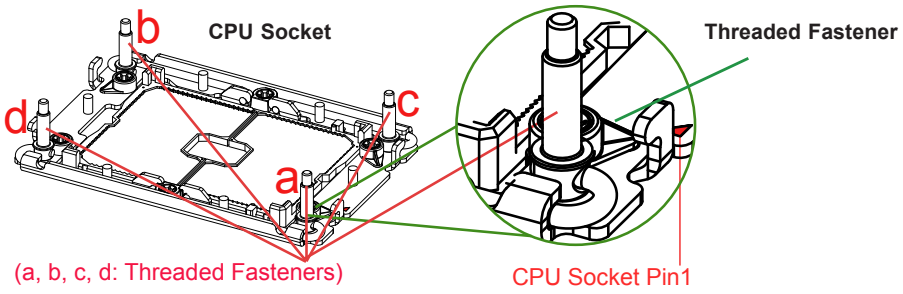

3. Locate four PEEK nuts (A, B, C, D) and four rotating wires (1, 2, 3, 4) on the heatsink as shown below.

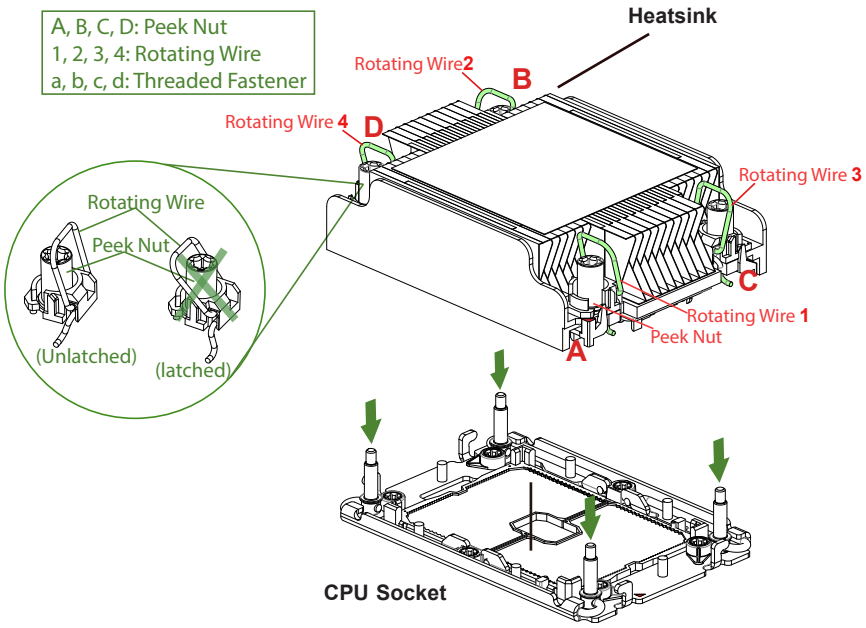

4. Check that the rotating wires (1, 2, 3, 4) are in the unlatched position as shown.

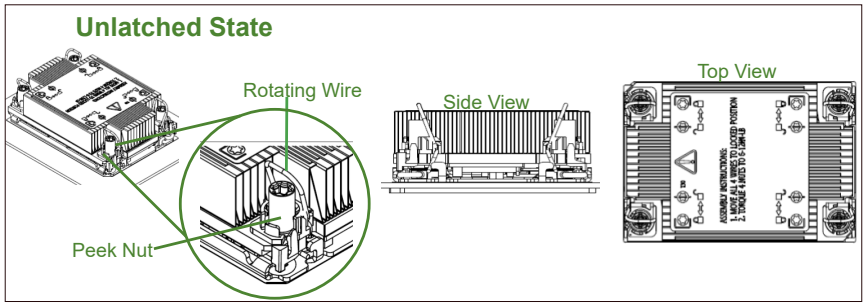

5. Align nut A (next to the triangles and pin 1) on the heatsink with threaded fastener "a" on the CPU socket. Also align nuts B, C, D on the heatsink with threaded fasteners b, c, d on the CPU socket.

6. Gently place the heatsink on the CPU socket, making sure that each nut is properly aligned with its corresponding threaded fastener.

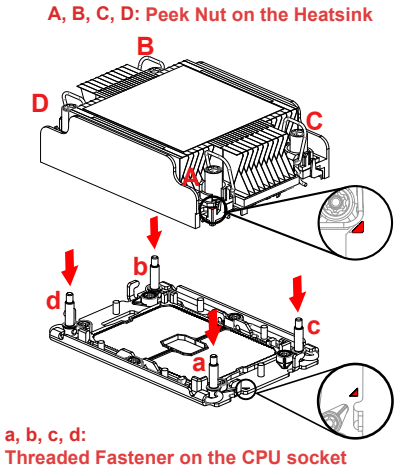

7. Press all four rotating wires outward to latch the PHM onto the CPU socket.

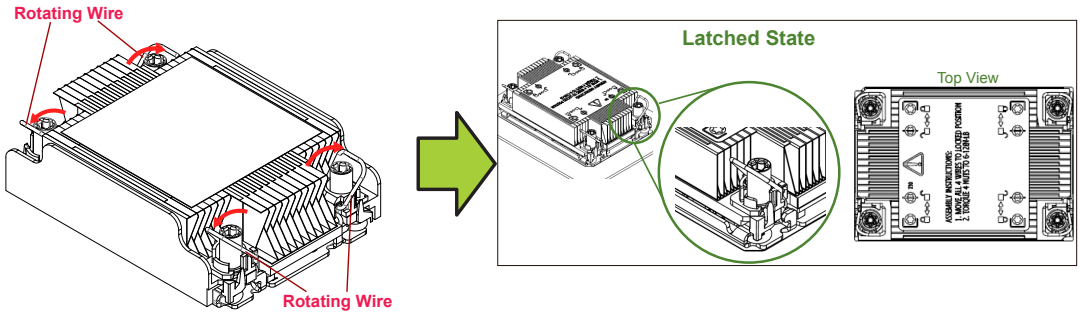

8. With a t30-bit screwdriver, tighten all PEEK nuts in the sequence of A, B, C, and D with even pressure not greater than 12 lbf-in.

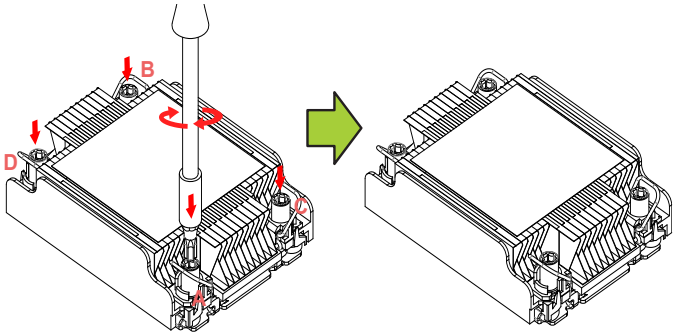

Removing the PHM from the CPU Socket

Be sure the system is shut down and all AC power cords are unplugged.

1. Use a t30-bit screwdriver to loosen the four PEEK nuts on the heatsink in the sequence of A, B, C, and D.

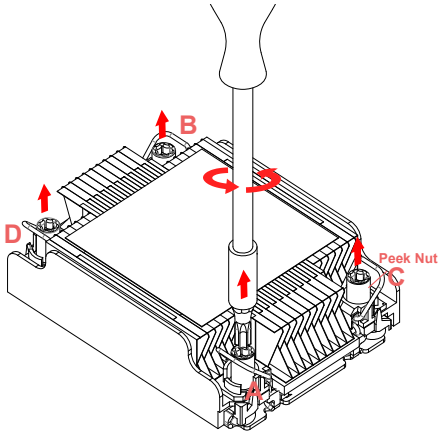

2. Press the four rotating wires inward to unlatch the PHM as shown below.

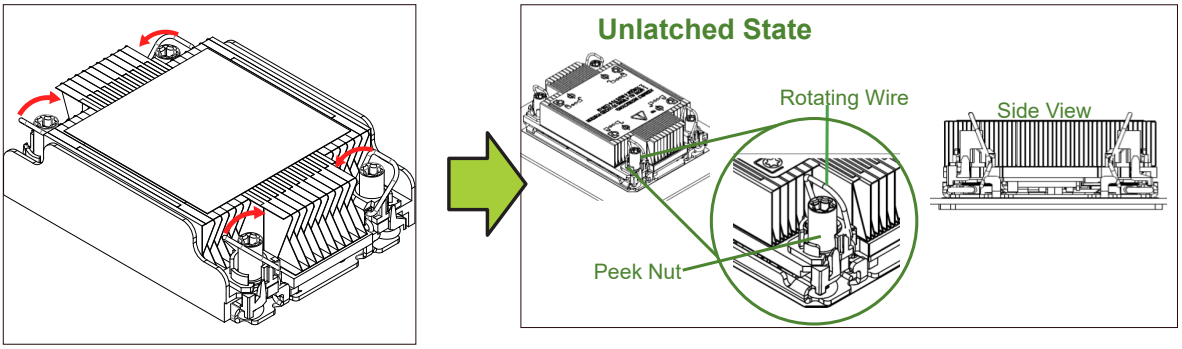

3. Gently lift the PHM upward to remove it from the CPU socket.

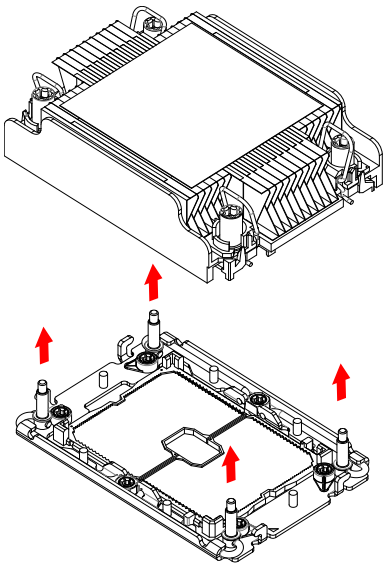

Removing the Processor Carrier Assembly from the PHM

Detach the four plastic clips (a, b, c, d) on the processor carrier assembly from the four corners of the heatsink (A, B, C, D) as shown below, and lift off the processor carrier assembly.

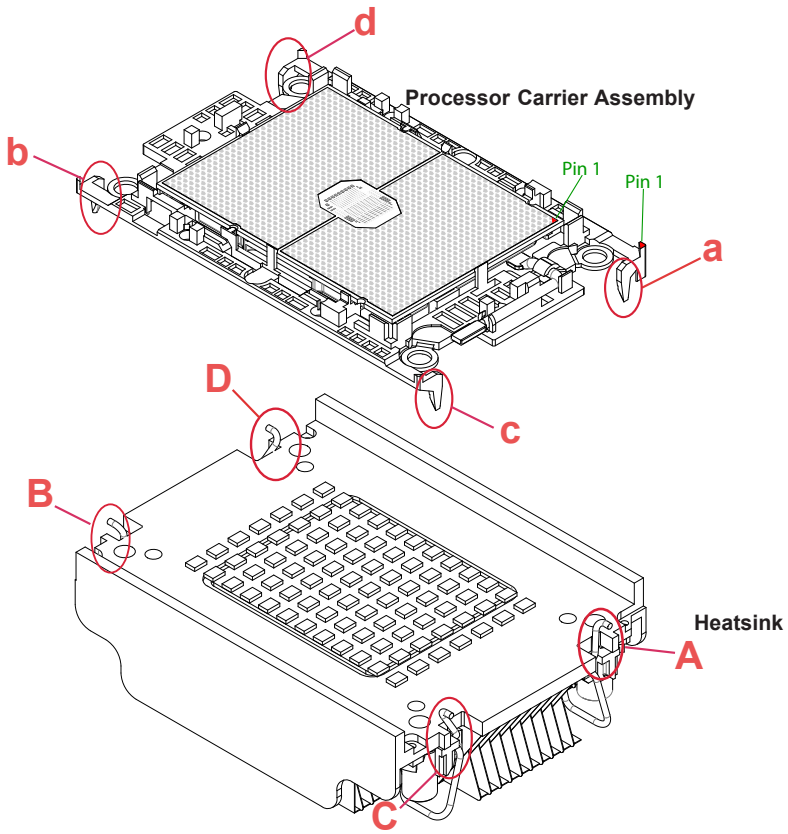

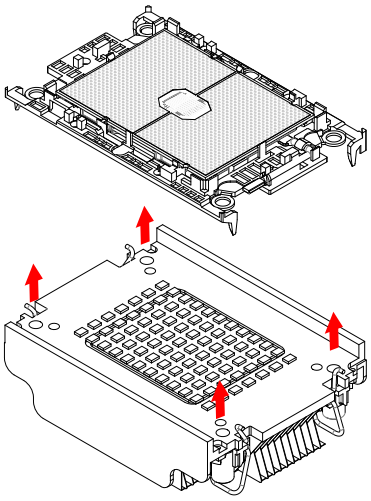

Removing the Processor from the Carrier Assembly

Unlock the lever from its locked position and push it upwards to disengage the processor from the carrier as shown below right. Carefully remove the processor from the carrier.

Processor Carrier Assembly

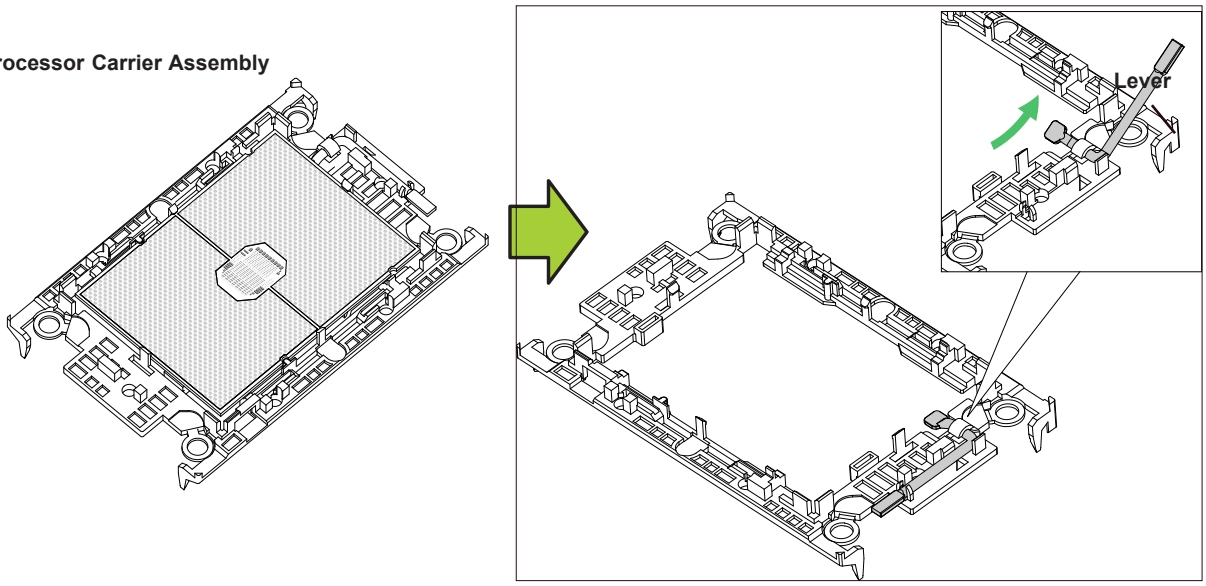

Note: Handle the processor with care to avoid damage.

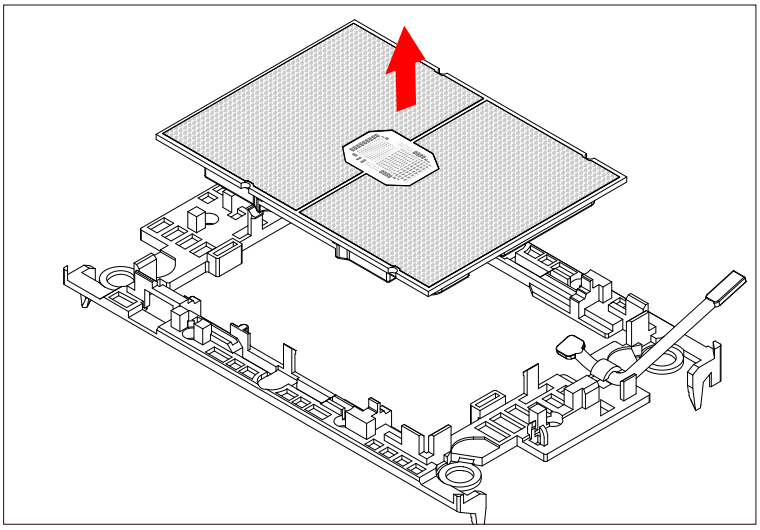

3.4 Memory

Memory Support

The X12DPU-6 motherboard has 32 DIMM slots. It supports up to

- 8TB (DDR4 only): 3DS Load Reduced DIMM (3DS LRDIMM), 3DS Registered DIMM (3DS RDIMM), or Non-Volatile DIMMs (NV-DIMM) ECC memory with speeds of up to 3200 MHz.
- 12TB (PMem + DDR4): 8TB of Intel Optane PMem 200 series (on Platinum, Gold and selected Silver processors only) plus 4TB of DDR4.

For validated memory, use our Product Resources page.

DDR4 Memory Support for 83xx/63xx/53xx/43xx Processors					
Type	**Ranks Per DIMM and Data Width**	**DIMM Capacity (GB)**		**Speed (MT/s) and Voltage**	
		DRAM Density		**One DIMM per Channel**	**Two DIMMs per Channel**
		8Gb	**16Gb**	**1.2V**	**1.2V**
RDIMM	SRx8	8GB	16GB	3200*	3200*
	SRx4	16GB	32GB		
	DRx8	16GB	32GB		
	DRx4	32GB	64GB		
RDIMM 3Ds	(4R/8R) x4	2H-64GB 4H-128GB	2H-128GB 4H-256GB		
LRDIMM	QRx4	64GB	128GB		
LRDIMM 3Ds	(4R/8R) x4	4H-128GB	2H-128GB 4H-256GB		

*Only the 83xx and 63xx series support 3200MT/s; for other processors, memory speed as supported by the CPU.

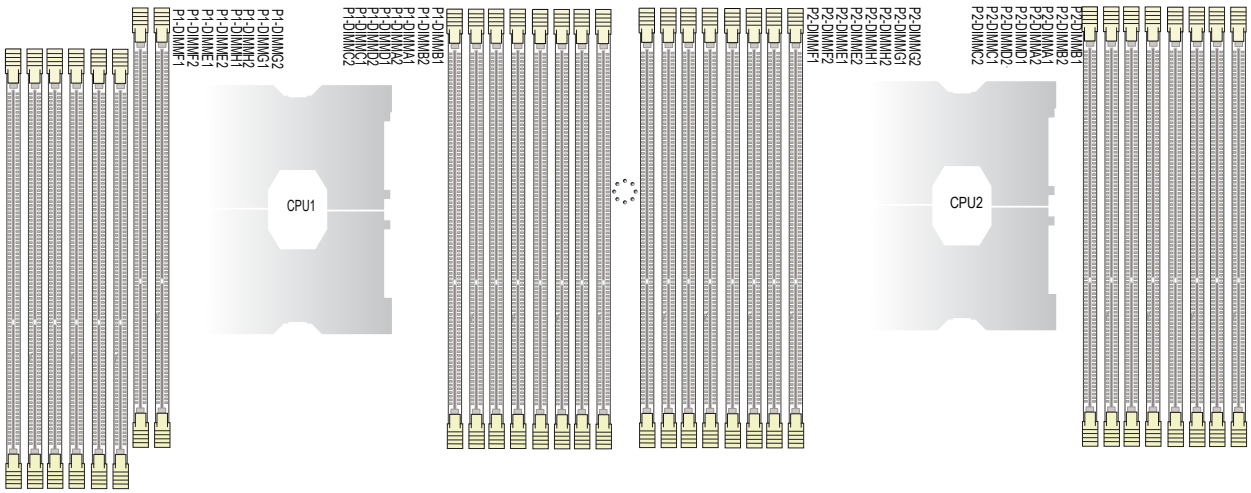

Figure 3-3. Memory Slots

Guidelines Regarding Mixing DIMMs

- All DIMMs must be DDR4 or a mixture of PMem and DDR4.
- x4 and x8 DIMMs can be mixed in the same channel.
- Mixing of LRDIMMs and RDIMMs is not allowed in the same channel, across different channels, and across different sockets.
- Mixing of non-3DS and 3DS LRDIMM is not allowed in the same channel, across different channels, and across different sockets.
- Mixing of PMem modules and RDIMMs is supported
- Mixing DDR4 and PMem memory operating frequencies is not validated within a socket or across sockets. If DIMMs of different frequencies are mixed in the same channel, all DIMs will run at the highest common frequency.
- Always populate the DIMM with the higher electrical loading on a channel in DIMMx1 (farther from CPU) followed by DIMMx2.

DDR4 Memory Population Guidelines

The following memory population table was created based on guidelines provided by Intel to support Supermicro motherboards.

Memory Population for DDR4-only Configurations, 32 DIMM Slots	
CPUs/DIMMs	**DIMM Slots**
2 CPUs & 2 DIMMs*	CPU1: A1 CPU2: A1
2 CPUs & 4 DIMMs*	CPU1: A1, E1 CPU2: A1, E1
2 CPUs & 6 DIMMs	CPU1: A1, C1, E1, G1 CPU2: A1, E1
2 CPUs & 8 DIMMs*	CPU1: A1, C1, E1, G1 CPU2: A1, C1, E1, G1
2 CPUs & 10 DIMMs	CPU1: A1, B1, C1, E1, F1, G1 CPU2: A1, C1, E1, G1
2 CPUs & 12 DIMMs*	CPU1: A1, B1, C1, E1, F1, G1 CPU2: A1, B1, C1, E1, F1, G1
2 CPUs & 14 DIMMs	CPU1: A1, B1, C1, D1, E1, F1, G1, H1 CPU2: A1, B1, C1, E1, F1, G1
2 CPUs & 16 DIMMs*	CPU1: A1, B1, C1, D1, E1, F1, G1, H1 CPU2: A1, B1, C1, D1, E1, F1, G1, H1
2 CPUs & 18 DIMMs	CPU1: A1, A2, B1, C1, C2, D1, E1, E2, F1, G1, G2, H1 CPU2: A1, B1, C1, E1, F1, G1
2 CPUs & 20 DIMMs	CPU1: A1, A2, B1, C1, C2, D1, E1, E2, F1, G1, G2, H1 CPU2: A1, B1, C1, D1, E1, F1, G1, H1
2 CPUs & 22 DIMMs	CPU1: A1, A2, B1, B2, C1, C2, D1, D2, E1, E2, F1, F2, G1, G2, H1, H2 CPU2: A1, B1, C1, E1, F1, G1
2 CPUs & 24 DIMMs*	CPU1: A1, A2, B1, B2, C1, C2, D1, D2, E1, E2, F1, F2, G1, G2, H1, H2 CPU2: A1, B1, C1, D1, E1, F1, G1, H1
2 CPUs & 28 DIMMs	CPU1: A1, A2, B1, B2, C1, C2, D1, D2, E1, E2, F1, F2, G1, G2, H1, H2 CPU2: A1, A2, B1, C1, C2, D1, E1, E2, F1, G1, G2, H1
2 CPUs & 32 DIMMs*	CPU1: A1, A2, B1, B2, C1, C2, D1, D2, E1, E2, F1, F2, G1, G2, H1, H2 CPU2: A1, A2, B1, B2, C1, C2, D1, D2, E1, E2, F1, F2, G1, G2, H1, H2

*** recommended for optimal performance**

- Other Intel validated memory configurations are supported, although they may not provide optimal performance. See Intel documentation for more information.
- Must have at least one DIMM per CPU.

Optane PMem 200 Series

For 3rd Gen Intel Xeon Scalable Platinum, Gold and selected Silver processors

Symmetric Population for Each CPU with PMem + DDR4

DDR4 & PMem	Modes	AD interl-leve	DIMM															
			F1	F2	E1	E2	H1	H2	G1	G2	C2	C1	D2	D1	A2	A1	B2	B1
4 DDR4 4 PMem	AD MM	1 - x4	PM	-	DDR4	-	PM	-	DDR4	-	-	DDR4	-	PM	-	DDR4	-	PM
		1 - x4	DDR4	-	PM	-	DDR4	-	PM	-	-	PM	-	DDR4	-	PM	-	DDR4
6 DDR4 1 PMem	AD	One - x1	DDR4	-	DDR4	-	-	-	DDR4	-	-	DDR4	-	PM	-	DDR4	-	DDR4
			-	-	DDR4	-	DDR4	-	DDR4	-	-	DDR4	-	DDR4	-	DDR4	-	PM
			DDR4	-	DDR4	-	PM	-	DDR4	-	-	DDR4	-	-	-	DDR4	-	DDR4
			PM	-	DDR4	-	DDR4	-	DDR4	-	-	DDR4	-	DDR4	-	DDR4	-	-
			DDR4	-	DDR4	-	DDR4	-	-	-	-	PM	-	DDR4	-	DDR4	-	DDR4
			DDR4	-	-	-	DDR4	-	DDR4	-	-	DDR4	-	DDR4	-	PM	-	DDR4
			DDR4	-	DDR4	-	DDR4	-	PM	-	-	-	-	DDR4	-	DDR4	-	DDR4
			DDR4	-	PM	-	DDR4	-	DDR4	-	-	DDR4	-	DDR4	-	-	-	DDR4
8 DDR4 1 PMem	AD	One - x1	DDR4	-	DDR4	-	DDR4	-	DDR4	-	-	DDR4	-	DDR4	PM	DDR4	-	DDR4
			DDR4	-	DDR4	-	DDR4	-	DDR4	-	PM	DDR4	-	DDR4	-	DDR4	-	DDR4
			DDR4	-	DDR4	PM	DDR4	-	DDR4	-	-	DDR4	-	DDR4	-	DDR4	-	DDR4
			DDR4	-	DDR4	-	DDR4	-	DDR4	PM	-	DDR4	-	DDR4	-	DDR4	-	DDR4
			DDR4	-	DDR4	-	DDR4	-	DDR4	-	-	DDR4	PM	DDR4	-	DDR4	-	DDR4
			DDR4	-	DDR4	-	DDR4	-	DDR4	-	-	DDR4	-	DDR4	-	DDR4	PM	DDR4
			DDR4	PM	DDR4	-	DDR4	-	DDR4	-	-	DDR4	-	DDR4	-	DDR4	-	DDR4
			DDR4	-	DDR4	-	DDR4	PM	DDR4	-	-	DDR4	-	DDR4	-	DDR4	-	DDR4
8 DDR4 4 PMem	AD MM	1 - x4	DDR4	-	DDR4	PM	DDR4	-	DDR4	PM	PM	DDR4	-	DDR4	PM	DDR4	-	DDR4
		2 - x2	DDR4	-	DDR4	PM	DDR4	PM	DDR4	-	-	DDR4	PM	DDR4	PM	DDR4	-	DDR4
		1 - x4	DDR4	PM	DDR4		DDR4	-	DDR4	PM	PM	DDR4	-	DDR4	-	DDR4	PM	DDR4
		2 - x2	DDR4	PM	DDR4	-	DDR4	PM	DDR4	-	-	DDR4	PM	DDR4	-	DDR4	PM	DDR4
8 DDR4 8 PMem	AD MM	One - x8	DDR4	PM	DDR4	PM	DDR4	PM	DDR4	PM	PM	DDR4	PM	DDR4	PM	DDR4	PM	DDR4
12 DDR4 2 PMem	AD	One - x2	PM	-	DDR4	DDR4	DDR4	DDR4	DDR4	DDR4	DDR4	DDR4	DDR4	DDR4	DDR4	DDR4	-	PM
			DDR4	DDR4	DDR4	DDR4	PM	-	DDR4	DDR4	DDR4	DDR4	-	PM	DDR4	DDR4	DDR4	DDR4
			DDR4	DDR4	PM	-	DDR4	DDR4	DDR4	DDR4	DDR4	DDR4	DDR4	DDR4	-	PM	DDR4	DDR4
			DDR4	DDR4	DDR4	DDR4	DDR4	DDR4	PM	-	-	PM	DDR4	DDR4	DDR4	DDR4	DDR4	DDR4

AD: App Direct, MM: Memory Mode, PM: PMem

Validation Matrix (DDR4 DIMMs Validated with PMem 200 Series)

DIMM Type (up to 3200)	Ranks Per DIMM & Data Width (Stack)	DIMM Capacity (GB)	
		DRAM Density	
		8Gb	16Gb
RDIMM	1Rx8	N/A	N/A
	1Rx4	16GB	32GB
	2Rx8	16GB	32GB
	2Rx4	32GB	64GB
RDIMM 3DS	4Rx4 (2H)	N/A	128GB
	8Rx4 (4H)	NA	256GB
LRDIMM	4Rx4	64GB	128GB
LRDIMM 3DS	4Rx4 (2H)	N/A	N/A
	8Rx4 (4H)	128GB	256GB

PMem Notes

- PMem 200 Series are supported on 3rd gen Intel Xeon Scalable Platinum, Gold and selected Silver processors.
- Do not mix PMem and NVDIMMs within the platform.
- For MM, NM/FM ratio is between 1:4 and 1:16. The capacity not used for FM can be used for AD. (NM = Near Memory; FM = Far Memory).
- Matrix targets configs for optimized PMem to DRAM cache ratio in MM and MM + AD modes.
- For each individual population, different PMem rearrangements among channels are permitted so long as the configuration does not break X12 DP Memory population rules.
- Ensure the same DDR4 DIMM type and capacity are used for each DDR4 + PMem population.
- If the system detects an unvalidated config, then the system issues a BIOS warning. The CLI functionality is limited in non-POR configurations, and select commands will not be supported.
- x4 and x8 DDR4 DIMMs cannot be mixed in the same channel in PMem configurations.

Installing Memory

ESD Precautions

Electrostatic Discharge (ESD) can damage electronic components including memory modules. To avoid damaging DIMM modules, it is important to handle them carefully. The following measures are generally sufficient.

- Use a grounded wrist strap designed to prevent static discharge.
- Handle the memory module by its edges only.
- Put the memory modules into the antistatic bags when not in use.

Installing Memory

Begin by removing power from the system as described in Section 3.1. Follow the memory population sequence in the table above.

1. Push the release tabs outwards on both ends of the DIMM slot to unlock it.

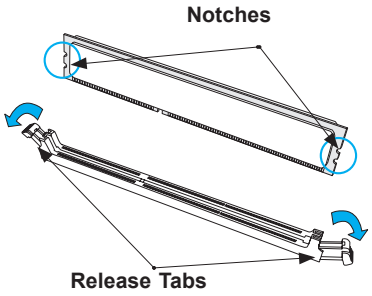

2. Align the key of the DIMM with the receptive point on the memory slot and with your thumbs on both ends of the module, press it straight down into the slot until the module snaps into place.

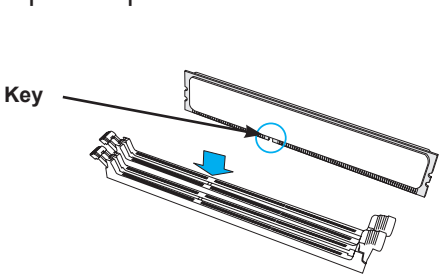

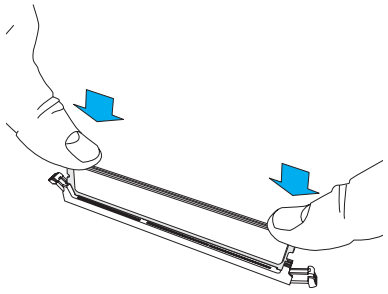

3. Press the release tabs to the locked position to secure the DIMM module into the slot.

Caution: Exercise extreme caution when installing or removing memory modules to prevent damage to the DIMMs or slots.

Removing Memory

To remove a DIMM, unlock the release tabs then pull the DIMM from the memory slot.

3.5 Motherboard Battery

The motherboard uses non-volatile memory to retain system information when system power is removed. This memory is powered by a lithium battery residing on the motherboard.

Replacing the Battery

Begin by removing power from the system.

1. Push aside the small clamp that covers the edge of the battery. When the battery is released, lift it out of the holder.
2. To insert a new battery, slide one edge under the lip of the holder with the positive (+) side facing up. Then push the other side down until the clamp snaps over it.

Note: Handle used batteries carefully. Do not damage the battery in any way; a damaged battery may release hazardous materials into the environment. Do not discard a used battery in the garbage or a public landfill. Please comply with the regulations set up by your local hazardous waste management agency to dispose of your used battery properly.

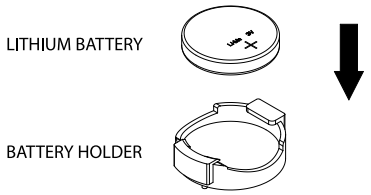

Figure 3-4. Installing the Onboard Battery

Warning: There is a danger of explosion if the onboard battery is installed upside down (which reverses its polarities). This battery must be replaced only with the same or an equivalent type recommended by the manufacturer (CR2032).

3.6 Storage Drives

The system supports 24 hot-swap 2.5" storage drives—20 NVMe and 4 hybrid ports for NVMe direct attached storage For compatible storage drives, see the X12DPU-6 motherboard page. **Note**: In systems using a CPU with greater than 205W TDP or GPU cards, HDDs may experience reduced performance. SSD drives are recommended for these configurations.

The drives are mounted in toolless drive carriers that simplify their removal from the chassis. These carriers also help promote proper airflow.

Note: Enterprise level hard disk drives are recommended for use in Supermicro chassis and servers. For information on recommended HDDs, visit the Supermicro website product pages at https://www.supermicro.com/products/nfo/Ultra.cfm.

Installing Drives



Figure 3-5. Logical Drive Numbers

Removing a Hot-Swap Drive Carrier from the Chassis

1. Press the release button on the drive carrier, which will extend the drive carrier handle.
2. Use the drive carrier handle to pull the drive out of the chassis.

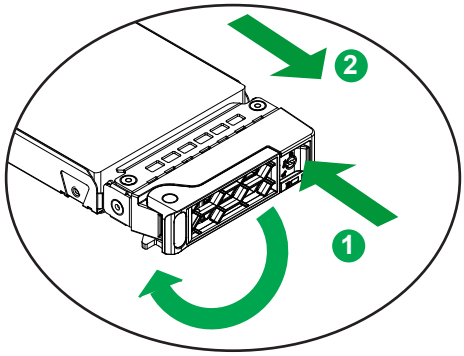

Figure 3-6. Removing a Drive Carrier

Installing a Drive

1. Remove the dummy drive, which comes pre-installed in the drive carrier.

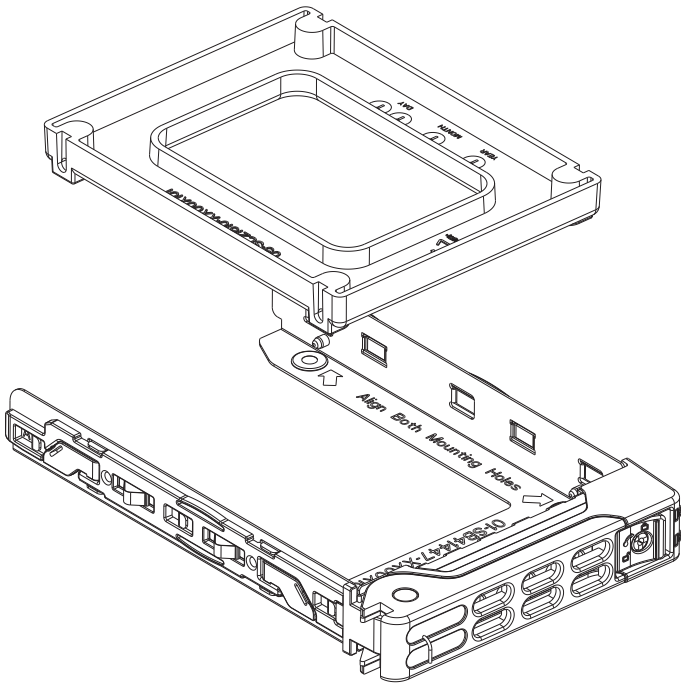

Figure 3-7. Removing the Dummy Drive from a Carrier

2. Insert a drive into the carrier with the PCB side facing down and the connector end toward the rear of the carrier. Align the drive in the carrier so that the carrier pins line up.

3. Insert the drive carrier with the disk drive into its bay, keeping the carrier oriented so that the release button is on the right side. When the carrier reaches the rear of the bay, the release handle will retract.

4. Push the handle in until it clicks into its locked position.

Checking the Temperature of an NVMe Drive

There are two ways to check using the BMC Dashboard.

Checking a Drive

- **BMC Dashboard > Server Health > NVMe SSD –** Shows the temperatures of all NVMe drives.

- **BMC Dashboard > Server Health > Sensor Reading > NVME_SSD –** Shows the single highest temperature among all the NVMe drives.

Hot-Swap for NVMe Drives

Supermicro Ultra servers support NVMe surprise hot-swap. For even better data security, NVMe orderly hot-swap is recommended. NVMe drives can be ejected and replaced remotely using the BMC Dashboard.

Note: If you are using VROC, see the VROC section in this manual instead.

Ejecting a Drive

1. **BMC Dashboard > Server Health > NVMe SSD**
2. Select Device, Group and Slot, and click **Eject**. After ejecting, the drive Status LED indicator turns green.
3. Remove the drive.

Note that *Device* and *Group* are categorized by the CPLD design architecture.

Slot is the slot number on which the NVMe drives are mounted.

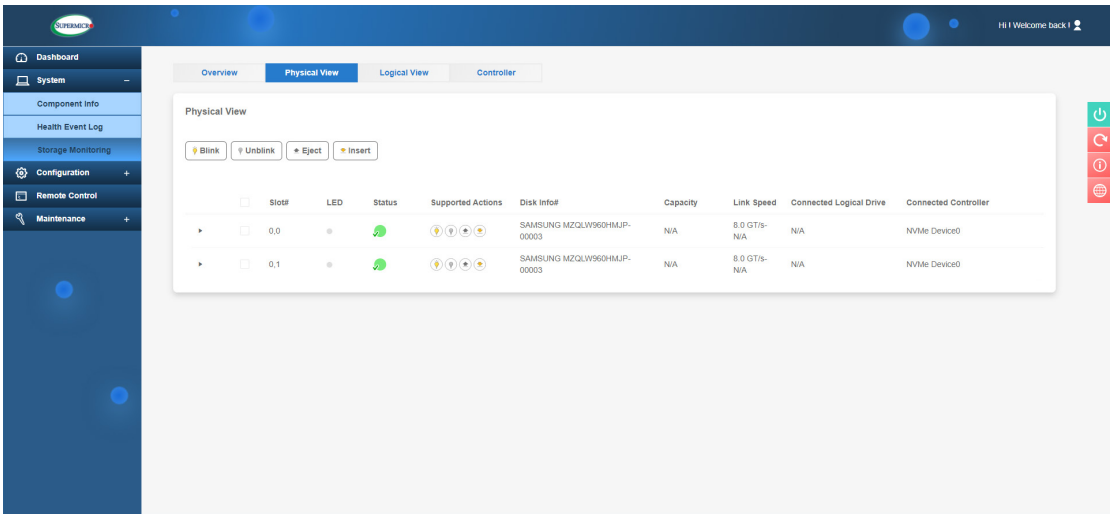

Figure 3-8. BMC Dashboard Screenshot

Replacing the Drive

1. Insert the replacement drive.
2. **BMC Dashboard > Server Health > NVMe SSD**
3. Select Device, Group and slot and click **Insert**. The drive Status LED indicator flashes red, then turns off. The Activity LED turns blue.

3.7 System Cooling

Fans

The chassis contains four 8-cm high-performance fans. Fan speed is controlled by the BMC depending on the system temperature. If a fan fails, the remaining fans will ramp up to full speed. The system will continue to run with a failed fan, although it may shut down if the heat gets too great. Replace any failed fan at your earliest convenience with the same model. Failed fans can be identified through the BMC.

Changing a System Fan

1. Determine which fan has failed using the BMC, or if necessary, open the chassis while the system is running. Never run the server for long without the chassis cover.
2. Push the release tab and pull the failed fan from the chassis. Fans can be replaced while the system is running.
3. Replace the failed fan with an identical fan, available from Supermicro. Push the new fan into the housing, making sure the air flow direction is the same.
4. Power up the system and check that the fan is working properly and that the LED on the control panel has turned off. Finish by replacing the chassis cover.

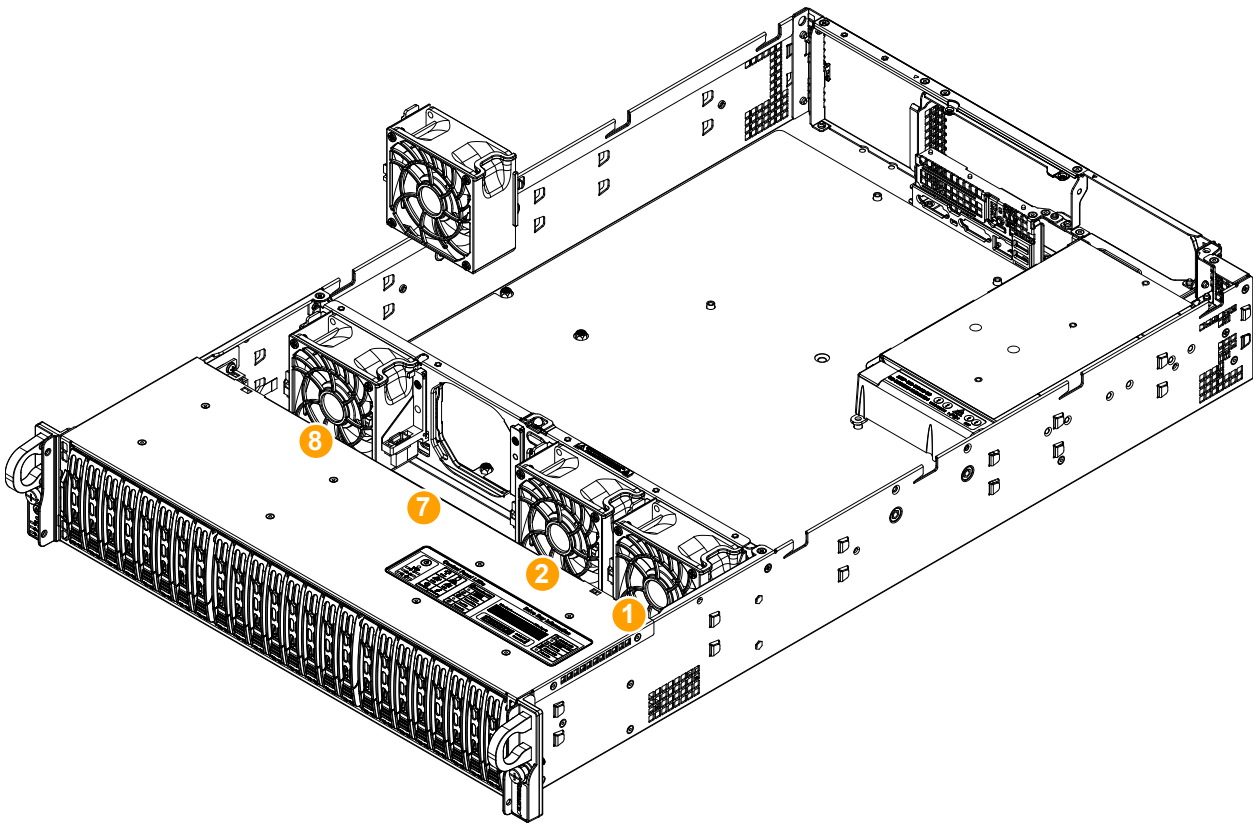

Figure 3-9. Fan Positions and Numbering

Air Shrouds

Air shrouds concentrate airflow to maximize fan efficiency. They do not require screws to install.

Installing the Standard Air Shrouds

- Position the air shrouds as illustrated in the figure below.

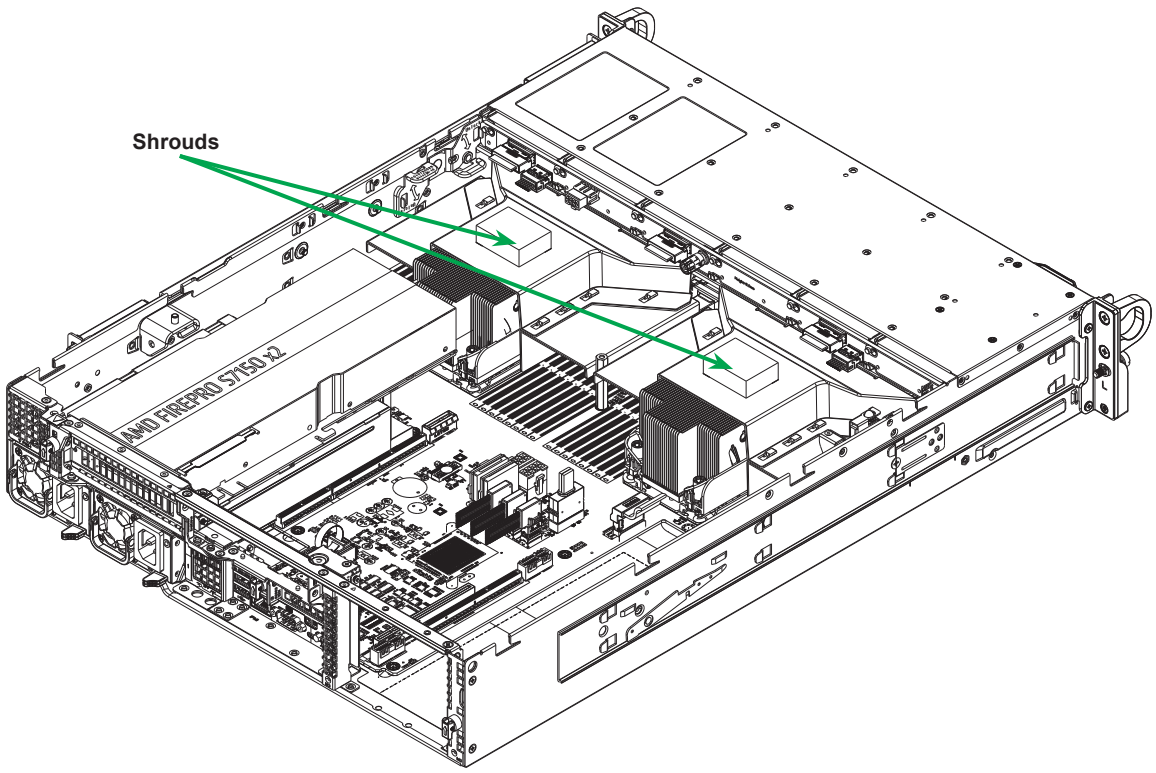

Figure 3-10. Installing the Standard Air Shrouds

3.8 Power Supply

The chassis features redundant power supplies. The system will continue to operate if one module fails. It should be replaced as soon as convenient. The power supply modules are hot-swappable, meaning they can be changed without powering down the system. New units can be ordered directly from Supermicro or authorized distributors.

These power supplies are auto-switching capable. This feature enables them to automatically sense the input voltage and operate at a 100-120v or 180-240v.

Power Supply LEDs

On the rear of the power supply module, an LED displays the status.

- **Solid Green**: When illuminated, indicates that the power supply is on.
- **Blinking Green**: When blinking, indicates that the power supply is plugged in and turned off by the system.
- **Blinking Amber:** When blinking, indicates that the power supply has a warning condition and continues to operate.
- **Solid Amber**: When illuminated, indicates that the power supply is plugged in, and is in an abnormal state. The system might need service. Please contact Supermicro technical support.

Changing the Power Supply Module:

1. Unplug the AC cord from the module to be replaced.
2. On the back of the module, push the release tab sideways, as illustrated.
3. Pull the module out using the handle.
4. Push the new power supply module into the power bay until it clicks. Replace with the same model.
5. Plug the AC power cord back into the module.

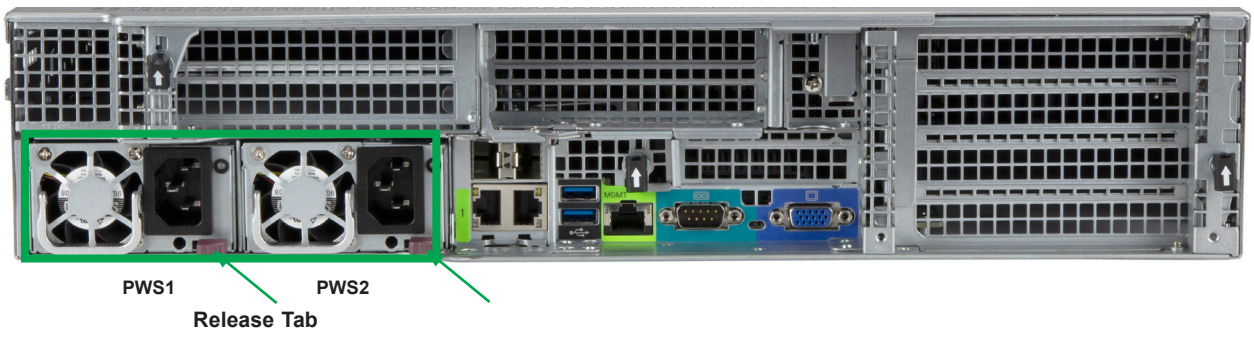

Figure 3-11. Replacing the Power Supply

3.9. PCI Expansion Slots

This system offers options for riser cards that provide custom PCIe capabilities—one Ultra Riser card, one right-facing WIO riser card, and one left-facing WIO card.

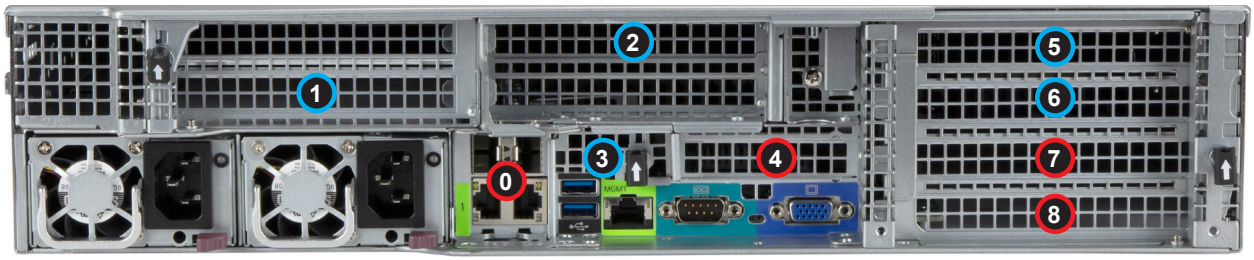

Figure 3-12. Expansion Card Chassis Slots

PCIe Slots per Riser Card			
Riser Card	**Part Number**	**Slot**	**Description (all PCIe 4.0)**
Ultra Riser card	AOC-2UR668G4	1 2 3	x16 FH, 10.5"L, 75W (CPU2) x16 FH, 10.5"L, 75W (CPU2) x8 (in x16), Internal LP, 75W (CPU1)
	AOC-2UR68G4-i2XT AOC-2UR68G4-i4XTS AOC-2UR68G4-m2TS	1 2 3	x16 FH, 10.5"L, 75W (CPU2) x8 (in x16) FH, 10.5"L, 75W (CPU2) x8 (in x16) Internal LP, 75W (CPU2)
Right-facing	RSC-WR-6	4	x16 low profile, 75W (CPU1)
Left-facing	RSC-W2-8888G4	5 6 7 8	x8 FH, 10.5"L, 25W (CPU2) x8 FH, 10.5"L, 25W (CPU2) x8 FH, 10.5"L, 25W (CPU1) x8 FH, 10.5"L, 25W (CPU1)
	RSC-W2-688G4	5 7 8	x16 FH, 10.5"L, 75W (CPU2) x8 (in x16) FH, 10.5"L, 75W (CPU1) x8 (in x16) FH, 10.5"L, 75W (CPU1)
	RSC-W2-66G4	5 7	x16 FH, 10.5", 75W (CPU2) x16 FH, 10.5", 75W (CPU1)

One riser card slot may be used for a controller card that supports SAS. Up to three slots may be used for retimer cards to support NMVe drive bays.

The x16 slots can be enabled as *high power*, and can support up to 75W. Power greater than 75W must be supplied by an auxiliary power source.

The Ultra Riser card interface has a limit of 13A on 12V. A maximum of two 75W cards and one 25W card can be supported in Slots 1-3 at the same time.

Installing Full Height Expansion Cards

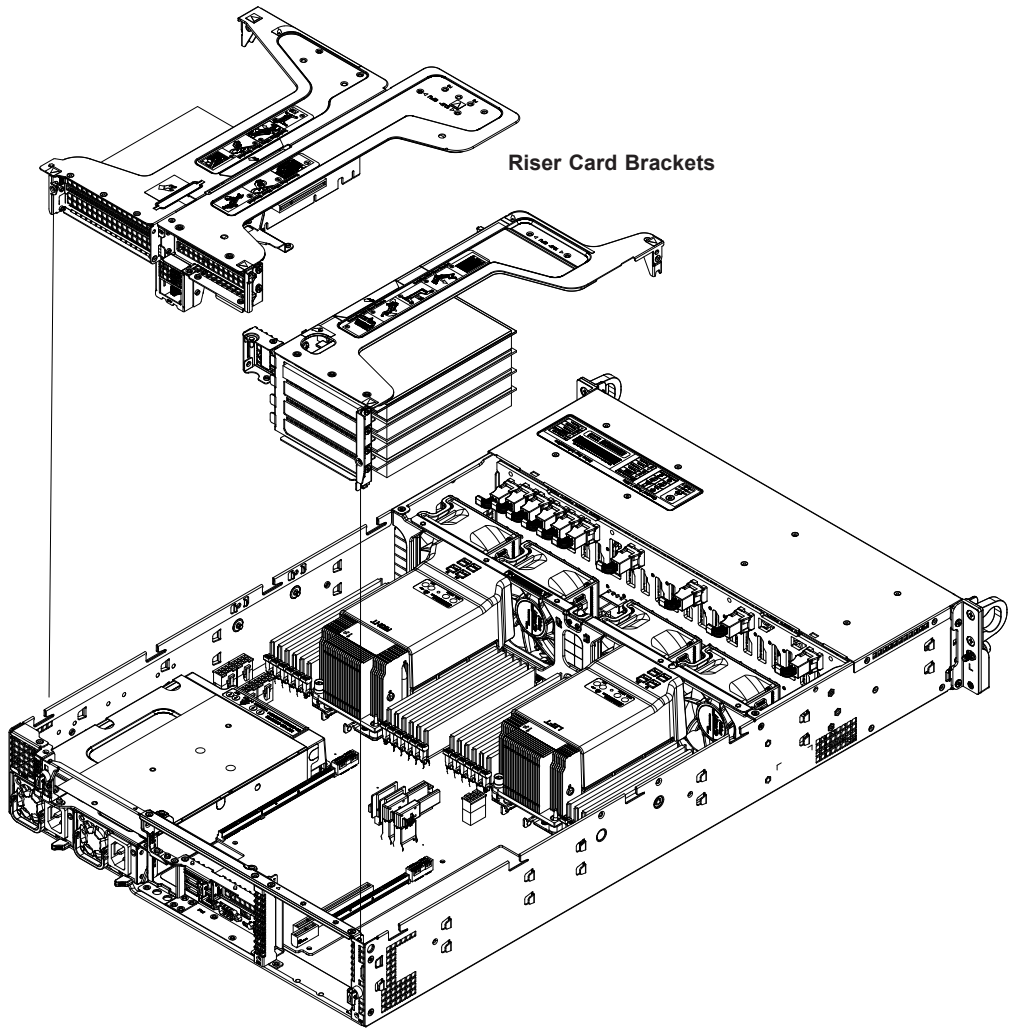

Figure 3-13. Installing Expansion Cards

Installing PCI Expansion Cards

1. Power down the system and remove the top chassis cover.
2. Remove the riser card bracket, pictured above. On the rear of the chassis, each bracket is secured by a small black plastic flip-lever with an arrow on it. Flip open the appropriate lever to release the bracket, then pull the bracket out of the chassis.
3. Insert the expansion card(s) into the riser card slot(s) while aligning the rear PCI shield.
4. Replace the riser card into the motherboard expansion slot while aligning the bracket into the chassis. Flip the black plastic lever back in place, making sure it snaps closed with a click.
5. Replace the chassis cover.

Installing the Low Profile Center Expansion Card

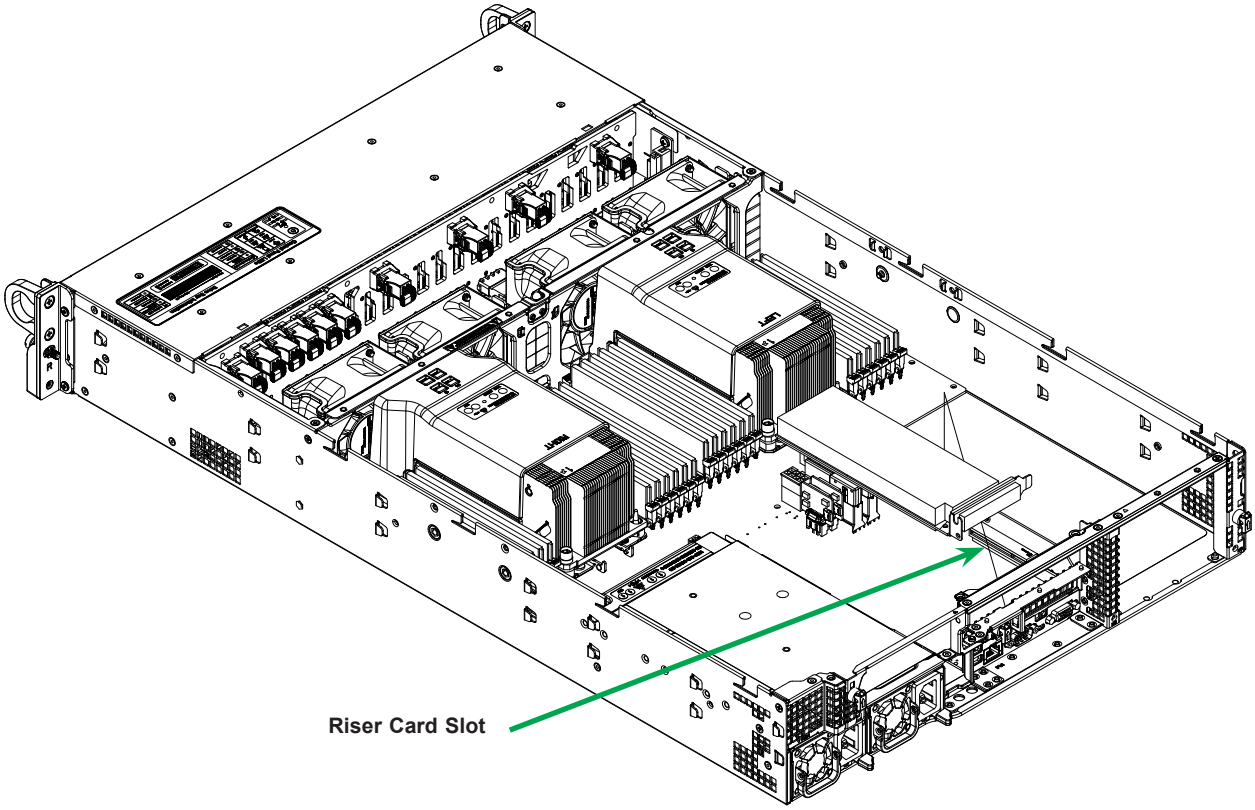

Figure 3-14. Installing Low Profile Expansion Card

Installing the Low Profile PCI Expansion Card (❹)

1. Power down the system and remove the top chassis cover.
2. If necessary, remove the full height expansion card to access the low profile riser card slot, pictured above.
3. Insert the expansion card into the riser card slot while aligning the rear PCI shield into the chassis. Add the screw to secure the PCI shield.
4. Replace the full height expansion card above the low profile card if necessary, then replace the chassis cover.

Installing the Internal Expansion Card

For most models, the Ultra riser card that holds the LAN ports also offers another internal low profile card slot (❸). Installation is pictured below.

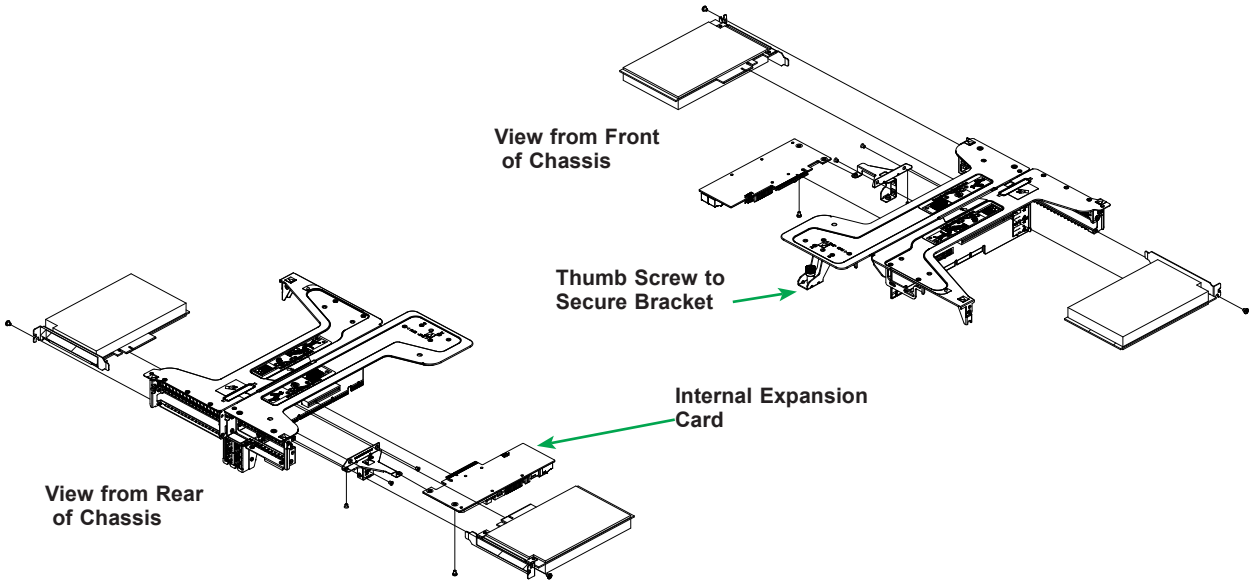

Figure 3-15. Ultra Riser Bracket and Expansion Cards

See previous procedures for details to access the riser card and bracket.

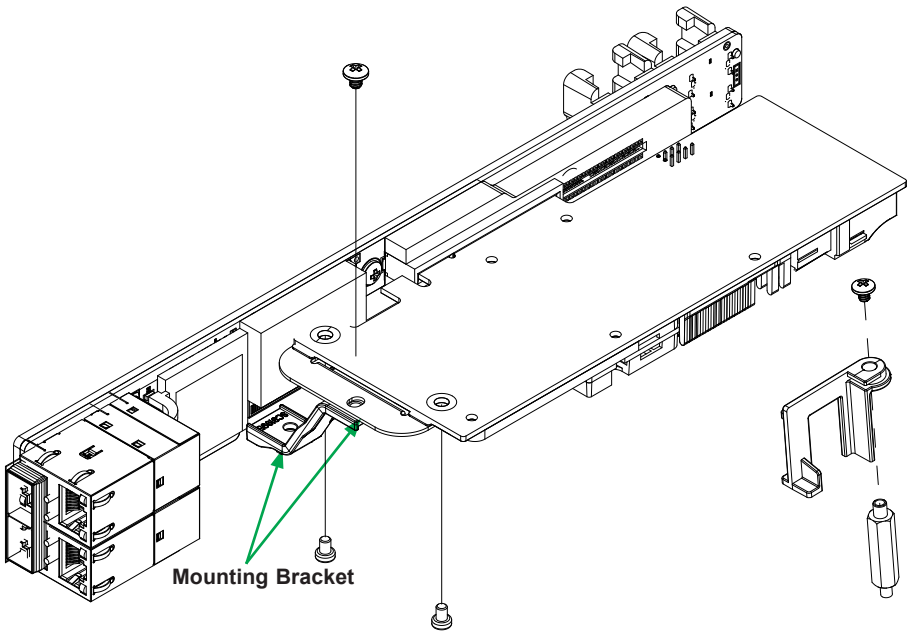

Figure 3-16. Bracket for Mounting an Internal Expansion Card on the Ultra Riser Card
(four-port Ultra card shown in this example)

Ultra Riser and Expansion Cards with Optional Storage Drives

This server supports an option to add two storage drives in place of expansion cards.

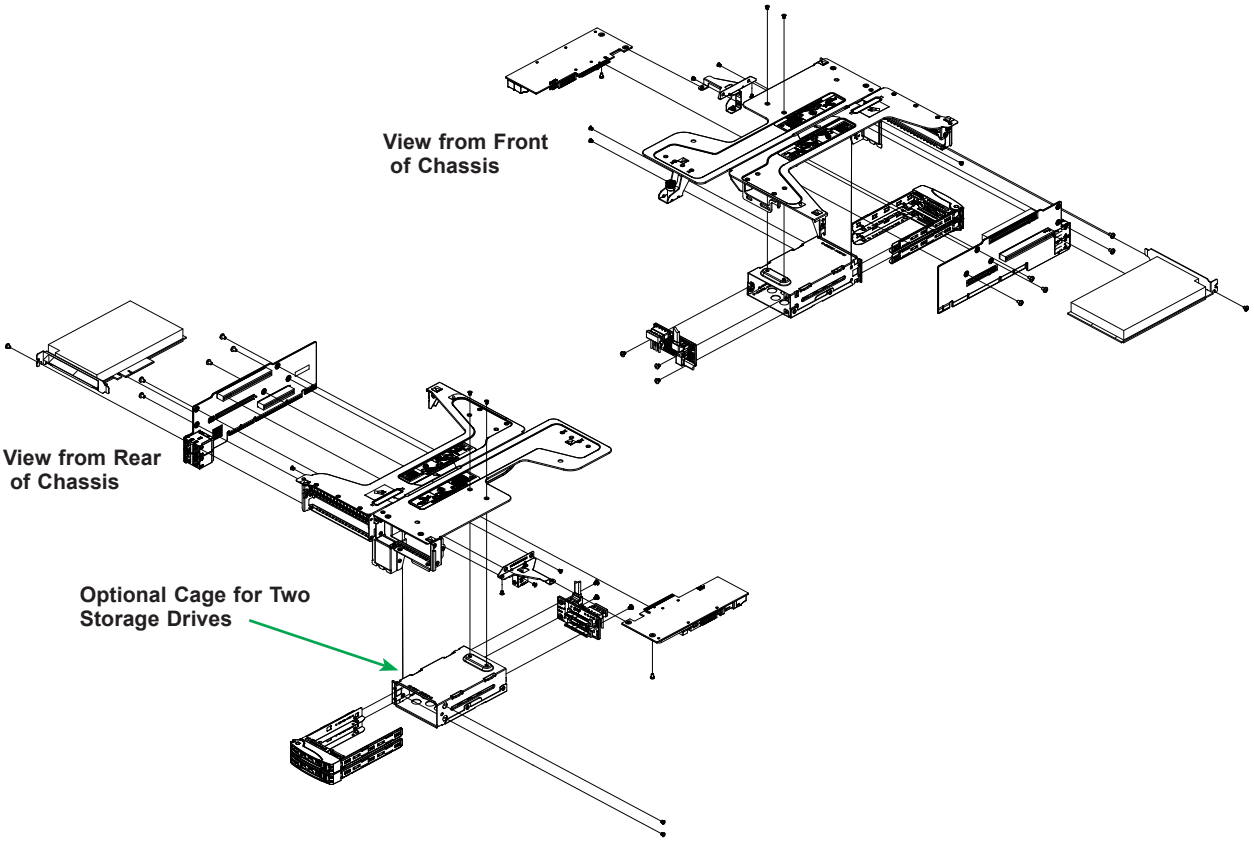

Figure 3-17. Ultra Riser and Expansion Cards with Optional Storage Drives

Removing the Ultra Riser Card

To remove the Ultra riser card from the motherboard, remove one screw and lift carefully with two hands.

3.10 Cable Routing Diagram

Use this section to route or reroute cables. Proper routing is important to maintain airflow through the system.

Front Panel Control Cable

Online Cable Matrix

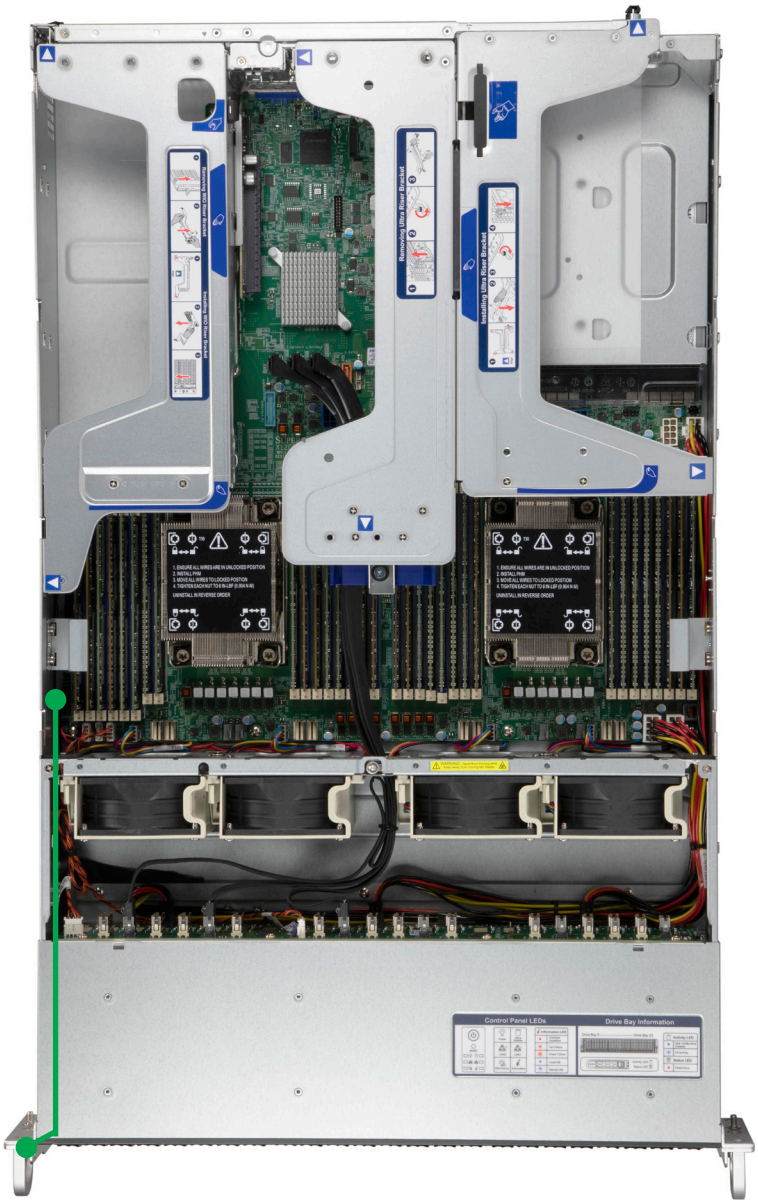

Figure 3-18. Cable Routing Diagram

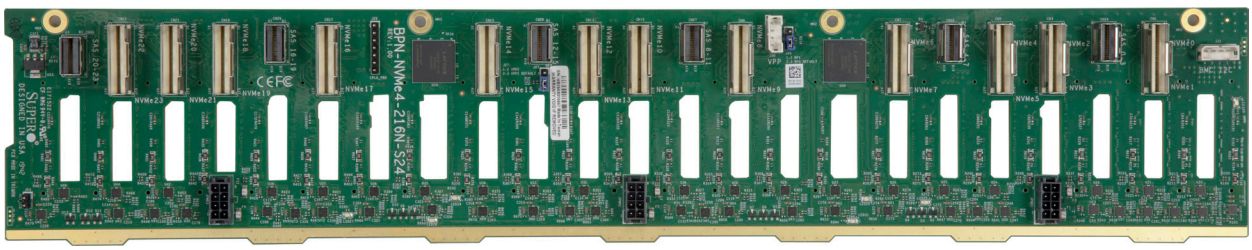

Figure 3-19. Storage Backplane BPN-NVMe4-216N-S24

NVMe Storage Cable Routing

220U-TNR with X12DPU-6 v1.01/1.02 with No NIC Riser--> NVMe connection

	MB/RSC side			BPN side				
Cable #	Connector	Type	Port	Connector	Type	Port	Length	Part Number
1	SlimlineLP x8	RA	P1_NVME1	SlimlineLP x8	LE	NVMe 2,3	53	CBL-SAST-1253-85
2	SlimlineLP x8	STR	(Re-timer) Slot #4 NVMe 0,1	SlimlineLP x8	LE	NVMe 4,5	57	CBL-SAST-1259-85
3	SlimlineLP x8	STR	(Re-timer) Slot #4 NVMe 2,3	SlimlineLP x8	LE	NVMe 6,7	57	CBL-SAST-1259-85
4	2x SlimlineLP x4	STR	P1_NVME3, P1_NVME4	SlimlineLP x8	LE	NVMe 8,9	P1=35 P2=34	CBL-SAST-1232-85
5	2x SlimlineLP x4	STR	P1_NVME5, P1_NVME6	SlimlineLP x8	LE	NVMe 10,11	P1=21 P2=22	CBL-SAST-1221-85
6	SlimlineLP x8	STR	(Re-timer) Slot #2 NVMe 0,1	SlimlineLP x8	LE	NVMe 12,13	51	CBL-SAST-1249-85
7	SlimlineLP x8	STR	(Re-timer) Slot #2 NVMe 2,3	SlimlineLP x8	LE	NVMe 14,15	51	CBL-SAST-1249-85
8	SlimlineLP x8	STR	(Re-timer) Slot #1 NVMe 0,1	SlimlineLP x8	LE	NVMe 16,17	60	CBL-SAST-1261-85
9	SlimlineLP x8	STR	(Re-timer) Slot #1 NVMe 2,3	SlimlineLP x8	LE	NVMe 18,19	60	CBL-SAST-1261-85
10	2x SlimlineLP x4	STR	P2_NVME7, P2_NVME8	SlimlineLP x8	LE	NVMe 20,21	P1=35 P2=34	CBL-SAST-1232-85
11	2x SlimlineLP x4	STR	P2_NVME9, P2_NVME10	SlimlineLP x8	LE	NVMe 22,23	P1=21 P2=22	CBL-SAST-1221-85
a	4-pin I2C	STR	JNVI2C3	4-pin I2C	STR	VPP	30	CBL-CDAT-0674
b	4-pin I2C	STR	JF4	4-pin I2C	STR	BMC I2C	30	CBL-CDAT-0674

*Red Highlighted: Lane Reversal. Be sure to cable per table and diagram.

VPP Signal
BMC I2C Signal
Onboard connector
Re-timer Cables (Golden Finger side)
Re-timer Cables

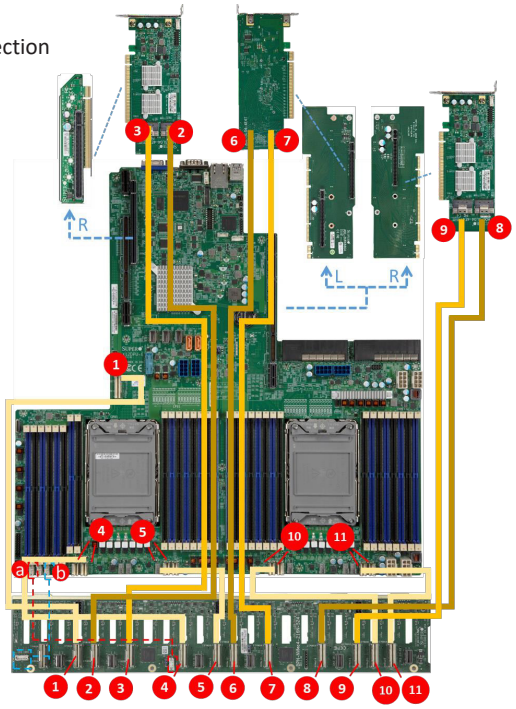

220U-TNR with X12DPU-6 v1.01/1.02 with NIC Riser--> NVMe connection

	MB/RSC side			BPN side				
Cable #	Connector	Type	Port	Connector	Type	Port	Length	Part Number
1	SlimlineLP x8	RA	P1_NVME1	SlimlineLP x8	LE	NVMe 2,3	53	CBL-SAST-1253-85
2	SlimlineLP x8	STR	(Re-timer) Slot #4 NVMe 0,1	SlimlineLP x8	LE	NVMe 4,5	57	CBL-SAST-1259-85
3	SlimlineLP x8	STR	(Re-timer) Slot #4 NVMe 2,3	SlimlineLP x8	LE	NVMe 6,7	57	CBL-SAST-1259-85
4	2x SlimlineLP x4	STR	P1_NVME3, P1_NVME4	SlimlineLP x8	LE	NVMe 8,9	P1=35 P2=34	CBL-SAST-1232-85
5	2x SlimlineLP x4	STR	P1_NVME5, P1_NVME6	SlimlineLP x8	LE	NVMe 10,11	P1=21 P2=22	CBL-SAST-1221-85
6	SlimlineLP x8	STR	(Re-timer) Slot #3 NVMe 0,1	SlimlineLP x8	LE	NVMe 12,13	51	CBL-SAST-1249-85
7	SlimlineLP x8	STR	(Re-timer) Slot #2 NVMe 0,1	SlimlineLP x8	LE	NVMe 14,15	51	CBL-SAST-1249-85
8	SlimlineLP x8	STR	(Re-timer) Slot #1 NVMe 2,3	SlimlineLP x8	LE	NVMe 16,17	60	CBL-SAST-1263-85
9	SlimlineLP x8	STR	(Re-timer) Slot #1 NVMe 0,1	SlimlineLP x8	LE	NVMe 18,19	60	CBL-SAST-1263-85
10	2x SlimlineLP x4	STR	P2_NVME7, P2_NVME8	SlimlineLP x8	LE	NVMe 20,21	P1=35 P2=34	CBL-SAST-1232-85
11	2x SlimlineLP x4	STR	P2_NVME9, P2_NVME10	SlimlineLP x8	LE	NVMe 22,23	P1=21 P2=22	CBL-SAST-1221-85
a	4-pin I2C	STR	JNVI2C3	4-pin I2C	STR	VPP	30	CBL-CDAT-0674
b	4-pin I2C	STR	JF4	4-pin I2C	STR	BMC I2C	30	CBL-CDAT-0674

*Red Highlighted: Lane Reversal. Be sure to cable per table and diagram.

VPP Signal
BMC I2C Signal
Onboard connector
Re-timer Cables (Golden Finger side)
Re-timer Cables

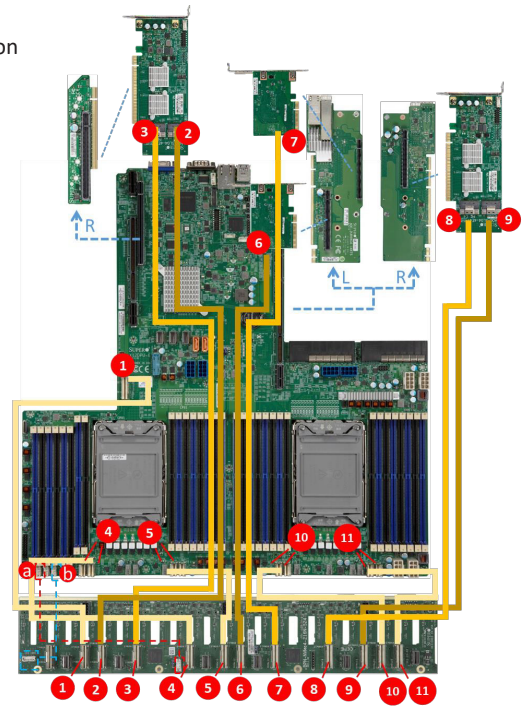

SAS/SATA Storage Cable Routing

220U-TNR --> BPN Power connection

	MB/RSC side			BPN side			
Cable #	Connector	Type	Port	Connector	Type	Port	Length
12	2x4 GPU	STR	JPW2	2x4 GPU	STR	JPWR1	55
13	2x4 GPU	STR	JPW1	2x4 GPU	STR	JPWR2	24
14	2x4 GPU	STR	JPW3	2x4 GPU	STR	JPWR3	55

220U-TNR --> SAS/SATA connection

	MB/RSC side			BPN side			
Cable #	Connector	Type	Port	Connector	Type	Port	Length
15	SlimSAS x4	RE	S-SATA 0-3	SlimSAS x4	STR	SAS 0-3	70
16	SlimSAS x4	RE	I-SATA 0-3	SlimSAS x4	STR	SAS 4-7	50
17	SlimSAS x4	RE	I-SATA 4-7	SlimSAS x4	STR	SAS 8-11	50

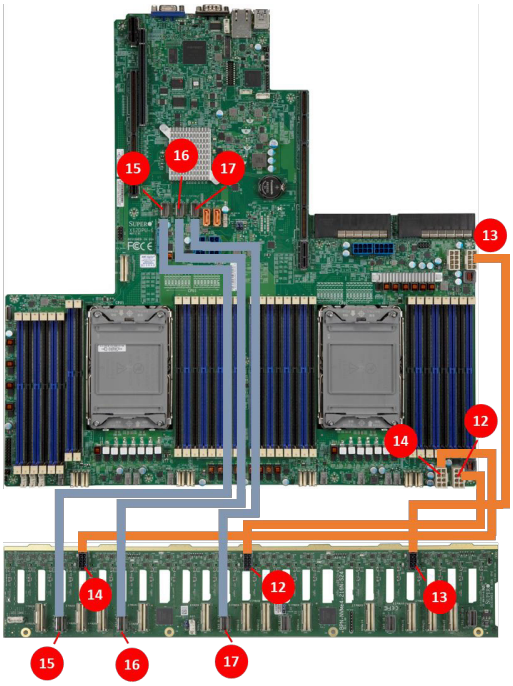

SAS/SATA Cables

Power Cables

220U-TNR --> **3816/3916** cable connection

	MB/RSC side			BPN side			
Cable #	Connector	Type	Port	Connector	Type	Port	Length
18	SlimSAS x8 (Fold left)	STR	(3816/3916) CN0	2x SlimSAS x4	STR	SAS 0-3, SAS 4-7	96
19	SlimSAS x8 (Fold left)	STR	(3816/3916) CN1	2x SlimSAS x4	STR	SAS 8-11, SAS 12-15	76
20	SlimSAS x8	STR	(3816/3916) CN0	2x SlimSAS x4	STR	SAS 0-3, SAS 4-7	64
20	SlimSAS x8	STR	(3816/3916) CN1	2x SlimSAS x4	STR	SAS 8-11, SAS 12-15	64

On slot #1

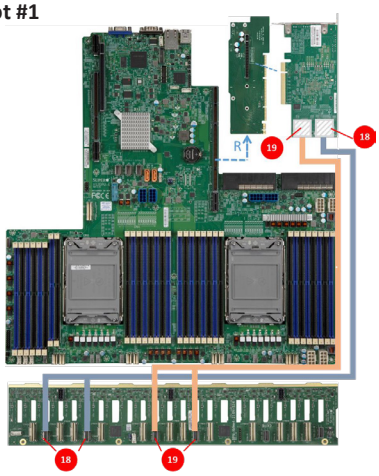

On slot #2

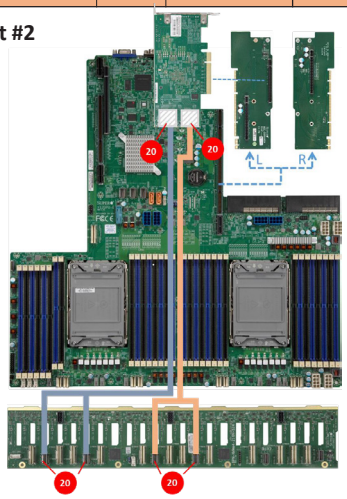

HBA Cable (Golden finger side)

HBA Cable

220U-TNR --> **3816** cable connection

	MB/RSC side			BPN side			
Cable #	Connector	Type	Port	Connector	Type	Port	Length
20	SlimSAS x8	STR	(3816/3916) CN0	2x SlimSAS x4	STR	SAS 0-3, SAS 4-7	64
20	SlimSAS x8	STR	(3816/3916) CN1	2x SlimSAS x4	STR	SAS 8-11, SAS 12-15	64

On slot #3

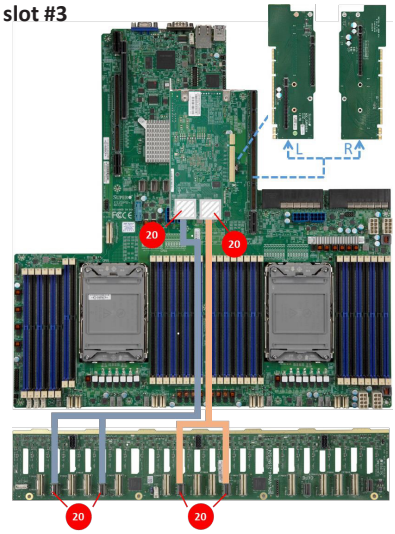

On slot #4

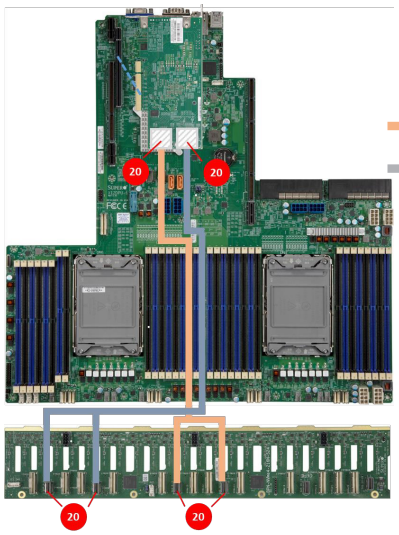

HBA Cable
(Golden finger side)
HBA Cable

220U-TNR --> **3916** cable connection

	MB/RSC side			BPN side			
Cable #	Connector	Type	Port	Connector	Type	Port	Length
19	SlimSAS x8 (Fold left)	STR	(3816/3916) CN0	2x SlimSAS x4	STR	SAS 0-3, SAS 4-7	76
20	SlimSAS x8	STR	(3816/3916) CN0	2x SlimSAS x4	STR	SAS 0-3, SAS 4-7	64
20	SlimSAS x8	STR	(3816/3916) CN1	2x SlimSAS x4	STR	SAS 8-11, SAS 12-15	64

On slot #3

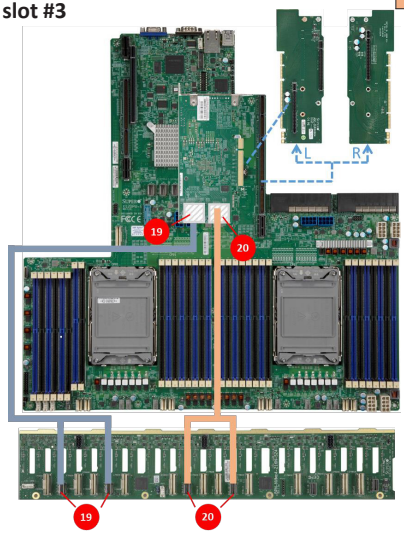

On slot #4

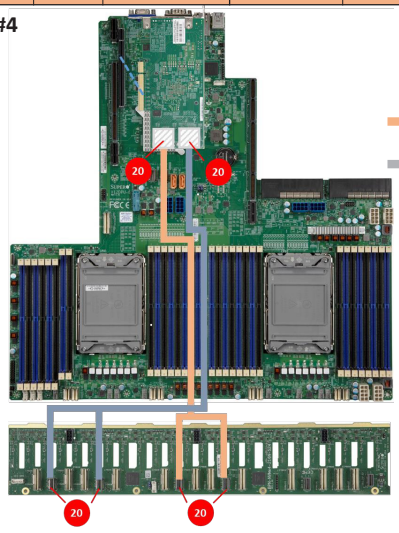

HBA Cable
(Golden finger side)
HBA Cable

220U-TNR --> **3816/3916** cable connection

	MB/RSC side			BPN side			
Cable #	Connector	Type	Port	Connector	Type	Port	Length
20	SlimSAS x8	STR	(3816/3916) CN0	2x SlimSAS x4	STR	SAS 0-3, SAS 4-7	64
20	SlimSAS x8	STR	(3816/3916) CN1	2x SlimSAS x4	STR	SAS 8-11, SAS 12-15	64

On slot #5, #6, #7, #8

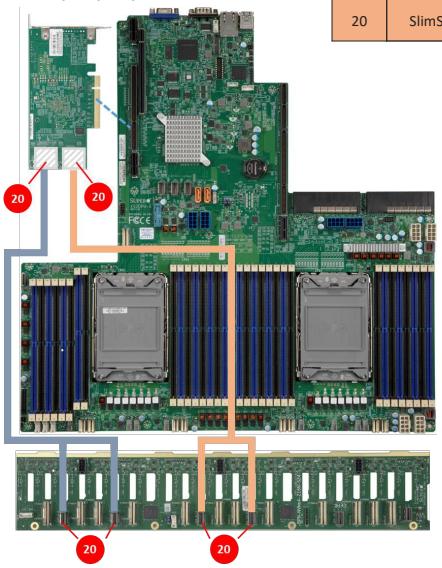

HBA Cable
(Golden finger side)
HBA Cable

220U-TNR --> **3808/3908** cable connection

	MB/RSC side			BPN side			
Cable #	Connector	Type	Port	Connector	Type	Port	Length
18	SlimSAS x8 (Fold left)	STR	(3808/3908) CN0	2x SlimSAS x4	STR	SAS 0-3, SAS 4-7	96
20	SlimSAS x8	STR	(3808/3908) CN0	2x SlimSAS x4	STR	SAS 0-3, SAS 4-7	64

On slot #1

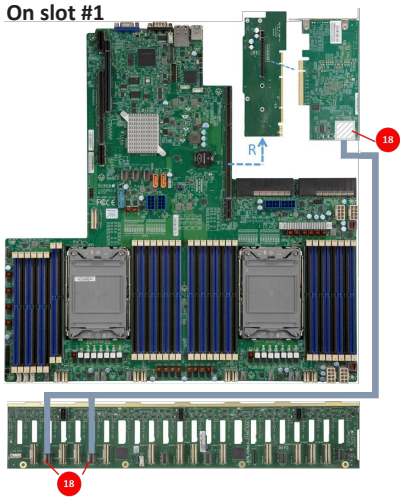

On slot #2

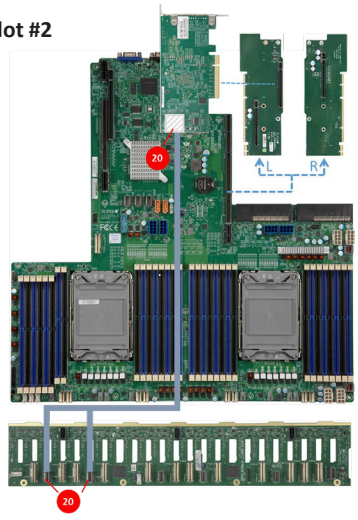

HBA Cable
(Golden finger side)
HBA Cable

220U-TNR --> **3808** cable connection

	MB/RSC side			BPN side			
Cable #	Connector	Type	Port	Connector	Type	Port	Length
20	SlimSAS x8	STR	3808 CN0	2x SlimSAS x4	STR	SAS 0-3, SAS 4-7	64

On slot #3

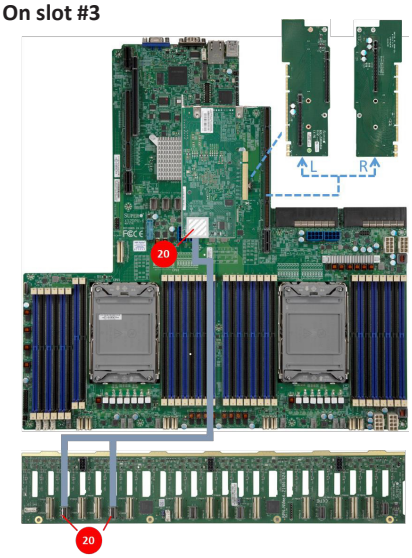

On slot #4

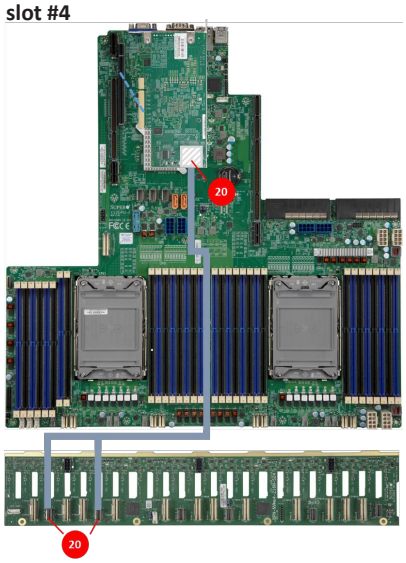

HBA Cable
(Golden finger side)
HBA Cable

220U-TNR --> **3908** cable connection

	MB/RSC side			BPN side			
Cable #	Connector	Type	Port	Connector	Type	Port	Length
19	SlimSAS x8 (Fold left)	STR	3908 CN0	2x SlimSAS x4	STR	SAS 0-3, SAS 4-7	76
20	SlimSAS x8	STR	3908 CN0	2x SlimSAS x4	STR	SAS 0-3, SAS 4-7	64

On slot #3

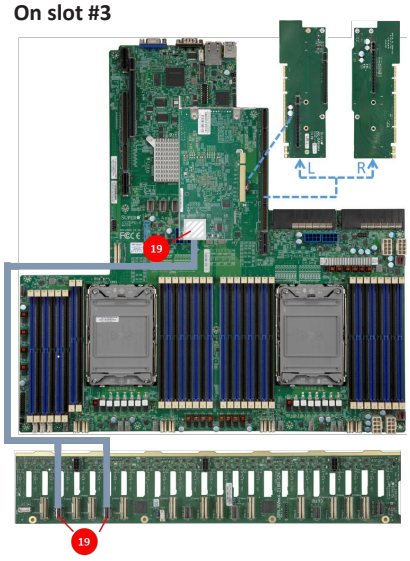

On slot #4

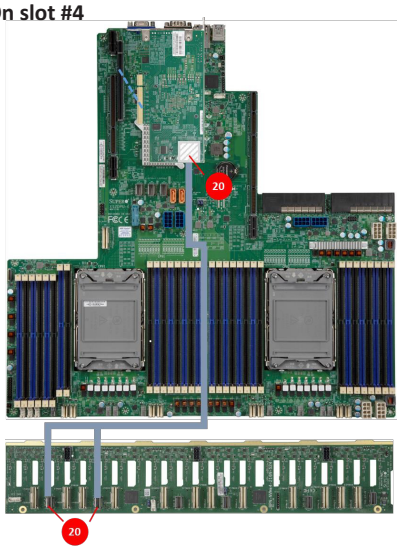

HBA Cable
(Golden finger side)
HBA Cable

220U-TNR --> **3808/3908** cable connection

	MB/RSC side			BPN side			
Cable #	Connector	Type	Port	Connector	Type	Port	Length
20	SlimSAS x8	STR	(3808/3908) CN0	2x SlimSAS x4	STR	SAS 0-3, SAS 4-7	64

On slot #5, #6, #7, #8

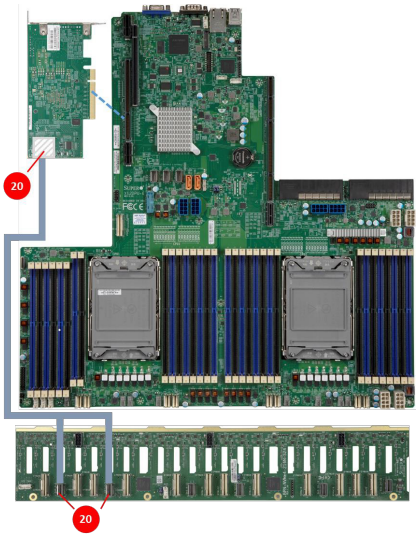

HBA Cable
(Golden finger side)
HBA Cable

220U-TNR --> **3008** cable connection

	MB/RSC side			BPN side			
Cable #	Connector	Type	Port	Connector	Type	Port	Part Number
21	MiniSAS HD	STR	3108/3008 CN0 or CN1	SlimSAS x4	STR	CN1 or CN2	CBL-SAST-1285-100
22	MiniSAS HD Dual	Left Exit	3108/3008 CN0&CN1	2x SlimSAS x4	STR	CN1 CN2	CBL-SAST-1260-100 *
*CBL-SAST-1260-100 P1 connect JSM2, P2 connect JSM1							

On slot #1,2,4,5,6,7,8

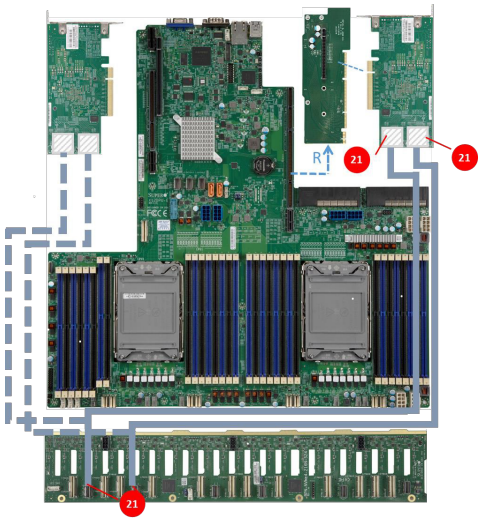

On slot #3

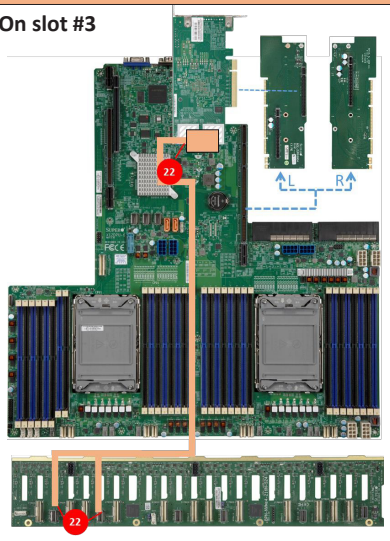

HBA Cable
(Golden finger side)
HBA Cable

220U-TNR --> **3108** cable connection

	MB/RSC side			BPN side			
Cable #	Connector	Type	Port	Connector	Type	Port	Part Number
21	MiniSAS HD	STR	3108/3008 CN0 or CN1	SlimSAS x4	STR	CN1 or CN2	CBL-SAST-1285-100
22	MiniSAS HD Dual	Left Exit	3108/3008 CN0&CN1	2x SlimSAS x4	STR	CN1 CN2	CBL-SAST-1260-100

On slot #1,2,4,5,6,7,8

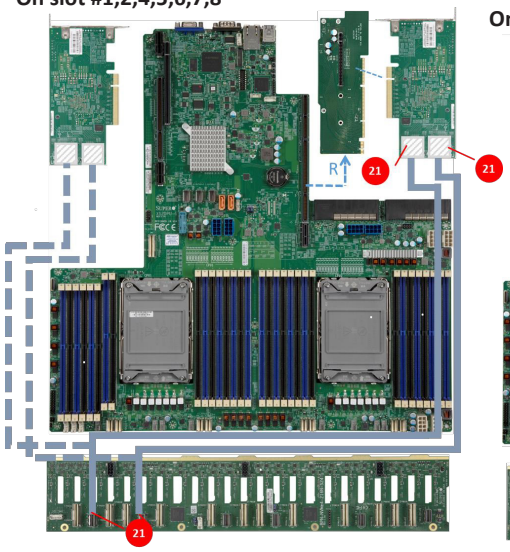

On slot #3

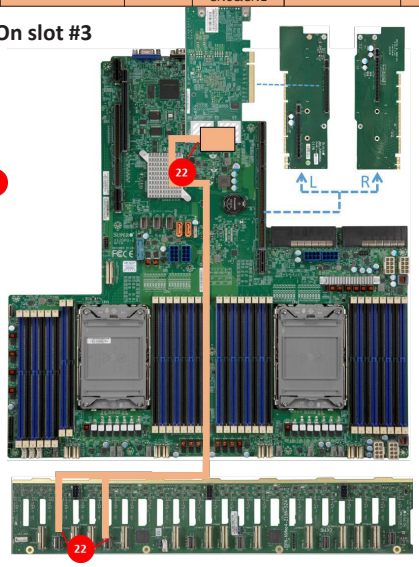

HBA Cable (Golden finger side)

HBA Cable

Part Numbers

	MB/RSC side			BPN side				
Cable #	Connector	Type	Port	Connector	Type	Port	Length	PN
12	2x4 GPU	STR	JPW2	2x4 GPU	STR	JPWR1	55	CBL-PWEX-0925
13	2x4 GPU	STR	JPW1	2x4 GPU	STR	JPWR2	24	CBL-PWEX-0924
14	2x4 GPU	STR	JPW3	2x4 GPU	STR	JPWR3	55	CBL-PWEX-0925
15	SlimSAS x4	STR	S-SATA 0-3	SlimSAS x4	STR	SAS 0-3	70	CBL-SAST-1270F-100
16	SlimSAS x4	STR	I-SATA 0-3	SlimSAS x4	STR	SAS 4-7	50	CBL-SAST-1250F-100
17	SlimSAS x4	STR	I-SATA 4-7	SlimSAS x4	STR	SAS 8-11	50	CBL-SAST-1250F-100
18	SlimSAS x8 (Fold left)	STR	(3816/3916) CN0	2x SlimSAS x4	STR	SAS 0-3, SAS 4-7	18	CBL-SAST-1296F-100
19	SlimSAS x8 (Fold left)	STR	(3816/3916) CN0/CN1	2x SlimSAS x4	STR	SAS 8-11, SAS 12-15	19	**CBL-SAST-1276F-100**
20	SlimSAS x8	STR	(3816/3916) CN0/CN1	2x SlimSAS x4	STR	SAS 0-3, SAS 4-7, SAS 8-11, SAS 12-15	20	CBL-SAST-1264F-100

Chapter 4

Motherboard Connections

This section describes the connections on the motherboard and provides pinout definitions. Note that depending on how the system is configured, not all connections are required. The LEDs on the motherboard are also described here. A motherboard layout indicating component locations may be found in Chapter 1. More detail can be found in the Motherboard Manual

Please review the Safety Precautions in Appendix A before installing or removing components.

4.1 Power Connections

Two power connectors supply the motherboard and several more supply onboard devices.

Main Power Connectors

Two proprietary main power headers are located at PSU1 and PSU2. Connect appropriate power supply units to these two headers to provide adequate power to your system.

Backplane Power Connectors & GPU Power Connectors

In addition to the main power headers, eight 8-pin DC power connectors are also located on the motherboard. Four GPU Power Connectors, JGPW1–4, are used for GPU devices, while JPW1–4 are used for four backplane devices. Use the appropriate power cable to make a connection between these connectors and the storage disk backplane and high-powered GPU cards (if installed).

To provide adequate power supply to your entire system, connect both main power supply units (PSU1/PSU2) and all 8-pin PWR connectors (JPW1–4 and JGPW1–4) on the motherboard to the power supplies. Failure to do so may void the manufacturer warranty on your power supply and motherboard.

GPU 8-pin Power JGPW1–4 Pin Definitions

Pin#	Definition
1 - 4	Ground
5 - 8	+12 V

Backplane 8-pin Power JPW1–4 Pin Definitions

Pin#	Definition
1 - 4	Ground
5 - 6	+12V
7 - 8	+5V

4.2 Headers and Connectors

Fan Headers

There are eight fan headers on the motherboard. These are 4-pin fan headers, although pins 1-3 are backward compatible with traditional 3-pin fans. Four-pin fans allow fan speeds to be controlled by Thermal Management in the BMC. When using the Thermal Management setting, use all 3-pin fans or all 4-pin fans.

Fan Header Pin Definitions

Pin#	Definition
1	Ground (Black)
2	+12V (Red)
3	Tachometer
4	PWM Control

SGPIO Header

A Serial General Purpose Input/Output header (T-SGPIO3) is used to communicate with the enclosure management chip on the backplane.

SGPIO Header Pin Definitions

Pin#	Definition	Pin#	Definition
1	NC	2	NC
3	Ground	4	DATA Out
5	Load	6	Ground
7	Clock	8	NC

NC = No Connection

Disk-On-Module Power Connector

Two power connectors for SATA DOM (Disk-On-Module) devices are located at JSD1 and JSD2. Connect appropriate cables here to provide power support for your Serial Link DOM devices.

DOM Power Pin Definitions

Pin#	Definition
1	5V
2	Ground
3	Ground

TPM Header

The JTPM1 header is used to connect a Trusted Platform Module (TPM)/Port 80, which is available from Supermicro. A TPM/Port 80 connector is a security device that supports encryption and authentication in hard drives. It allows the motherboard to deny access if the TPM associated with the storage drive is not installed in the system. For more information on the TPM: http://www.supermicro.com/manuals/other/TPM.pdf.

Trusted Platform Module/Port 80 Header Pin Definitions

Pin#	Definition	Pin#	Definition
1	P3V3	2	SPI_TPM_CS_N
3	PCI-E_RESET_N#	4	SPI_PCH_MISO
5	SPI_PCH_CLK#	6	Ground
7	SPI_PCH_MOSI	8	N/A
9	JTPM1_P3V3A	10	IRQ_TPM_SPIN_N

NVMe SMBus Headers

NVMe SMBus (I^2C) headers (JNVI^{2}C3/4), used for PCI-E SMBus clock and data connections, provide hot-plug support through a dedicated SMBus interface. This feature is only available for a Supermicro complete system with a proprietary NVMe add-on card and cable installed.

NVMe SMBus Header Pin Definitions

Pin#	Definition
1	Data
2	Ground
3	Clock
4	VCCIO

Internal Speaker/Buzzer

The Internal Speaker/Buzzer (SP1) is used to provide audible indications for various beep codes.

Internal Buzzer Pin Definitions

Pin#	Definition	
1	Pos (+)	Beep In
2	Neg (-)	Alarm Speaker

NCSI Connector

Use the Network Controller SideBand Interface (NCSI) connector, JNSCI, to connect a Network Interface Controller (NIC) to the motherboard.

RAID Key Header

An Intel VROC RAID Key header is located at JRK1. It supports VMD used in creating optional advanced NVMe RAID configurations.

RAID Key Header Pin Definitions	
Pin#	**Definition**
1	Ground
2	RAID_KEY_PU
3	Ground
4	PCH_RAID_KEY

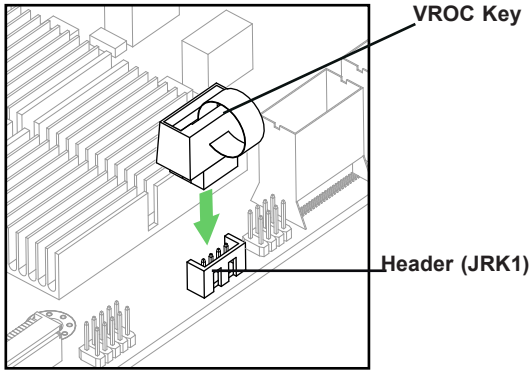

Note: This drawing is for illustration only. Your motherboard may look different.

Chassis Intrusion

A Chassis Intrusion header is located at JL1 on the motherboard. Attach the appropriate cable from the chassis to the header to inform you when the chassis is opened.

Chassis Intrusion Pin Definitions	
Pins	**Definition**
1	Intrusion Input
2	Ground

4-pin BMC External I²C Header

A System Management Bus header for BMC is located at JIPMB1. Connect a cable to this header to use the IPMB I²C connection on your system.

External I²C Header Pin Definitions	
Pin#	**Definition**
1	Data
2	Ground
3	Clock
4	No Connection

Control Panel

JF1 contains header pins for various control panel connections. See the figure below for the pin locations and definitions of the control panel buttons and LED indicators.

All JF1 wires have been bundled into a single cable to simplify this connection. Make sure the red wire plugs into pin 1 as marked on the motherboard. The other end connects to the control panel PCB board.

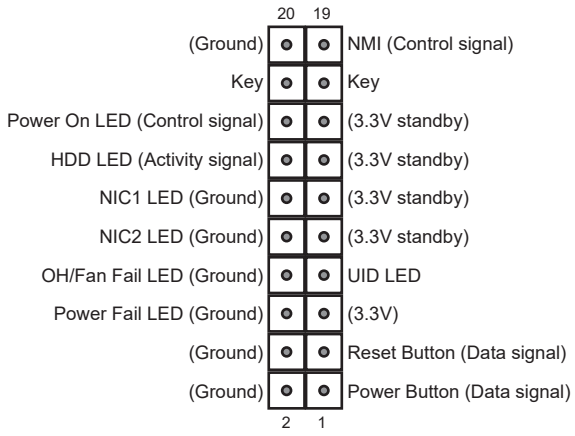

Figure 4-1. JF1 Control Panel Pins

Power Button

The Power Button connection is located on pins 1 and 2 of JF1. Momentarily contacting both pins will power on/off the system. This button can also be configured to function as a suspend button with a setting in the BIOS. To turn off the power when the system is in suspend mode, press the button for 4 seconds or longer.

Power Button Pin Definitions (JF1)	
Pin#	**Definition**
1	Signal
2	Ground

Reset Button

The Reset Button connection is located on pins 3 and 4 of JF1. Attach it to a hardware reset switch on the computer case.

Reset Button Pin Definitions (JF1)	
Pin#	**Definition**
3	Reset
4	Ground

Power Fail LED

The Power Fail LED connection is located on pins 5 and 6 of JF1.

Power Fail LED Pin Definitions (JF1)	
Pin#	**Definition**
5	3.3V
6	PWR Supply Fail

Overheat (OH)/Fan Fail

Connect an LED cable to pins 7 and 8 of JF1 to use the Overheat/Fan Fail LED connections. The LED on pin 8 provides warnings of overheat or fan failure.

OH/Fan Fail Indicator Status	
Status	**Definition**
Off	Normal
On	Overheat
Flashing	Fan Fail

OH/Fan Fail LED Pin Definitions (JF1)	
Pin#	**Definition**
7	Blue LED
8	OH/Fan Fail LED

NIC1/NIC2 (LAN1/LAN2)

The NIC (Network Interface Controller) LED connection for LAN port 1 is located on pins 11 and 12 of JF1, and the LED connection for LAN port 2 is on pins 9 and 10. Attach the NIC LED cables here to display network activity.

LAN1/LAN2 LED Pin Definitions (JF1)	
Pin#	**Definition**
9	NIC2 Activity LED
10	NIC2 Link LED
11	NIC1 Activity LED
12	NIC1 Link LED

HDD LED/UID Switch

The HDD LED/UID Switch connection is located on pins 13 and 14 of JF1. Attach a cable to Pin 14 to show hard drive activity status. Attach a cable to pin 13 to use UID switch. Refer to the table below for pin definitions.

HDD LED Pin Definitions (JF1)	
Pin#	**Definition**
13	3.3V Standby/UID Switch
14	HDD Active

Power LED

The Power LED connection is located on pins 15 and 16 of JF1.

Power LED Pin Definitions (JF1)	
Pin#	**Definition**
15	3.3V
16	Power LED

NMI Button

The non-maskable interrupt button header is located on pins 19 and 20 of JF1.

NMI Button Pin Definitions (JF1)	
Pin#	**Definition**
19	Control
20	Ground

4.3 Input/Output Ports

See the figure below for the locations and descriptions of the I/O ports on the rear of the motherboard.

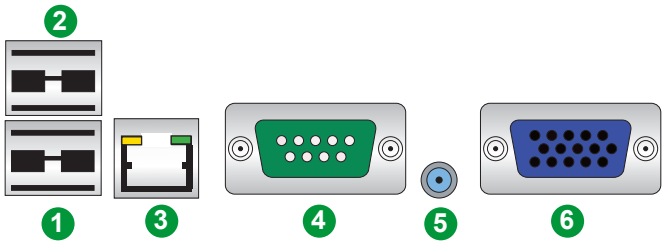

Figure 4-2. Rear I/O Ports

Rear I/O Ports			
#	Description	#	Description
1	USB0 (3.0)	4	COM1
2	USB1 (3.0)	5	UID Switch
3	BMC Dedicated LAN	6	VGA

LAN Ports

There is a dedicated BMC LAN port on the I/O back panel.

There can also be, two, four, or zero network LAN ports on the chassis rear provided by the Ultra riser card, depending on the option you purchased.

Unit Identifier Switch/UID LED Indicator

A Unit Identifier (UID) switch and a UID LED indicator are located on the rear of the system. When you press the UID switch, both front and rear UID LED indicators are toggled on or off. The UID indicators provide easy identification of a system in a rack.

Note: the UID can also be triggered using the BMC.

4.4 Jumpers

Explanation of Jumpers

To modify the operation of the motherboard, jumpers are used to choose between optional settings. Jumpers create shorts between two pins to change the function associated with it. Pin 1 is identified with a square solder pad on the printed circuit board. See the motherboard layout page for jumper locations.

Note: On a two-pin jumper, "Closed" means the jumper is on both pins and "Open" indicates the jumper is either on only one pin or has been completely removed.

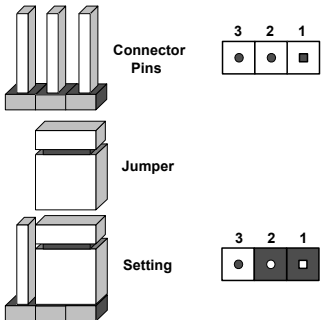

CMOS Clear

JBT1 is used to clear CMOS. See Section 7.7 for details.

UID and System Reset Button Select Jumper

Jumper JUID is used to configure the function of the Control Panel Reset or UID LED button (Pin 2 of JFP1). To set the button to toggle the UID LEDs (in a chassis that supports front UID), close Pins 1 and 2 of jumper JUID. To set the button to reset the system, close Pins 3 and 4 of jumper JUID.

Front UID Switch/Reset Button Select Jumper (JUID) Jumper Settings	
State	**Description**
Close Pin 1 and Pin 2 of JUID	Button UID support **(Default)**
Close Pin 3 and Pin 4 of JUID	Button system reset support

4.5 LED Indicators

Network LAN LEDs

The Ethernet ports each have two LEDs. One LED indicates activity when flashing green. The other may be green, amber or off to indicate the speed of the connection. Speeds are noted in Chapter 1.

Dedicated BMC LAN LEDs

A dedicated BMC LAN port is also included on the motherboard. The amber LED on the right of the BMC LAN port indicates activity, while the LED color on the left indicates the speed of the connection.

BMC Link LED	
Color	**Definition**
Off	No Connection
Green	100 Mb/s
Amber	1 Gb/s

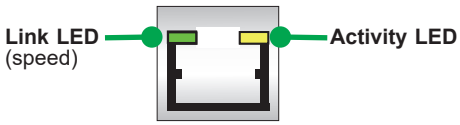

Unit ID LED

A rear unit identifier (UID) indicator at LED1 is located near the UID switch on the I/O back panel. It provides easy identification of a unit that may need service.

Onboard Power LED

The Onboard Power LED is LE2. When this LED is on, the system power is on.

BMC Heartbeat LED

LEDM1 is the BMC heartbeat LED. When the LED is blinking green, BMC is functioning normally.

4.6 Storage Ports

I-SATA 3.0 and S-SATA 3.0 Ports

The X12DPU-6 has eight I-SATA 3.0 ports (I-SATA 0-3, I-SATA 4-7) and six S-SATA (S-SATA 0-3, S-SATA 4, S-SATA 5) on the motherboard. These SATA ports are supported by the Intel PCH C621 chipset. S-SATA 4/S-SATA 5 can be used with Supermicro SuperDOMs which are orange SATA DOM connectors with power pins built in, and do not require external power cables. Supermicro SuperDOMs are compatible with regular SATA HDDs or SATA DOMs that need external power cables.

NVMe Connectors

Five NVMe connectors (P1_NVMe1/3/4/5/6), supported by Processor #1, provide five NVMe connections. In addition, four NVMe connectors (P2_NVMe7/8/9/10), supported by Processor #2, also provide four NVMe connections on the motherboard. Use these NVMe connections to support high-speed PCI-E storage devices.

Note: When installing an NVMe device on a motherboard, please be sure to connect the first NVMe port (P1_NVMe1) first for your system to work properly.

Chapter 5

Software

After the hardware has been installed, you can install the Operating System (OS), configure RAID settings and install the drivers.

5.1 Microsoft Windows OS Installation

If you will be using RAID, you must configure RAID settings before installing the Windows OS and the RAID driver. Refer to the RAID Configuration User Guides posted on our website at www.supermicro.com/support/manuals.

Installing the OS

1. Create a method to access the MS Windows installation ISO file. That might be a DVD, perhaps using an external USB/SATA DVD drive, or a USB flash drive, or the BMC KVM console.

2. Retrieve the proper RST/RSTe driver. Go to the Supermicro web page for your motherboard and click on "Download the Latest Drivers and Utilities", select the proper driver, and copy it to a USB flash drive.

3. Boot from a bootable device with Windows OS installation. You can see a bootable device list by pressing **F11** during the system startup.

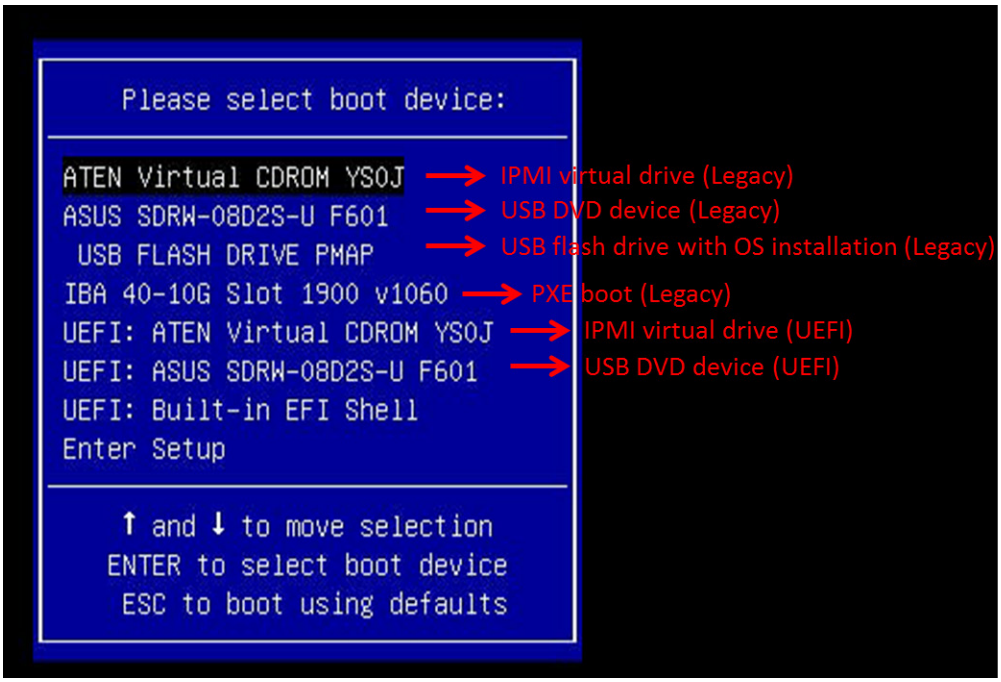

Figure 5-1. Select Boot Device

4. During Windows Setup, continue to the dialog where you select the drives on which to install Windows. If the disk you want to use is not listed, click on “Load driver” link at the bottom left corner.

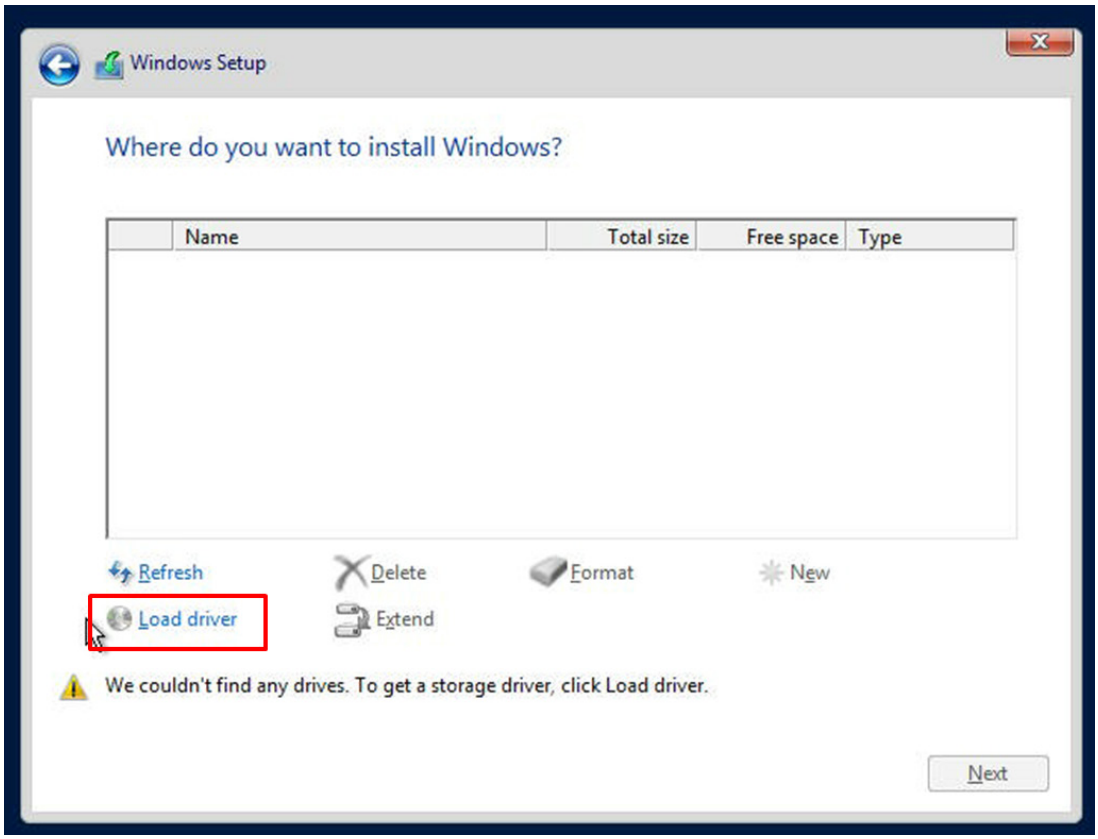

Figure 5-2. Load Driver Link

To load the driver, browse the USB flash drive for the proper driver files.

- For RAID, choose the SATA/sSATA RAID driver indicated then choose the storage drive on which you want to install it.
- For non-RAID, choose the SATA/sSATA AHCI driver indicated then choose the storage drive on which you want to install it.

5. Once all devices are specified, continue with the installation.
6. After the Windows OS installation has completed, the system will automatically reboot multiple times.

5.2 Driver Installation

The Supermicro website contains drivers and utilities for your system at https://www.supermicro.com/wdl/driver. Some of these must be installed, such as the chipset driver.

After accessing the website, go into the CDR_Images (in the parent directory of the above link) and locate the ISO file for your motherboard. Download this file to to a USB flash drive or a DVD. (You may also use a utility to extract the ISO file if preferred.)

Another option is to go to the Supermicro website at http://www.supermicro.com/products/. Find the product page for your motherboard, and "Download the Latest Drivers and Utilities".

Insert the flash drive or disk and the screenshot shown below should appear.

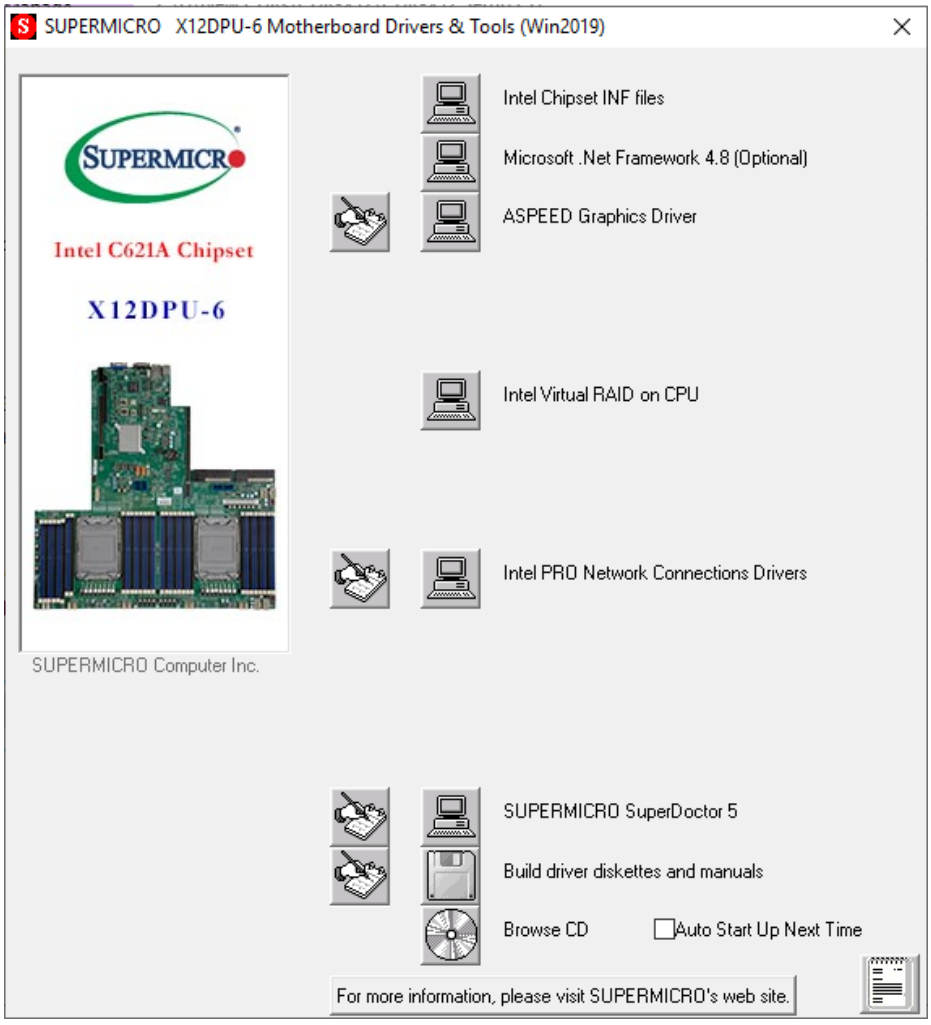

Figure 5-3. Driver & Tool Installation Screen

Note: Click the icons showing a hand writing on paper to view the readme files for each item. Click the computer icons to the right of these items to install each item (from top to the bottom) one at a time. **After installing each item, you must re-boot the system before moving on to the next item on the list.** The bottom icon with a CD on it allows you to view the entire contents.

5.3 SuperDoctor® 5

The Supermicro SuperDoctor 5 is a program that functions in a command-line or web-based interface for Windows and Linux operating systems. The program monitors such system health information as CPU temperature, system voltages, system power consumption, fan speed, and provides alerts via email or Simple Network Management Protocol (SNMP).

SuperDoctor 5 comes in local and remote management versions and can be used with Nagios to maximize your system monitoring needs. With SuperDoctor 5 Management Server (SSM Server), you can remotely control power on/off and reset chassis intrusion for multiple systems with SuperDoctor 5 or the BMC. SuperDoctor 5 Management Server monitors HTTP, FTP, and SMTP services to optimize the efficiency of your operation.

SuperDoctor® Manual and Resources

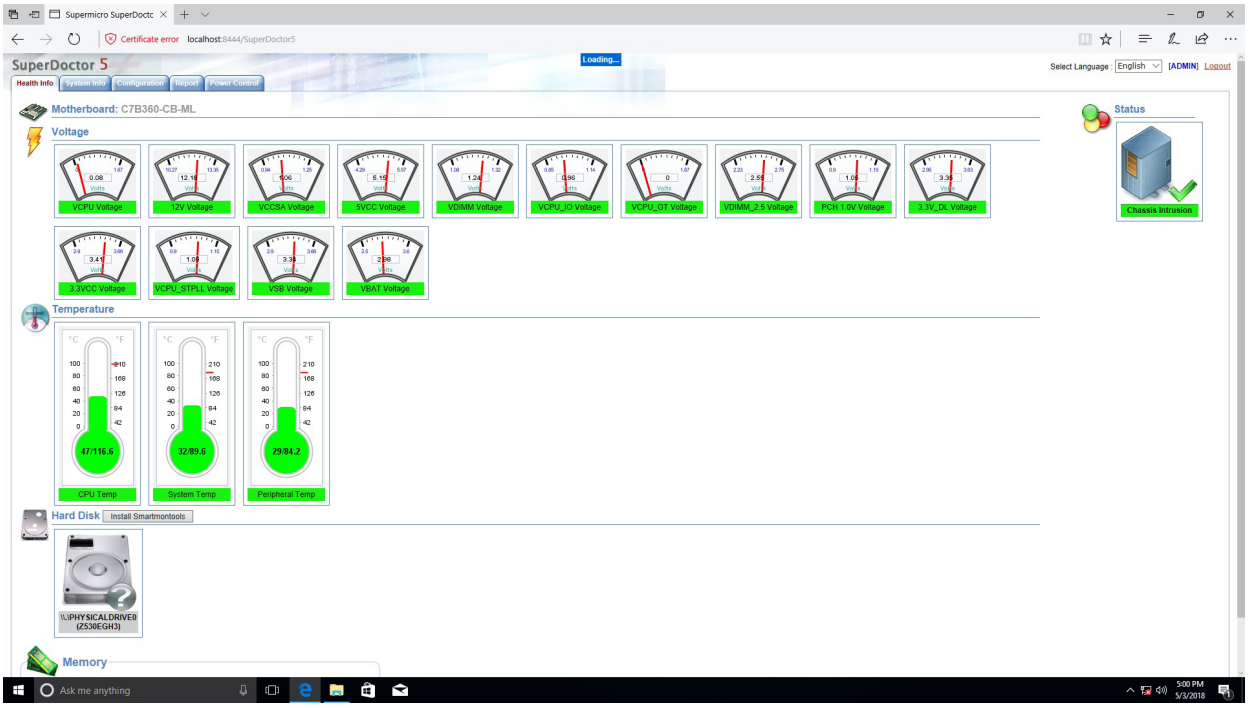

Figure 5-4. SuperDoctor 5 Interface Display Screen (Health Information)

5.4 BMC

The motherboard provides remote access, monitoring and management through the baseboard management controller (BMC) and other management controllers distributed among different system modules. There are several BIOS settings that are related to BMC. For general documentation and information on BMC, visit our website at:

www.supermicro.com/en/solutions/management-software/bmc-resources

BMC ADMIN User Password

For security, each system is assigned a unique default BMC password for the ADMIN user. This can be found on a sticker on the chassis and a sticker on the motherboard. The sticker also displays the BMC MAC address.



Figure 5-5. BMC Password Label

The sticker can be found on the pull-out service tag at the front of the chassis. See Chapter 1 for the location.

Chapter 6

Optional Components

This chapter describes alternate configurations and optional system components.

Optional Parts
Storage drive options
Power options
Cable Management Arm
TPM security module
Intel VROC RAID Key

6.1 Storage Protocols Supported

The storage drive bays can support SATA, SAS, and NVMe in any combination. To enable SAS and NVMe, additional hardware is required. Once the supporting hardware is installed for a selection of bays, drives of any storage protocol type can be inserted.

SATA – The default configuration supports up to twelve SATA drives. (Cables only)

SAS – An add-on controller card and cables can support up to twenty-four SAS (and SATA) drives.

NVMe – System supports up to twenty-two NVMe drives. The motherboard supports up to ten NVMe drives. Support for more than ten requires cables and retimer cards. Ten or fewer NVMe drives require a cable kit only.

6.2 Power Supply Modules

Power Supply Module Options		
Watts	**Part Number**	**80Plus Level**
1600	PWS-1K62A-1R (default)	Titanium
2000	PWS-2K08A-1R	Titanium
1300 DC	PWS-1K30D-1R	Not applicable

6.3 Cable Management Arm

The system supports a cable management arm (CMA), which keeps the rear cables organized and clear of the rail mechanisms when the system is extended out the front of the rack for maintenance.

The CMA attaches to the rack mounting rails by means of four connectors. They are labeled on the connectors 1, 2, 3, and 4.

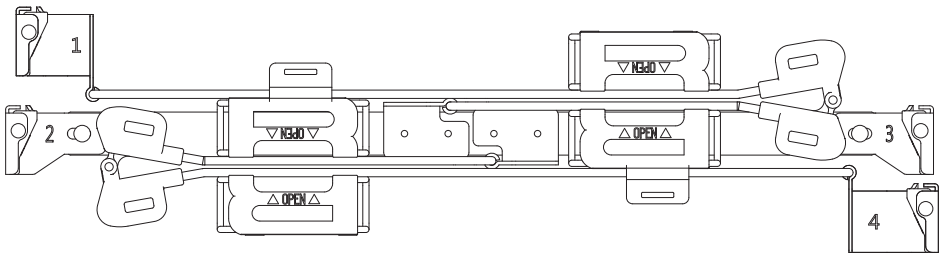

Figure 6-1. Cable Management Arm

Installing the Cable Management Arm

1. Slide CMA connector #1 forward onto the two posts on the rear of the right *inner* rail (right side when viewed from the front). It snaps into place.
2. Slide CMA connector #2 forward onto the two posts on the rear of the right *middle* rail. It snaps into place.

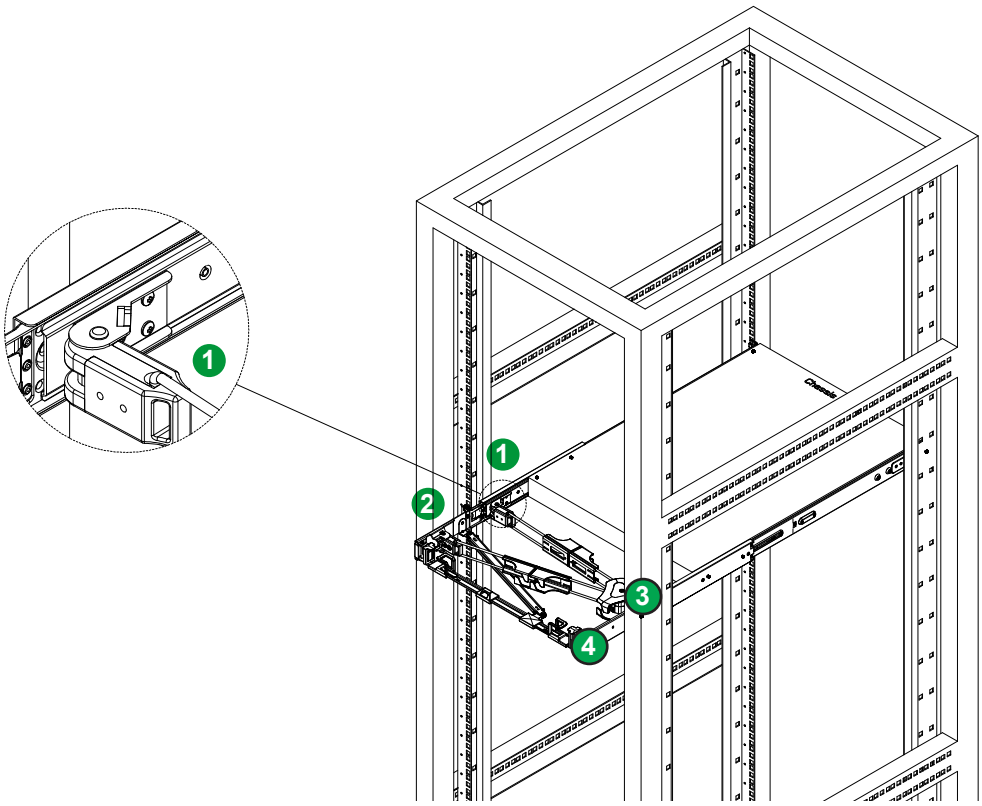

Figure 6-2. Installing the Connectors

3. Slide CMA connector #3 forward onto the two posts on the rear of the left middle rail. It snaps into place.
4. For CMA connector #4, align the metal tabs with the slots on the rear of the left outer rail and push it forward. It snaps into place.
5. Route the cables through the holding brackets, leaving enough slack.

Removing the Cable Management Arm

1. Remove cables from the CMA,
2. For CMA connector #4, pull the metal release tab toward the center of the rack and slide the connector toward the rear to release it.
3. For CMA connectors #3, #2, and #1, depress the front edge of the yellow plastic rocker lock, and slide the connector toward the rear to release it.

6.4 TPM Security Module

SPI capable TPM 2.0 (or 1.2) with Infineon 9670 controller, vertical form factor

The JTPM1 header is used to connect a Trusted Platform Module (TPM). A TPM is a security device that supports encryption and authentication in hard drives. It enables the motherboard to deny access if the TPM associated with the hard drive is not installed in the system.

Details and installation procedures are at:

http://www.supermicro.com/manuals/other/TPM.pdf.

- AOM-TPM-9670V
- AOM-TPM-9671V

6.5 Intel Virtual RAID on CPU (VROC)

Intel® Virtual RAID on CPU (Intel VROC) is an enterprise RAID solution for NVMe SSDs directly attached to Intel Xeon Scalable processors. Intel Volume Management Device (VMD) is an integrated controller inside the CPU PCIe root complex.

- A single processor supports up to 12 NVMe SSDs and up to 6 RAID arrays.
- A dual processor system supports up to 24 NVMe SSDs and 12 RAID arrays.

Strip sizes are 4K, 8K, 16K, 32K, 64K, 128K.

Requirements and Restrictions

- **Intel VROC is only available when the system is configured for UEFI boot mode.**
- To enable the **mdadm** command and support for RSTe, install the patch from
  - Linux: https://downloadcenter.intel.com/download/28158/Intel-Virtual-RAID-on-CPU-Intel-VROC-and-Intel-Rapid-Storage-Technology-enterprise-Intel-RSTe-Driver-for-Linux-
  - Windows: https://downloadcenter.intel.com/download/28108/Intel-Virtual-RAID-on-CPU-Intel-VROC-and-Intel-Rapid-Storage-Technology-enterprise-Intel-RSTe-Driver-for-Windows-
- To enable Intel VROC, a hardware key must be inserted on the motherboard, and the appropriate processor's Virtual Management Devices must be enabled in the BIOS setup.
- It is possible to enable Intel VROC without a hardware key installed, but only RAID0 will be enabled.
- Intel VROC is not compatible with secure boot. This feature must be disabled.
- When creating bootable OS RAID1 devices, you must have both devices on the same CPU, and a VMD on that CPU.
- Spanning drives when creating RAID devices is not recommended to due to performance issues, even though it is supported.

Supported SSDs and Operating Sytems

To see the latest support information: https://www.intel.com/content/www/us/en/support/articles/000030310/memory-and-storage/ssd-software.html

Additional Information

Additional information is available on the product page for the Supermicro add-on card and the linked manuals.

www.supermicro.com/products/accessories/addon/AOC-VROCxxxMOD.cfm

Hardware Key

The Intel VROC hardware key is a license key that detects the Intel VROC SKU and activates the function accordingly. The key must be plugged into the Supermicro motherboard (connector JRK1). The key options are:

Intel® VROC Keys			
VROC Package	**Description**	**Part Number**	**Intel MM Number**
Standard	RAID 0, 1, 10 Supports 3rd party SSDs	AOC-VROCSTNMOD	951605
Premium	RAID 0, 1, 5, 10 Supports 3rd party SSDs	AOC-VROCPREMOD	951606
Intel SSD only	RAID 0, 1, 5, 10 Supports Intel SSDs only	AOC-VROCINTMOD	956822

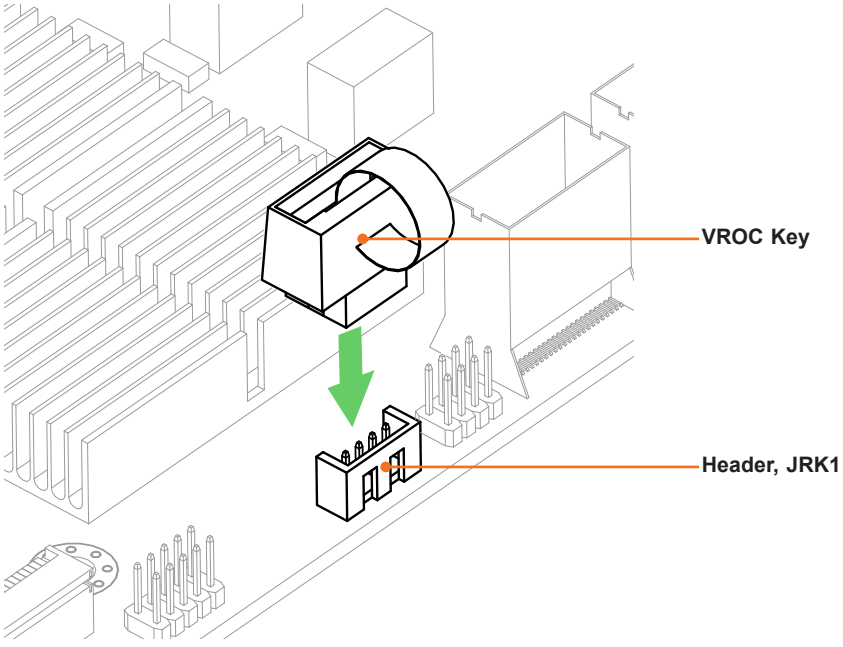

Figure 6-6. Intel VROC RAID Key and Motherboard Connector JRK1

Configuring Intel VMD

VMD must be enabled on PCIe ports which have NVMe drives attached to them in order for those drives to be added to a VROC RAID configuration. The default BIOS setting for the NVMe Mode Switch is **Auto** which automatically enables VMD on all installed NVMe drives.

NVMe Mode Switch :

- **Auto** Enables VMD for all NVMe ports if VROC Key is installed.
- **VMD** Enables VMD for all NVMe ports despite the lack of the VROC Key.
- **Manual** Allows the user to select specific NVMe ports on which to enable VMD.

The NVMe Mode Switch can be viewed or selected at **BIOS > Advanced > Chipset Configuration > North Bridge > IIO Configuration > Intel® VMD Technology**.

Note: Without a VROC Key, there is no RAID support with the **Auto** switch. Only RAID 0 is supported with the **VMD** and **Manual** switches.

Configuring VMD Manually

The steps for manually configuring VMD on specific NVMe ports in UEFI BIOS are shown below. Example screenshots may differ from your server.

1. Reboot the server and press [DEL] key to access the BIOS options.
2. Switch to **Advanced > Chipset Configuration > North Bridge > IIO Configuration > Intel® VMD Technology**.
3. Select **VMD Mode Switch**, then select **Manual**.

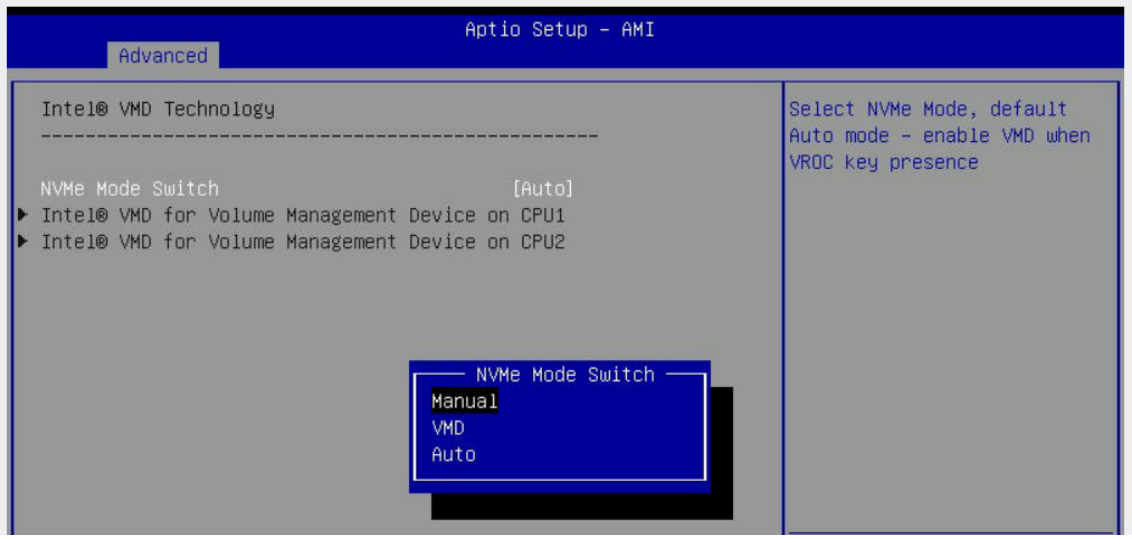

Figure 6-7. BIOS, Selecting VMD Mode

Caution: VMD must only be enabled on NVMe port resources. If VMD is enabled on other PCIe ports, the functionality of those ports will be impacted. See the table below.

This table identifies the NVMe Port Resources in the X12 Ultra Servers. Enable VMD on the NVMe drive's corresponding hardware stack according to the VMD BIOS Settings table.

Intel VMD BIOS Settings				
Model	**CPU1**		**CPU2**	
SYS-120U-TNR	VMD on IOU 0: VMD port 1A VMD port 1B	NVMe 0,1	VMD on IOU 0: AOC-URG4N4-xx NVME2 VMD AOC-URG4N4-xx NVME3 VMD	NVMe 6,7
	VMD on IOU 4: VMD port 5A VMD port 5B VMD port 5C VMD port 5D	NMVe 2,3,4,5	VMD on IOU 4: VMD port 5A VMD port 5B VMD port 5C VMD port 5D	NMVe 8,9,10,11
SYS-610U-TNR	VMD on IOU 4: VMD port 5A VMD port 5D	NVMe 0,1	VMD on IOU 4: VMD port 5A VMD port 5D	NVMe 2,3
SYS-620U-TNR	VMD on IOU 0: VMD port 1A VMD port 1B	NVMe 0,1	**Ultra Riser (No NIC):** VMD on IOU 0: VMD on AOC-2UR668G4 (Slot 1) **Ultra Riser (with NIC)** VMD on IOU 0: VMD on AOC-2UR68G4-xx (Slot 3)	NVMe 6,7 NVMe 6,7
	VMD on IOU 4: VMD port 5A VMD port 5B VMD port 5C VMD port 5D	NMVe 2,3,4,5	VMD on IOU 4: VMD port 5A VMD port 5B VMD port 5C VMD port 5D	NMVe 8,9,10,11
SYS-220U-TNR*	VMD on IOU 0: VMD port 1A VMD port 1B	NVMe 0,1	**Ultra Riser (No NIC):** VMD on IOU 0: VMD on AOC-2UR668G4 (Slot 1) **Ultra Riser (with NIC)** VMD on IOU 0: VMD on AOC-2UR68G4-xx (Slot 3) VMD on AOC-2UR68G4-xx (Slot 1)	NVMe 10,11,12,13 NVMe 10,11 NVMe 12,13
	VMD on IOU 1: VMD on RSC-WR-6 (Slot 1)	NVMe 2,3,4,5	VMD on IOU 1: VMD on AOC-2UR68G4-xx (Slot 2)	NVMe 14,15,16,17
	VMD on IOU 4: VMD port 5A VMD port 5B VMD port 5C VMD port 5D	NVMe 6,7,8,9	VMD on IOU 4: VMD port 5A VMD port 5B VMD port 5C VMD port 5D	NVMe 18,19,20,21
SYS-220U-MTNR	VMD on IOU 4: VMD port 5A VMD port 5B VMD port 5C VMD port 5D	NVMe 0,1,2,3	VMD on IOU 4: VMD port 5C VMD port 5D	NVMe 4,5

*SYS-220U-TNR NVMe drives are the physical drives 2-23.

4. Select “Intel VMD for Volume Management Device on” on CPU1 or CPU2 to enable VMD for devices under the respective CPU. .



Figure 6-8. Intel VMD for Volume Management Device on CPU1 and CPU2

5. Choose Enable for “Enable/Disable VMD” for IOU 0 to list the available devices under IOU 0.

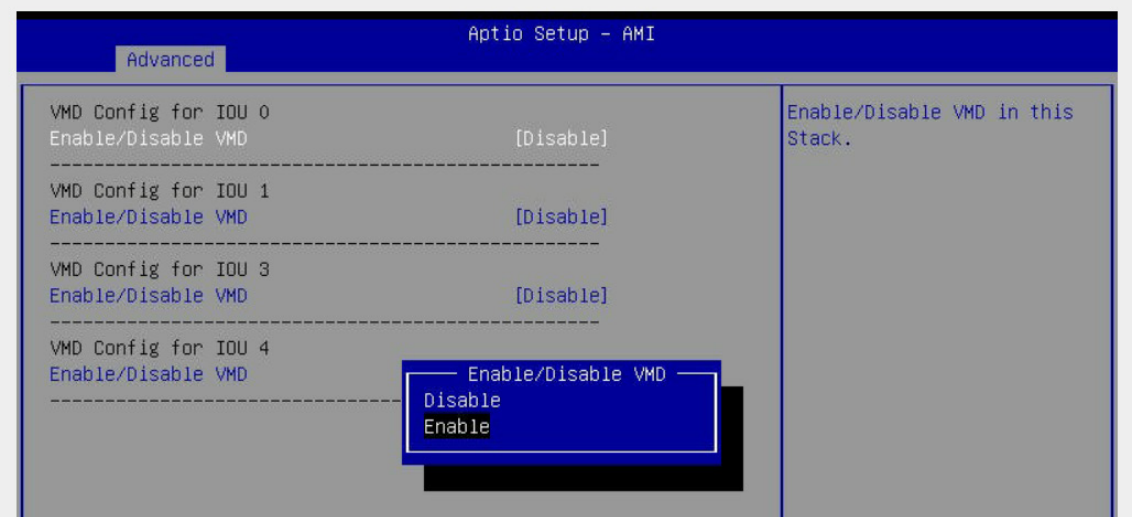

Figure 6-9. BIOS, Enabling VMD on devices under CPU2 (Example)

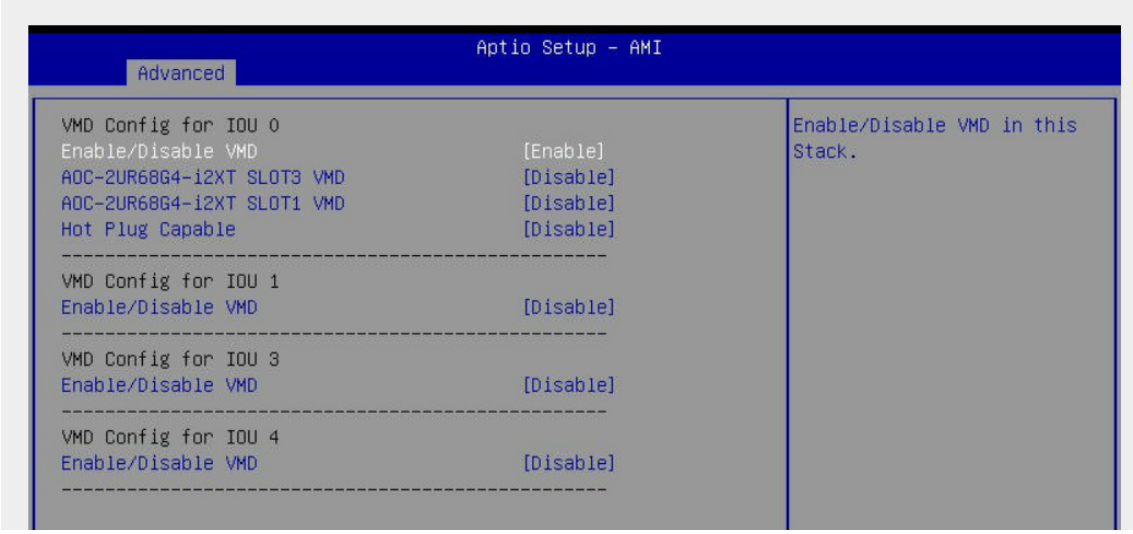

Figure 6-10. BIOS, Enabling VMD on CPU 2 (Example)

6. Enable the NVMe port resource according to table above for the NVMe drives that will be used in a RAID configuration.

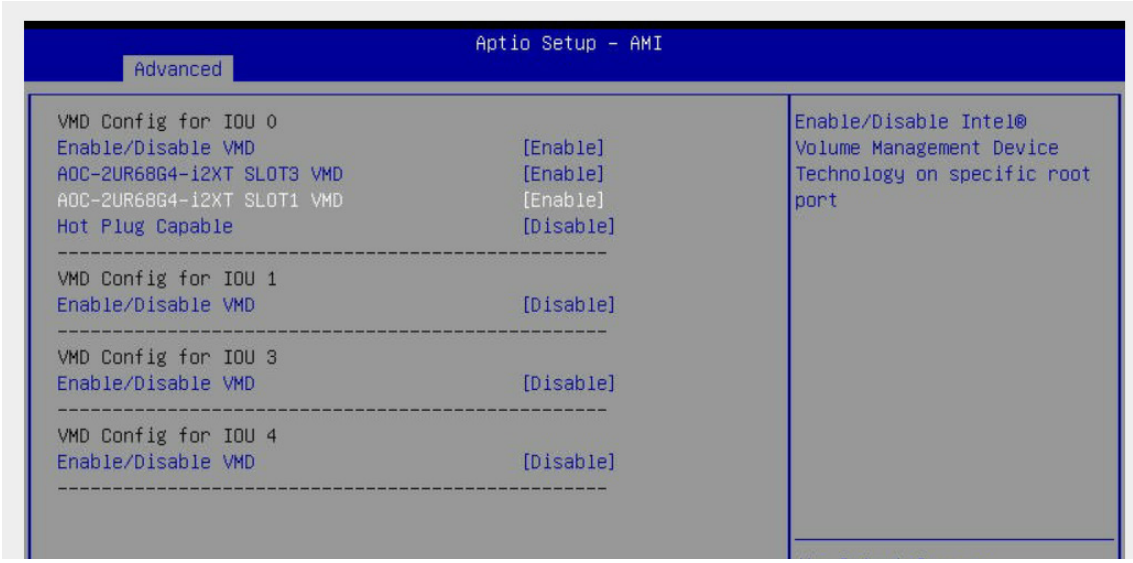

Figure 6-11. BIOS, Enabling CPU2 (Example)

7. Choose whether to make the NVMe drives in this IOU **Hot Plug Capable** by selecting Enabled or Disabled.

8. Repeat steps 4 through 7 for each IOU # on each CPU to enable VMD on the desired NVMe ports.

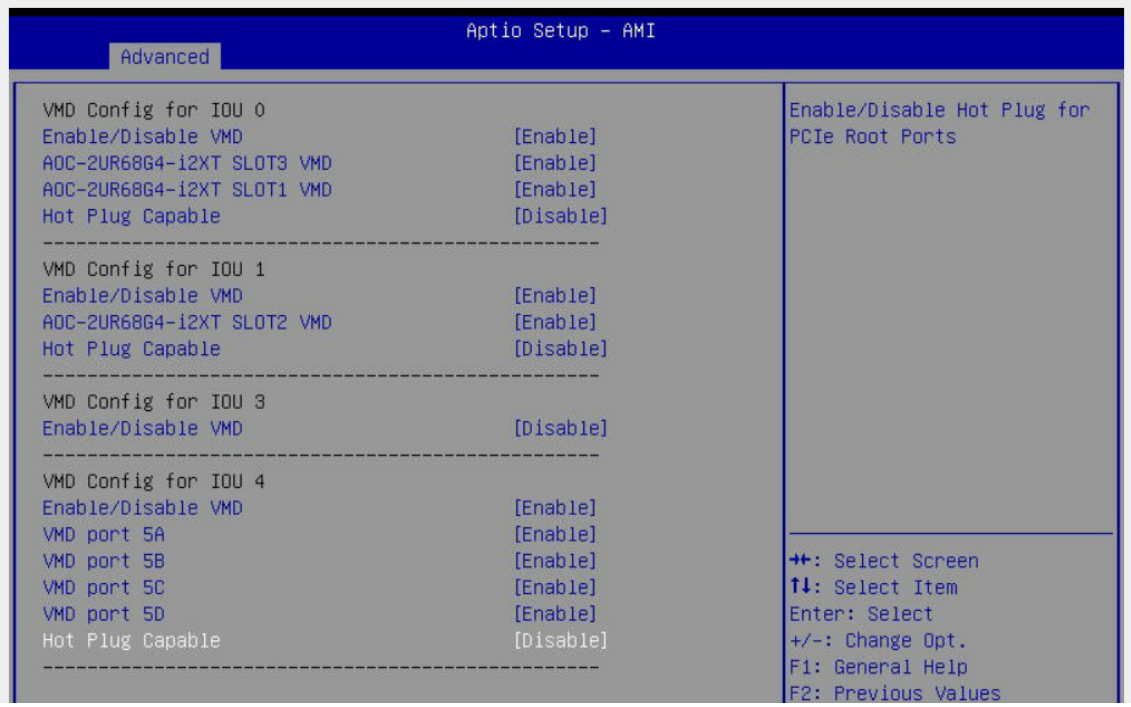

Figure 6-12. BIOS, Enabling CPU2 Completed (Example, SYS=220U-TNR)

9. Press [F4] to save the configuration and reboot the system.

Note: If there is an existing RAID configuration, delete the RAID volume associated with the VMD controller before disabling the controller. Failure to do so may lead to unexpected behavior.

Note: The effects of physically changing or swapping a CPU on the VMD controller have not been thoroughly tested or documented.

Creating NVMe RAID Configurations

1. Open **Advanced > Intel(R) Virtual RAID on CPU > All Intel VMD Controllers > Create RAID Volume**.

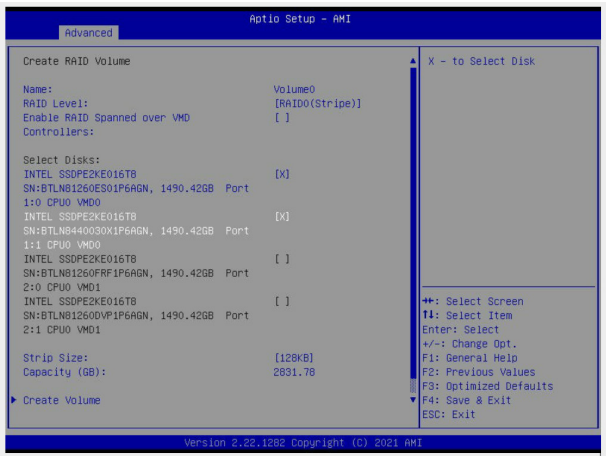

Figure 6-13. Created Volume *without* enabling RAID spanned over VMD controller

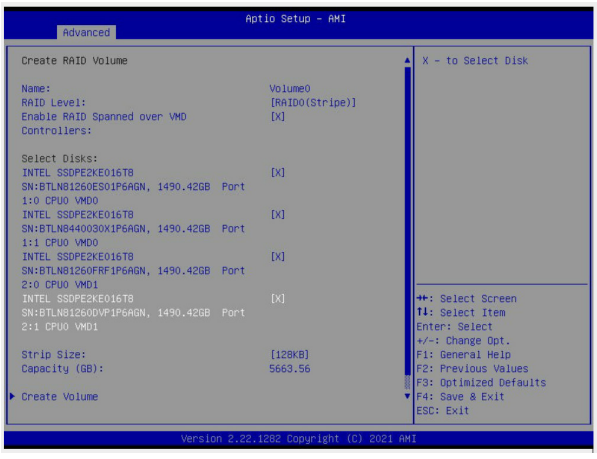

Figure 6-14. Created Volume *with* enabling RAID spanned over VMD controller

2. Set **Name**.
3. Set **RAID Level**.
4. If cross-controller RAID is required, select **Enable RAID spanned over VMD Controller**.
5. Select specific disks for RAID with an [X].
   - RAID0: Select at least two [2 - 24] disks
   - RAID1: Select only two disks
   - RAID5: Select at least three [3 - 24] disks
   - RAID10: Select only four disks
6. Select **Strip Size** (Default 64KB).
7. Select **Create Volume**.
8. If another RAID is needed, start again at step 1.

Status Indications

An LED indicator on the drive carrier shows the RAID status of the drive.

Drive Carrier Status LED Indicator	
Status	**State (red)**
Normal function	Off
Locating	4 Hz blink
Fault	Solid on
Rebuilding	1 Hz Blink

IBPI SFF 8489 Defined Status LED States

Hot Swap Drives

Intel VMD enables hot-plug and hot-unplug for NVMe SSDs, whether from Intel or other manufacturers. Under vSphere ESXi, several steps are necessary to avoid potential stability issues. See the information at link [1] below.

Hot-unplug

1. Prevent devices from being re-detected during rescan:

```
esxcli storage core claiming autoclaim --enabled=false
```

2. Unmount the VMFS volumes on the device. Check [2] for details.
3. Detach the device. Check [3] for details.
4. Physically remove the device.

Hot-plug

- Physically install the device.

ESXi will automatically discover NVMe SSDs, but a manual scan may be required in some cases.

Related Information Links

[1] https://kb.vmware.com/s/article/2151404

[2] https://docs.vmware.com/en/VMware-vSphere/6.5/com.vmware.vsphere.storage.doc/GUID-1B56EF97-F60E-4F21-82A7-8F2A7294604D.html

[3] https://docs.vmware.com/en/VMware-vSphere/6.5/com.vmware.vsphere.storage.doc/GUID-F2E75F67-740B-4406-9F0C-A2D99A698F2A.html

6.6 GPUs

Supermicro 2U Ultra systems support graphic processing units (GPUs) when installed with some additional optional parts. GPUs have cooling requirements that can be assisted by specialized dual-level air shrouds to direct the flow from the system fans. Refer to the Supermicro product page to see the list of compatible GPUs

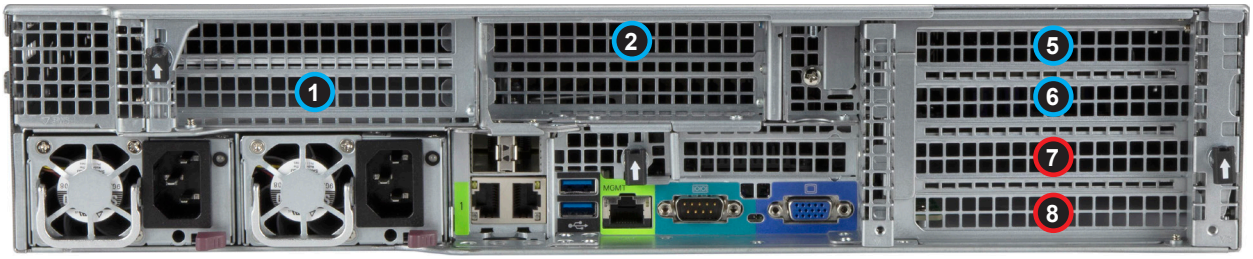

Figure 6-15. Expansion Card Chassis Slots

- Single width GPUs can be used in just the same way as PCIe expansion cards.
- Double width GPUs can be used in slots 1, 2, 5, and 7. When slots 5 and/or 7 are used, then slots 6 and 8, respectively, are not available. Also note that, due to thermal limitations, not all four slots can be filled for some GPU models.

See Chapter 3, PCI Expansion Cards for details on the various riser card options.

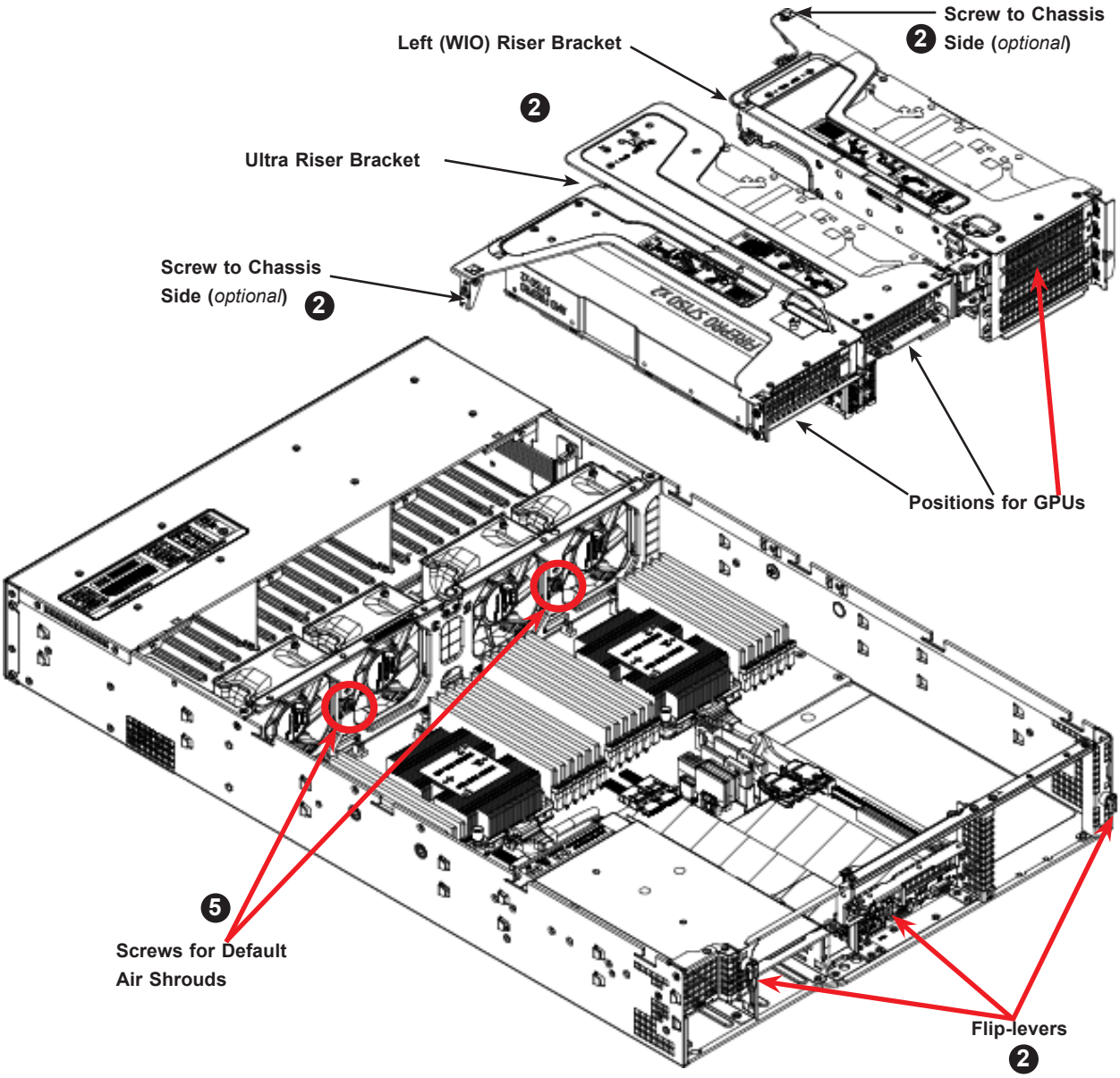

Figure 6-16. Riser Cards and GPU Positions

Adding GPUs

1. Power down the system, unplug AC cords, and remove the top chassis cover.

2. Remove the appropriate riser card bracket, pictured above. On the rear of the chassis, each bracket is secured by a small black plastic flip-lever with an arrow on it. Flip open the appropriate lever to release the bracket, then pull the bracket out of the chassis. For the Ultra riser (center) bracket, there is a thumbscrew to a standoff in the chassis center.

3. Insert the GPU into the riser card slot while aligning the GPU rear L-shaped mounting bracket. Add screws to secure the GPU L-shaped mounting bracket.

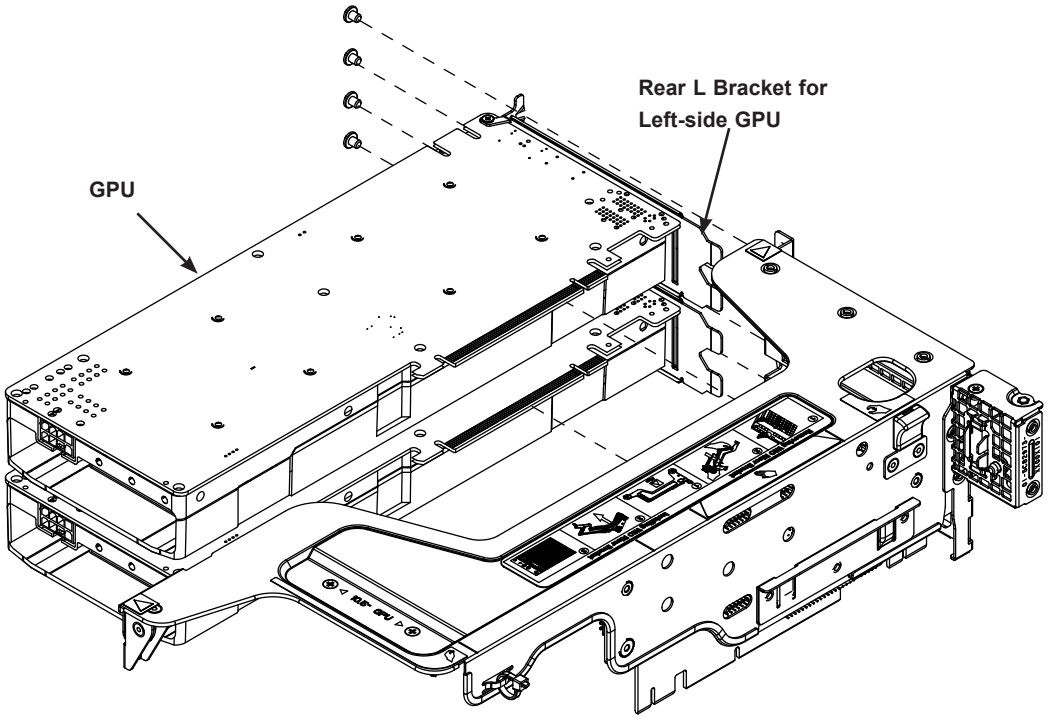

Figure 6-17. Inserting the Left-side GPUs into the Riser Card Bracket

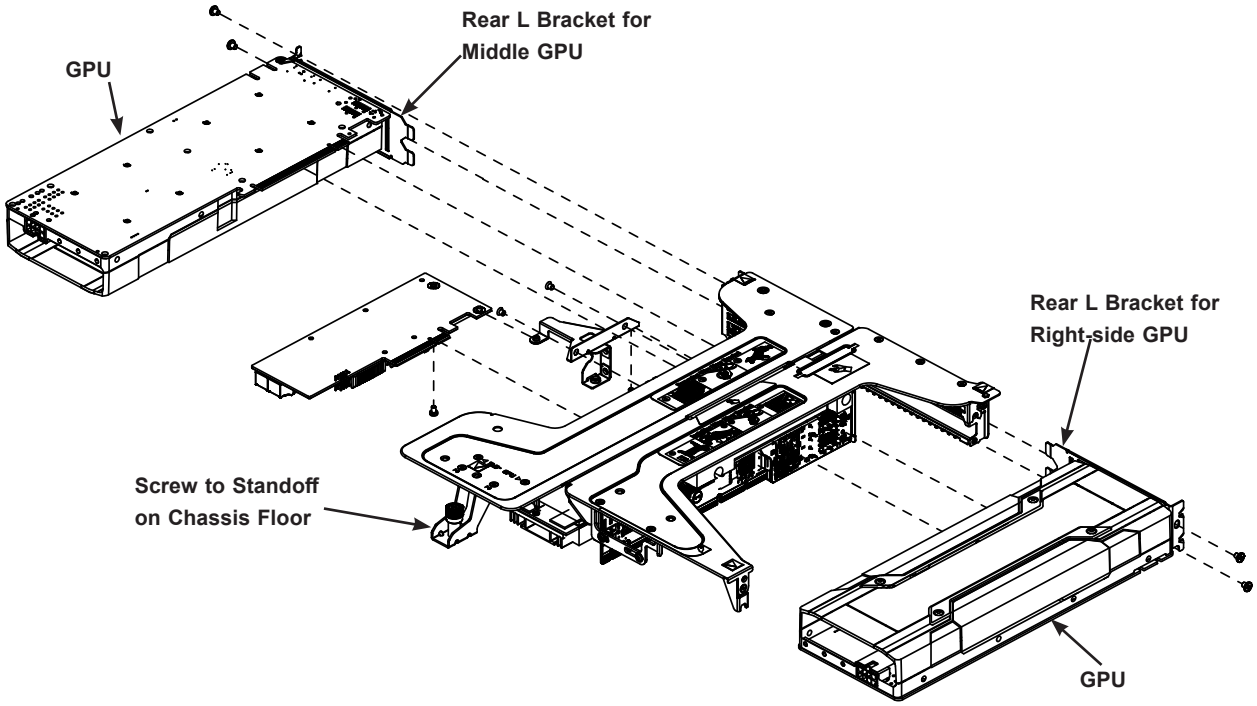

Figure 6-18. Inserting the Middle and Right-side GPUs into the Riser Card Bracket

4. Secure the front end of the GPU to the bracket with screws. For one left-side GPU, a middle GPU, or a right-side GPU the front bracket is pre-installed on the riser card bracket.

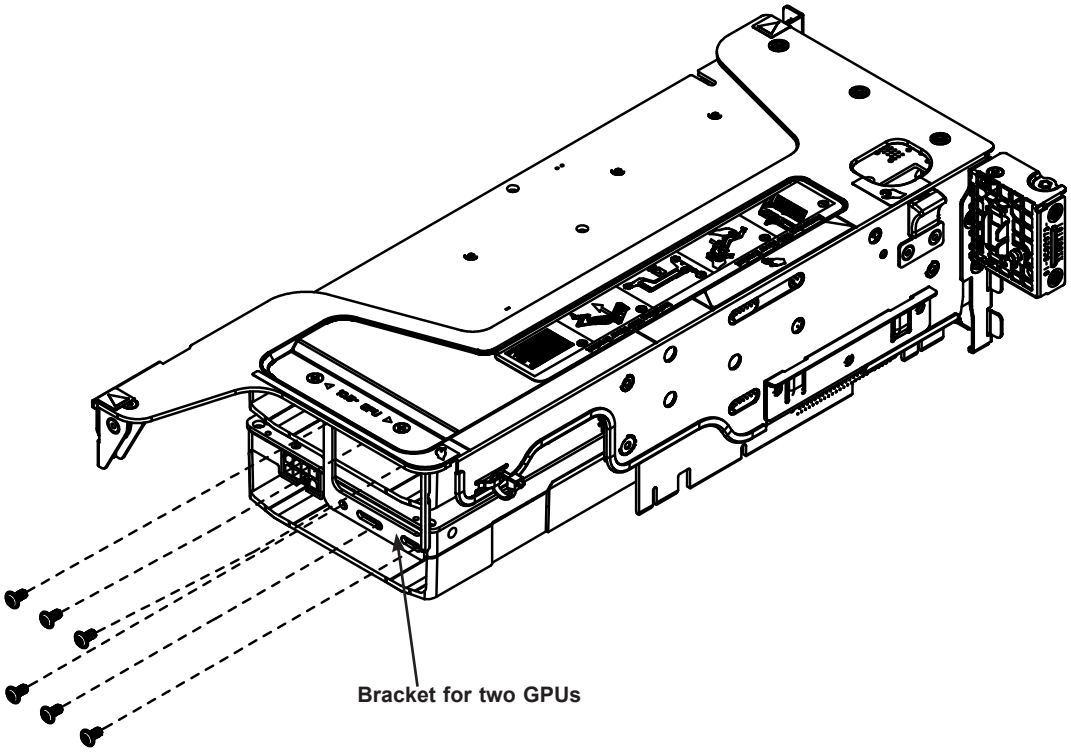

Figure 6-19. Attaching the Front Bracket for the Left-side GPUs

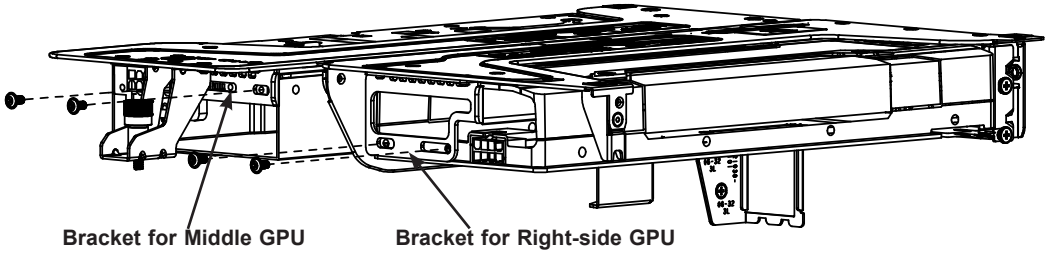

Figure 6-20. Attaching the Front Bracket for Middle and Right-side GPUs

5. Remove the two screws on the fan housing that secure the default air shrouds. (See Figure F-2)
6. Place the appropriate air shroud (see the following notes). Insert the shroud tabs into the slot at the top of the fan housing.
7. Place the riser card bracket with GPU into the chassis. First, insert the cables and front end of the GPU into the throat of the air shroud. Then align and insert the riser card into the motherboard slot while aligning the bracket into the chassis.
8. Secure the bracket into the chassis. At the chassis rear, flip the small black plastic flip-lever to secure it. For the Ultra riser (center) bracket, use the thumbscrew to secure the bracket to the standoff in the chassis center. For either bracket, an optional screw can secure it to the chassis side.
9. Route the GPU power cable and plug it into the motherboard.
10. Close and power up the system.

Notes for Installing in the Upper Left-side Position (5/6)

- Break off the necessary portions of the shroud to allow for cables. In particular, remove some tabs on the top, as indicated.
- Position the shroud as shown in Figure F-3. The right wall of the shroud just covers CPU2.
- **Routing the GPU power cables:** Guide the cables up between the GPU and the shroud, then over the top of the shroud and down to the GPU_PWR3 or GPU_PWR4 connector on the motherboard. Make cables flat as possible. It is normal for the shroud to bend slightly under the cables.

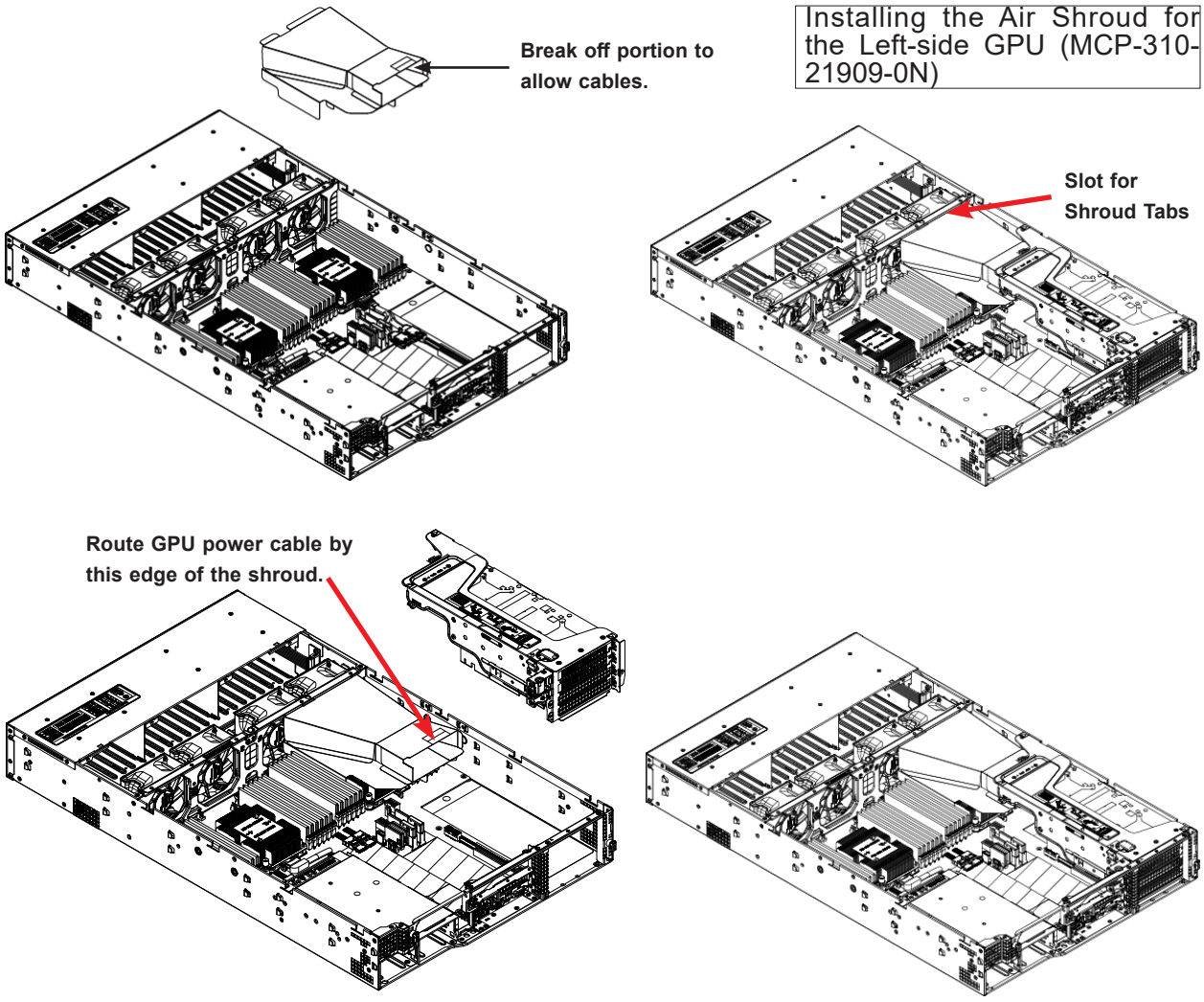

Figure 6-21. Installing a GPU on the Upper Left-side

Notes for Installing in the Lower Left-side Position (7/8)

Installation of a GPU in the 7/8 position is not supported without consultation with Supermicro due to thermal limitations. If the 7/8 position is used, mounting requires MCP-120-82904-0N bracket from accessory box.

Notes for Installing in the Right-side Position (1)

- Break off the necessary portions of the shroud to allow for cables.
- Position the shroud as shown. The right side wall of the shroud should not cover the right-most DIMM (P1-DIMMC1). The hole near the center of the shroud fits over the standoff in the center of the chassis. The left wall of the shroud fits next to CPU2.
- **Routing the GPU power cables:** Connect the cable to GPU_PWR1 on the motherboard before placing the riser bracket and GPU into the chassis. Guide the cables to the left between the GPU and the shroud.

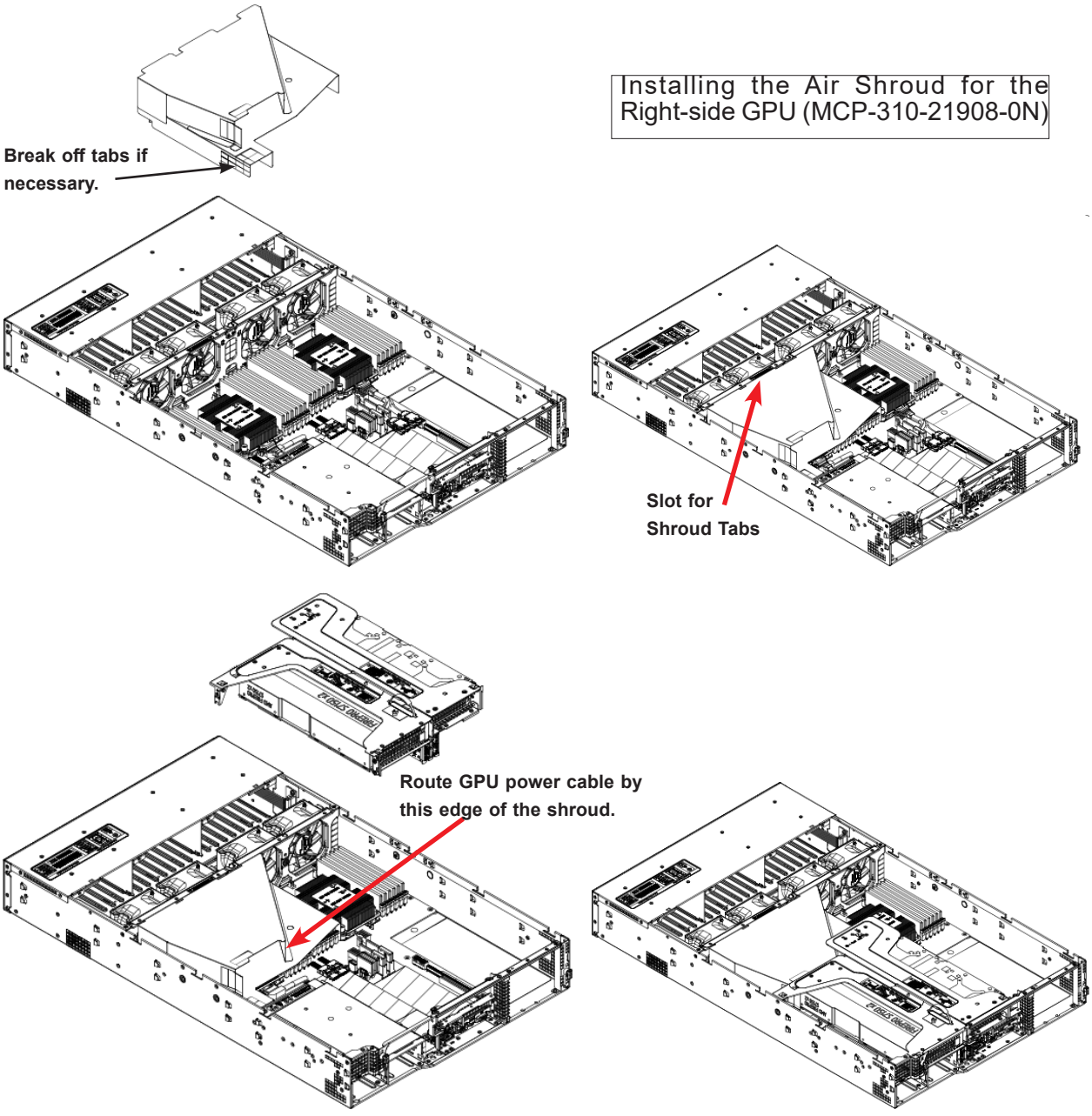

Figure 6-23. Installing a GPU on the Right-side

Chapter 7

Troubleshooting and Support

7.1 Information Resources

Website

A great deal of information is available on the Supermicro website, supermicro.com.

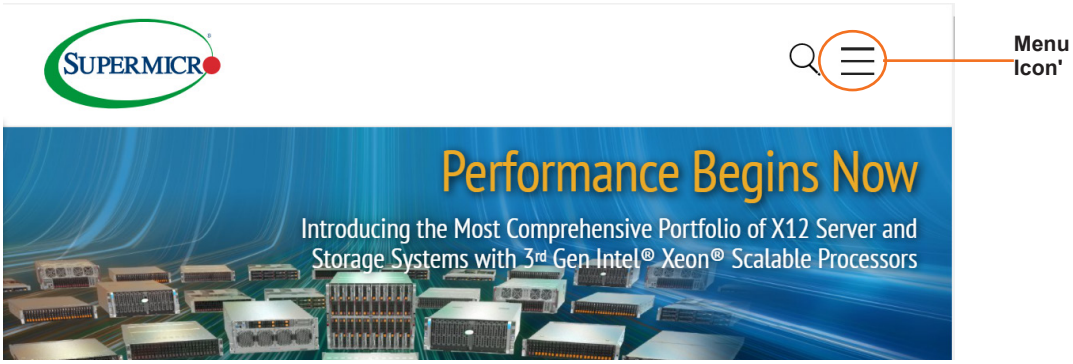

Figure 7-1. Supermicro Website

Click the menu icon, the three bars in the upper right corner, then select:

- Specifications for servers and other hardware are available by clicking the **Products** option.
- The **Support** option offers downloads (manuals, BIOS/BMC, drivers, etc.), FAQs, RMA, warranty, and other service extensions.

Direct Links for the SYS-220U-TNR System

Web SYS-220U-TNR specifications page

X12DPU-6 motherboard page for links to the Quick Reference Guide, User Manual, validated storage drives, etc.

Direct Links for General Support and Information

Frequently Asked Questions

TPM User Guide

General Memory Configuration Guide: X12

BMC User Guide

SuperDoctor5 Large Deployment Guide

Direct Links (continued)

For validated memory, use our Product Resources page

Product Matrices page for links to tables summarizing specs for systems, motherboards, power supplies, riser cards, add-on cards, etc.

Security Center for recent security notices

Supermicro Phone and Addresses

7.2 BMC Interface

The system supports a Baseboard Management Controller (BMC) interface. It provides remote access, monitoring and management. There are several BIOS settings related to the BMC.

For general documentation and information on the BMC, please visit our website at: www.supermicro.com/manuals/other/BMC_Users_Guide_X12_H12.pdf.

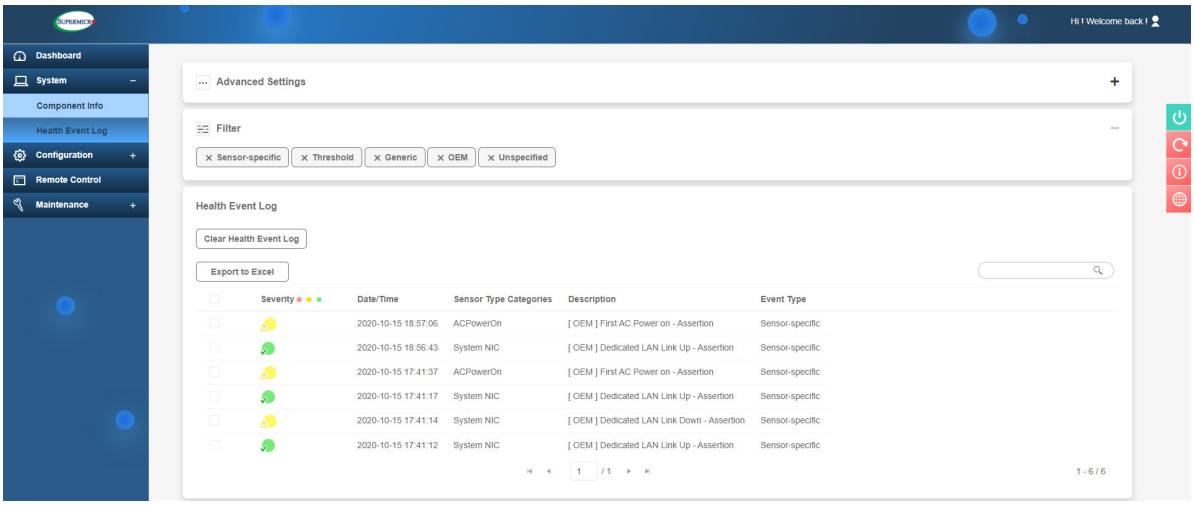

Figure 7-2. BMC Dashboard Sample

7.3 Troubleshooting Procedures

Use the following procedures to troubleshoot your system. If you have followed all of the procedures below and still need assistance, refer to the Technical Support Procedures or Returning Merchandise for Service sections in this chapter. Power down the system before changing any non hot-swap hardware components.

General Technique

If you experience unstable operation or get no boot response, try:

1. With power off, remove all but one DIMM and other added components, such as add-on cards, from the motherboard. Make sure the motherboard is not shorted to the chassis.
2. Set all jumpers to their default positions.
3. Power up. If the system boots, check for memory errors and add-on card problems.

No Power

- Check that the power LED on the motherboard is on.

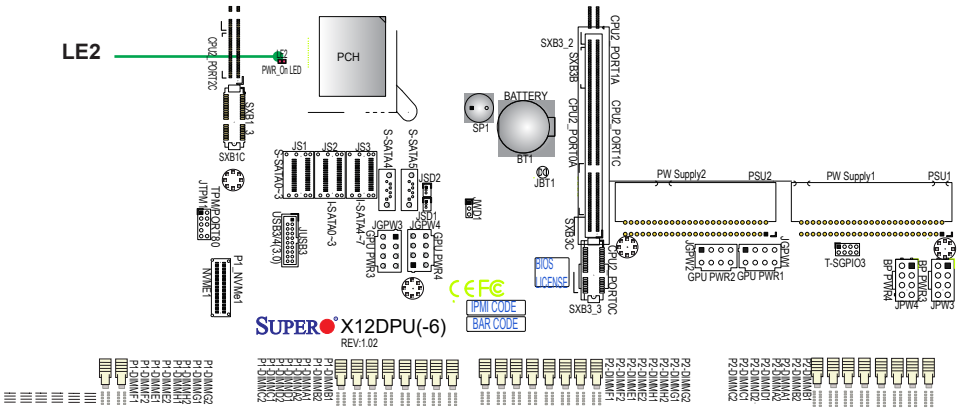

Figure 7-3. Location of the MB Power LED

- Make sure the the power suppy is seated correctly and AC input cable is attached.
- Check that the motherboard battery still supplies ~3VDC. If it does not, replace it.
- Check that the system input voltage is 100-120v or 180-240v.
- Turn the power switch on and off to test the system

No Video

If the power is on but you have no video, remove all add-on cards and cables.

System Boot Failure

If the system does not display Power-On-Self-Test (POST) or does not respond after the power is turned on, try the following:

- Turn on the system with only one DIMM module installed. If the system boots, check for bad DIMM modules or slots by following the Memory Errors Troubleshooting procedure below.

Memory Errors

- Make sure that the DIMM modules are properly and fully installed.
- Confirm that you are using the correct memory. Also, it is recommended that you use the same memory type and speed for all DIMMs in the system. See Section 3.3 for memory details.
- Check for bad DIMM modules or slots by swapping modules between slots and noting the results.

Losing the System Setup Configuration

- Use a high quality power supply. A poor quality power supply may cause the system to lose the CMOS setup information.
- Check that the motherboard battery still supplies ~3VDC. If it does not, replace it.

If the above steps do not fix the setup configuration problem, contact your vendor for repairs.

When the System Becomes Unstable

If the system becomes unstable during or after OS installation, check the following:

- CPU/BIOS support: Make sure that your CPU is supported and that you have the latest BIOS installed in your system.
- Memory: Make sure that the memory modules are supported. Refer to the product page on our website at www.supermicro.com. Test the modules using **memtest86** or a similar utility.
- Storage drives: Make sure that all drives work properly. Replace if necessary.
- System cooling: Check that all heatsink fans and system fans work properly. Check the hardware monitoring settings in the BMC to make sure that the CPU and system temperatures are within the normal range. Also check the Control panel Overheat LED.

- Adequate power supply: Make sure that the power supply provides adequate power to the system. Make sure that all power connectors are connected. Refer to the Supermicro website for the minimum power requirements.
- Proper software support: Make sure that the correct drivers are used.

If the system becomes unstable before or during OS installation, check the following:

- Source of installation: Make sure that the devices used for installation are working properly, including boot devices.
- Cable connection: Check to make sure that all cables are connected and working properly.
- Use the minimum configuration for troubleshooting: Remove all unnecessary components (starting with add-on cards first), and use the minimum configuration (but with a CPU and a memory module installed) to identify the trouble areas.
- Identify a bad component by isolating it. Check and change one component at a time.
  - Remove a component in question from the chassis, and test it in isolation. Replace it if necessary.
  - Or swap in a new component for the suspect one.
  - Or install the possibly defective component into a known good system. If the new system works, the component is likely not the cause or the problem.To find out if a component is good, swap this component with a new one to see if the system will work properly. If so, then the old component is bad. You can also install the component in question in another system. If the new system works, the component is good and the old system has problems.

7.4 POST Codes

The AMI BIOS supplies checkpoint codes, which are documented online at http://www.supermicro.com/support/manuals/ ("AMI BIOS POST Codes User's Guide").

When BIOS performs the Power On Self Test, it writes checkpoint codes to I/O port 0080h. If the computer cannot complete the boot process, the POST codes can be viewed from the BMC using the Post Snooping function.

For information on AMI updates, refer to http://www.ami.com/products/.

7.5 Crash Dump Using the BMC Dashboard

In the event of a processor internal error (IERR) that crashes your system, you may want to provide information to support staff. You can download a crash dump of status information using the BMC Dashboard. The BMC manual is available at https://www.supermicro.com/manuals/other/BMC_Users_Guide_X12_H12.pdf.

Check Error Log

1. Access the BMC web interface.
2. Click the **Server Health** tab, then **Event Log** to verify an IERR error.

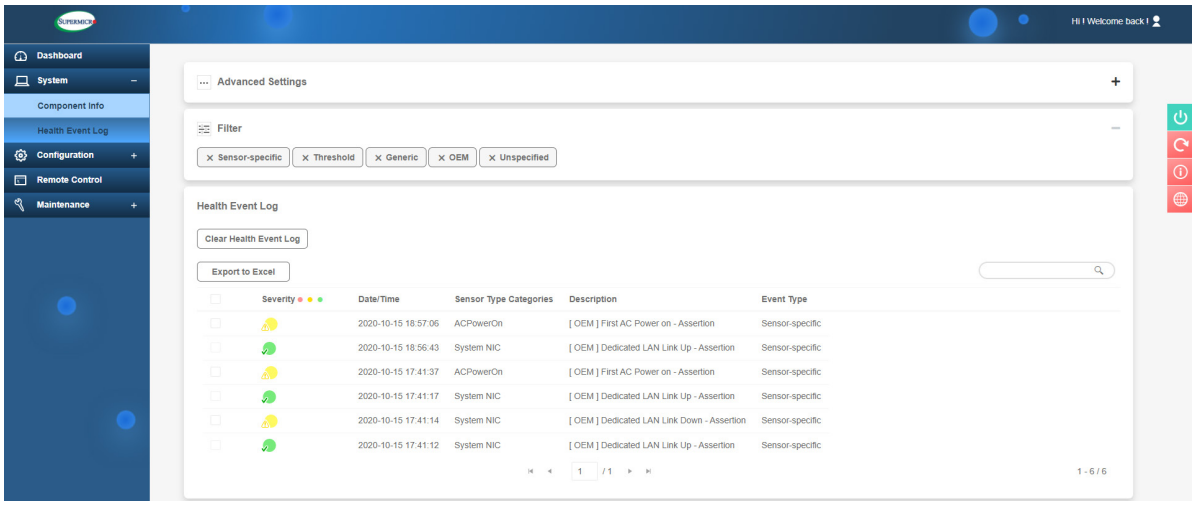

Figure 7-4. BMC Event Log

In the event of an IERR, the BMC executes a crash dump. You must download the crash dump and save it.

7.6 UEFI BIOS Recovery

Warning: Do not upgrade the BIOS unless your system has a BIOS-related issue. Flashing the wrong BIOS can cause irreparable damage to the system. In no event shall Supermicro be liable for direct, indirect, special, incidental, or consequential damages arising from a BIOS update. If you do update the BIOS, do not shut down or reset the system while the BIOS is updating to avoid possible boot failure.

Overview

The Unified Extensible Firmware Interface (UEFI) provides a software-based interface between the operating system and the platform firmware in the pre-boot environment. The UEFI specification supports an architecture-independent mechanism that will allow the UEFI OS loader stored in an add-on card to boot the system. The UEFI offers clean, hands-off management to a computer during system boot.

Recovering the UEFI BIOS Image

A UEFI BIOS flash chip consists of a recovery BIOS block and a main BIOS block (a main BIOS image). The recovery block contains critical BIOS codes, including memory detection and recovery codes for the user to flash a healthy BIOS image if the original main BIOS image is corrupted. When the system power is turned on, the recovery block codes execute first. Once this process is complete, the main BIOS code will continue with system initialization and the remaining POST (Power-On Self-Test) routines.

Note 1: Follow the BIOS recovery instructions below for BIOS recovery when the main BIOS block crashes.

Note 2: When the BIOS recovery block crashes, you will need to follow the procedures to make a Returned Merchandise Authorization (RMA) request. Also, you may use the Supermicro Update Manager (SUM) Out-of-Band (https://www.supermicro.com.tw/products/nfo/SMS_SUM.cfm) to reflash the BIOS.

Recovering the Main BIOS Block with a USB Device

This feature allows the user to recover the main BIOS image using a USB-attached device without additional utilities used. A USB flash device such as a USB Flash Drive, or a USB CD/DVD ROM/RW device can be used for this purpose. However, a USB Hard Disk drive cannot be used for BIOS recovery at this time.

The file system supported by the recovery block is FAT (including FAT12, FAT16, and FAT32) which is installed on a bootable or non-bootable USB-attached device. However, the BIOS might need several minutes to locate the SUPER.ROM file if the media size becomes too large due to the huge volumes of folders and files stored in the device.

To perform UEFI BIOS recovery using a USB-attached device, follow the instructions below.

1. Using a different machine, copy the "Super.ROM" binary image file into the Root "\" directory of a USB device or a writable CD/DVD.

   Note 1: If you cannot locate the "Super.ROM" file in your drive disk, visit our website at www.supermicro.com to download the BIOS package. Extract the BIOS binary image into a USB flash device and rename it "Super.ROM" for the BIOS recovery use.

   Note 2: Before recovering the main BIOS image, confirm that the "Super.ROM" binary image file you download is the same version or a close version meant for your motherboard.

2. Insert the USB device that contains the new BIOS image ("Super.ROM") into your USB drive and reset the system when the following screen appears.

3. After locating the healthy BIOS binary image, the system will enter the BIOS Recovery menu as shown below.



Note: At this point, you may decide if you want to start the BIOS recovery. If you decide to proceed with BIOS recovery, follow the procedures below.

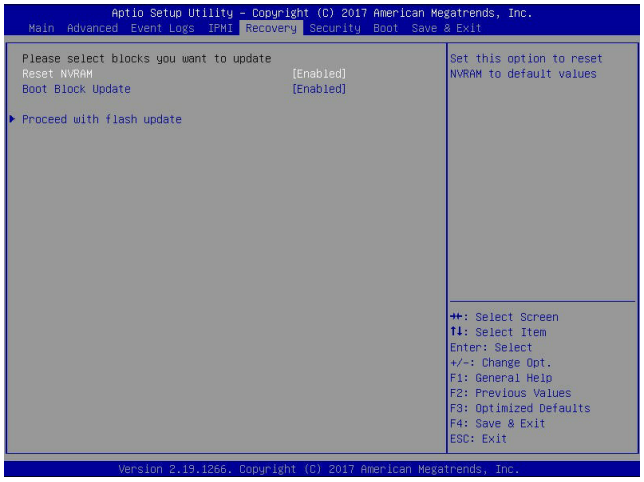

4. When the screen as shown above displays, use the arrow keys to select the item "Proceed with flash update" and press the <Enter> key. You will see the BIOS recovery progress as shown in the screen below.

   Note: *Do not interrupt the BIOS flashing process until it has completed*.

5. After the BIOS recovery process is complete, press any key to reboot the system.

6. Using a different system, extract the BIOS package into a USB flash drive.

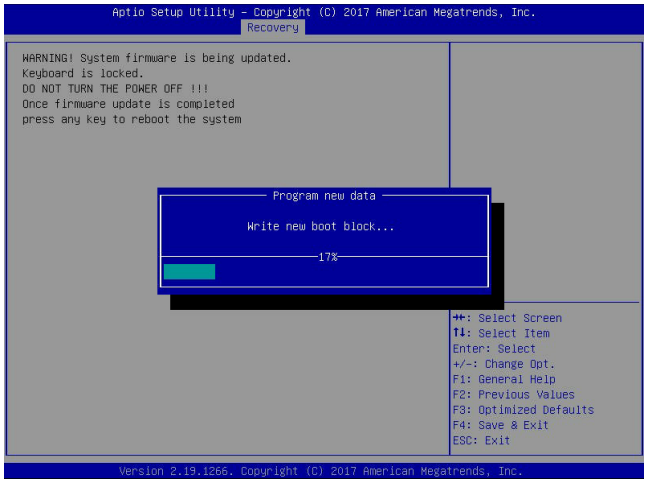

7. Press <Del> continuously during system boot to enter the BIOS Setup utility. From the top of the tool bar, select Boot to enter the submenu. From the submenu list, select Boot

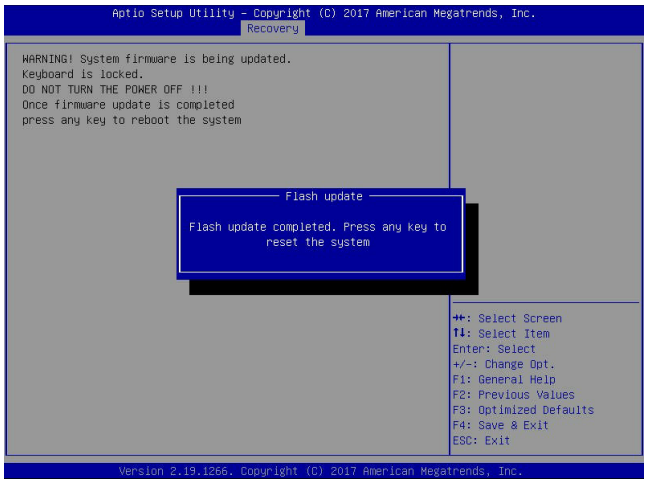

Option #1 as shown below. Then, set Boot Option #1 to [UEFI AP:UEFI: Built-in EFI Shell]. Press <F4> to save the settings and exit the BIOS Setup utility.

8. When the UEFI Shell prompt appears, type fs# to change the device directory path. Go to the directory that contains the BIOS package you extracted earlier from Step 6. Enter flash.nsh BIOSname.### at the prompt to start the BIOS update process.

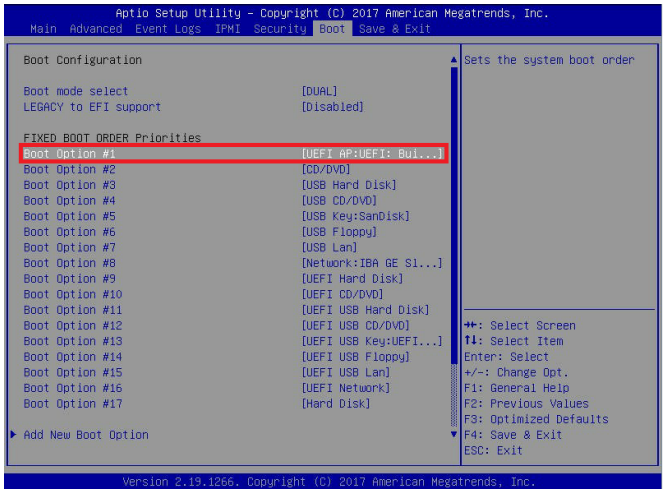

Note: *Do not interrupt this process* until the BIOS flashing is complete.

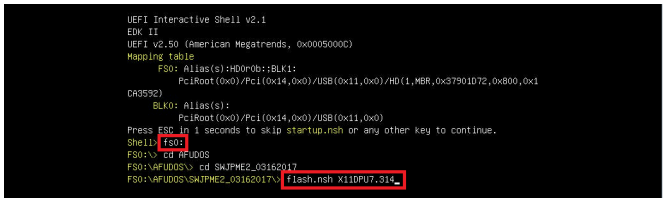

9. The screen above indicates that the BIOS update process is complete. When you see the screen above, unplug the AC power cable from the power supply, clear CMOS, and plug

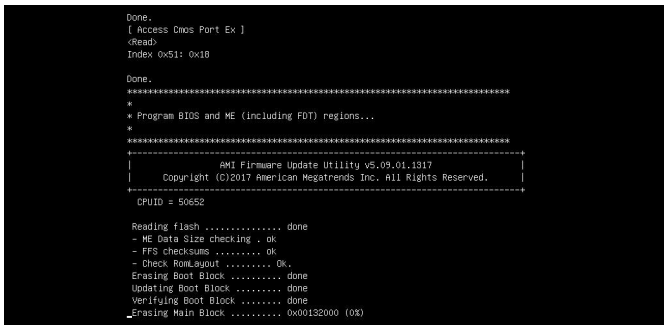

the AC power cable in the power supply again to power on the system.

10. Press <Del> continuously to enter the BIOS Setup utility.

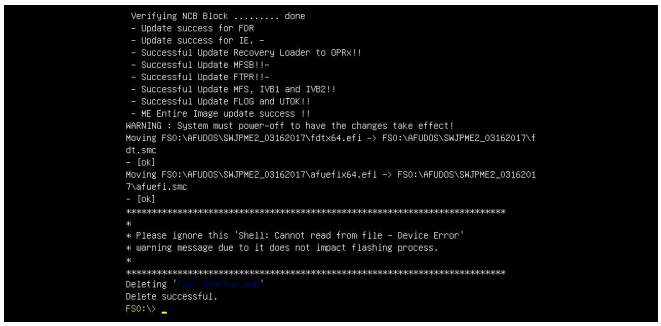

11. Press <F3> to load the default settings.

12. After loading the default settings, press <F4> to save the settings and exit the BIOS Setup utility.

7.7 CMOS Clear

JBT1 is used to clear CMOS, which will also clear any passwords. Instead of pins, this jumper consists of contact pads to prevent accidentally clearing the contents of CMOS.

To Clear CMOS

1. First power down the system completely.
2. Remove the cover of the chassis to access the motherboard.
3. Remove the onboard battery from the motherboard.
4. Short the CMOS pads with a metal object such as a small screwdriver for at least four seconds.



JBT1 contact pads

5. Remove the screwdriver or shorting device.
6. Replace the cover, reconnect the power cords and power on the system.

Notes: Clearing CMOS will also clear all passwords.

Do not use the PW_ON connector to clear CMOS.

7.8 BMC Reset

The BMC can be reset using the UID button. First, move the JUID jumper to pins 3/4 (see Section 4.4).

- Reset – Press and hold the button. After six seconds, the LED blinks at 2Hz. The BMC resets and the reset duration is approximately 250 ms. Then the BMC starts to boot.
- Restore factory default configuration – Hold the button for twelve seconds. The LED blinks at 4Hz while defaults are configured. **Note**: All BMC settings including username and password will be removed except the FRU and network settings.

Firmware update – When the BMC firmware is being updated, the UID LED blinks at 10Hz.

BMC Reset Options		
Event	**UID LED**	**BMC Heartbeat LED**
Reset	Blue, Blinks at 2Hz	Green, solid
Restore Defaults	Blue, Blinks at 4Hz	Off
Update	Blue, Blinks at 10Hz	

7.9 Where to Get Replacement Components

If you need replacement parts for your system, to ensure the highest level of professional service and technical support, purchase exclusively from our Supermicro Authorized Distributors/System Integrators/Resellers. A list can be found at: http://www.supermicro.com. Click the "Where to Buy" tab.

7.10 Reporting an Issue

Technical Support Procedures

Before contacting Technical Support, please take the following steps. If your system was purchased through a distributor or reseller, please contact them for troubleshooting services. They have the best knowledge of your specific system configuration.

1. Please review the Troubleshooting Procedures in this manual and Frequently Asked Questions on our website before contacting Technical Support.
2. BIOS upgrades can be downloaded from our website. **Note**: Not all BIOS can be flashed depending on the modifications to the boot block code.
3. If you still cannot resolve the problem, include the following information when contacting us for technical support:
   - System, motherboard, and chassis model numbers and PCB revision number
   - BIOS release date/version (this can be seen on the initial display when your system first boots up)
   - System configuration

An example of a Technical Support form is posted on our website. Distributors: For immediate assistance, please have your account number ready when contacting our technical support department by email.

Returning Merchandise for Service

A receipt or copy of your invoice marked with the date of purchase is required before any warranty service will be rendered. You can obtain service by calling your vendor for a Returned Merchandise Authorization (RMA) number. When returning to the manufacturer, the RMA number should be prominently displayed on the outside of the shipping carton, and mailed prepaid or hand-carried. Shipping and handling charges will be applied for all orders that must be mailed when service is complete.

For faster service, RMA authorizations may be requested online (http://www.supermicro.com/support/rma/).

Whenever possible, repack the chassis in the original Supermicro carton, using the original packaging material. If these are no longer available, be sure to pack the chassis securely, using packaging material to surround the chassis so that it does not shift within the carton and become damaged during shipping.

This warranty only covers normal consumer use and does not cover damages incurred in shipping or from failure due to the alteration, misuse, abuse or improper maintenance of products.

During the warranty period, contact your distributor first for any product problems.

Vendor Support Filing System

For issues related to Intel, use the Intel IPS filing system:

https://www.intel.com/content/www/us/en/design/support/ips/training/welcome.html

For issues related to Red Hat Enterprise Linux, since it is a subscription based OS, contact your account representative.

7.11 Feedback

Supermicro values your feedback as we strive to improve our customer experience in all facets of our business. To provide feedback on our manuals, please email us at techwriterteam@supermicro.com.

7.12 Contacting Supermicro

Headquarters

Address:	Super Micro Computer, Inc. 980 Rock Ave. San Jose, CA 95131 U.S.A.
Tel:	+1 (408) 503-8000
Fax:	+1 (408) 503-8008
Email:	marketing@supermicro.com (General Information) Sales-USA@supermicro.com (Sales Inquiries) Government_Sales-USA@supermicro.com (Gov. Sales Inquiries) support@supermicro.com (Technical Support) RMA@supermicro.com (RMA Support) Webmaster@supermicro.com (Webmaster)
Website:	www.supermicro.com

Europe

Address:	Super Micro Computer B.V. Het Sterrenbeeld 28, 5215 ML 's-Hertogenbosch, The Netherlands
Tel:	+31 (0) 73-6400390
Fax:	+31 (0) 73-6416525
Email:	Sales_Europe@supermicro.com (Sales Inquiries) Support_Europe@supermicro.com (Technical Support) RMA_Europe@supermicro.com (RMA Support)
Website:	www.supermicro.nl

Asia-Pacific

Address:	Super Micro Computer, Inc. 3F, No. 150, Jian 1st Rd. Zhonghe Dist., New Taipei City 235 Taiwan (R.O.C)
Tel:	+886-(2) 8226-3990
Fax:	+886-(2) 8226-3992
Email:	Sales-Asia@supermicro.com.tw (Sales Inquiries) Support@supermicro.com.tw (Technical Support) RMA@supermicro.com.tw (RMA Support)
Website:	www.supermicro.com.tw

Appendix A

Standardized Warning Statements for AC Systems

About Standardized Warning Statements

The following statements are industry standard warnings, provided to warn the user of situations which have the potential for bodily injury. Should you have questions or experience difficulty, contact Supermicro's Technical Support department for assistance. Only certified technicians should attempt to install or configure components.

Read this appendix in its entirety before installing or configuring components in the Supermicro chassis.

These warnings may also be found on our website at http://www.supermicro.com/about/policies/safety_information.cfm.

Warning Definition



Warning! This warning symbol means danger. You are in a situation that could cause bodily injury. Before you work on any equipment, be aware of the hazards involved with electrical circuitry and be familiar with standard practices for preventing accidents.

警告の定義

この警告サインは危険を意味します。

人身事故につながる可能性がありますので、いずれの機器でも動作させる前に、

電気回路に含まれる危険性に注意して、標準的な事故防止策に精通して下さい。

此警告符号代表危险。

您正处于可能受到严重伤害的工作环境中。在您使用设备开始工作之前，必须充分意识到触电的危险，并熟练掌握防止事故发生的标准工作程序。请根据每项警告结尾的声明号码找到此设备的安全性警告说明的翻译文本。

此警告符號代表危險。

您正處於可能身體可能會受損傷的工作環境中。在您使用任何設備之前，請注意觸電的危險，並且要熟悉預防事故發生的標準工作程序。請依照每一注意事項後的號碼找到相關的翻譯說明內容。

Warnung

WICHTIGE SICHERHEITSHINWEISE

Dieses Warnsymbol bedeutet Gefahr. Sie befinden sich in einer Situation, die zu Verletzungen führen kann. Machen Sie sich vor der Arbeit mit Geräten mit den Gefahren elektrischer Schaltungen und den üblichen Verfahren zur Vorbeugung vor Unfällen vertraut. Suchen Sie mit der am Ende jeder Warnung angegebenen Anweisungsnummer nach der jeweiligen Übersetzung in den übersetzten Sicherheitshinweisen, die zusammen mit diesem Gerät ausgeliefert wurden.

BEWAHREN SIE DIESE HINWEISE GUT AUF.

INSTRUCCIONES IMPORTANTES DE SEGURIDAD

Este símbolo de aviso indica peligro. Existe riesgo para su integridad física. Antes de manipular cualquier equipo, considere los riesgos de la corriente eléctrica y familiarícese con los procedimientos estándar de prevención de accidentes. Al final de cada advertencia encontrará el número que le ayudará a encontrar el texto traducido en el apartado de traducciones que acompaña a este dispositivo.

GUARDE ESTAS INSTRUCCIONES.

IMPORTANTES INFORMATIONS DE SÉCURITÉ

Ce symbole d'avertissement indique un danger. Vous vous trouvez dans une situation pouvant entraîner des blessures ou des dommages corporels. Avant de travailler sur un équipement, soyez conscient des dangers liés aux circuits électriques et familiarisez-vous avec les procédures couramment utilisées pour éviter les accidents. Pour prendre connaissance des traductions des avertissements figurant dans les consignes de sécurité traduites qui accompagnent cet appareil, référez-vous au numéro de l'instruction situé à la fin de chaque avertissement.

CONSERVEZ CES INFORMATIONS.

תקנון הצהרות אזהרה

הצהרות הבאות הן אזהרות על פי תקני התעשייה, על מנת להזהיר את המשתמש מפני חבלה פיזית אפשרית. במידה ויש שאלות או היתקלות בבעיה כלשהי, יש ליצור קשר עם מחלקת תמיכה טכנית של סופרמיקרו. טכנאים מוסמכים בלבד רשאים להתקין או להגדיר את הרכיבים.

יש לקרוא את הנספח במלואו לפני התקנת או הגדרת הרכיבים במארזי סופרמיקרו.

ا كً ف حالة وٌكي أى تتسبب ف اصابة جسد ةٌ هذا الزهز عٌ خطز !تحذ زٌ .
قبل أى تعول على أي هعذات،كي على علن بالوخاطز ال ٱجوة عي الذوائز
الكهزبائ ةٍ
وكي على درا ةٌ بالووارسات البقائ ةٍ لو عٌ وقع أي حادث
استخذم رقن الب إٍى الو صٌص ف هًا ةٌ كل تحذ زٌ للعشر تزجوتها

안전을 위한 주의사항

경고!

이 경고 기호는 위험이 있음을 알려 줍니다. 작업자의 신체에 부상을 야기 할 수 있는 상태에 있게 됩니다. 모든 장비에 대한 작업을 수행하기 전에 전기회로와 관련된 위험요소들을 확인하시고 사전에 사고를 방지할 수 있도록 표준 작업절차를 준수해 주시기 바랍니다.

해당 번역문을 찾기 위해 각 경고의 마지막 부분에 제공된 경고문 번호를 참조하십시오

BELANGRIJKE VEILIGHEIDSINSTRUCTIES

Dit waarschuwings symbool betekent gevaar. U verkeert in een situatie die lichamelijk letsel kan veroorzaken. Voordat u aan enige apparatuur gaat werken, dient u zich bewust te zijn van de bij een elektrische installatie betrokken risico's en dient u op de hoogte te zijn van de standaard procedures om ongelukken te voorkomen. Gebruik de nummers aan het eind van elke waarschuwing om deze te herleiden naar de desbetreffende locatie.

BEWAAR DEZE INSTRUCTIES

Installation Instructions



Warning! Read the installation instructions before connecting the system to the power source.

設置手順書

システムを電源に接続する前に、設置手順書をお読み下さい。

警告

将此系统连接电源前,请先阅读安装说明。

警告

將系統與電源連接前，請先閱讀安裝說明。

Warnung

Vor dem Anschließen des Systems an die Stromquelle die Installationsanweisungen lesen.

¡Advertencia!

Lea las instrucciones de instalación antes de conectar el sistema a la red de alimentación.

Attention

Avant de brancher le système sur la source d'alimentation, consulter les directives d'installation.

יש לקרוא את הוראות התקנה לפני חיבור המערכת למקור מתח.

اقر إرشادات التركيب قبل توصيل النظام إلى مصدر للطاقة

시스템을 전원에 연결하기 전에 설치 안내를 읽어주십시오.

Waarschuwing

Raadpleeg de installatie-instructies voordat u het systeem op de voedingsbron aansluit.

Circuit Breaker



Warning! This product relies on the building's installation for short-circuit (overcurrent) protection. Ensure that the protective device is rated not greater than: 250 V, 20 A.

サーキット・ブレーカー

この製品は、短絡（過電流）保護装置がある建物での設置を前提としています。

保護装置の定格が250 V、20 Aを超えないことを確認下さい。

警告

此产品的短路(过载电流)保护由建筑物的供电系统提供,确保短路保护设备的额定电流不大于250V,20A。

警告

此產品的短路(過載電流)保護由建築物的供電系統提供,確保短路保護設備的額定電流不大於250V,20A。

Warnung

Dieses Produkt ist darauf angewiesen, dass im Gebäude ein Kurzschluss- bzw. Überstromschutz installiert ist. Stellen Sie sicher, dass der Nennwert der Schutzvorrichtung nicht mehr als: 250 V, 20 A beträgt.

¡Advertencia!

Este equipo utiliza el sistema de protección contra cortocircuitos (o sobrecorrientes) del edificio. Asegúrese de que el dispositivo de protección no sea superior a: 250 V, 20 A.

Attention

Pour ce qui est de la protection contre les courts-circuits (surtension), ce produit dépend de l'installation électrique du local. Vérifiez que le courant nominal du dispositif de protection n'est pas supérieur à :250 V, 20 A.

מוצר זה מסתמך על הגנה המותקנת במבנים למניעת קצר חשמלי. יש לוודא כי
המכשיר המגן מפני הקצר החשמלי הוא לא יותר מ-250VDC, 20A

هذا المنتج يعتمد على معداث الحمايت مه الدوائرالقصيرة التي تم تثبيتها في
المبنى
تأكد من أن تقييم الجهاز الوقائي ليس أكثر من : 20A, 250V

경고!

이 제품은 전원의 단락(과전류)방지에 대해서 전적으로 건물의 관련 설비에 의존합니다.
보호장치의 정격이 반드시 250V(볼트), 20A(암페어)를 초과하지 않도록 해야 합니다.

Waarschuwing

Dit product is afhankelijk van de kortsluitbeveiliging (overspanning) van uw electrische installatie. Controleer of het beveiligde aparaat niet groter gedimensioneerd is dan 250V, 20A.

Power Disconnection Warning

Warning! The system must be disconnected from all sources of power and the power cord removed from the power supply module(s) before accessing the chassis interior to install or remove system components.



電源切断の警告

システムコンポーネントの取り付けまたは取り外しのために、シャーシー内部にアクセスするには、システムの電源はすべてのソースから切断され、電源コードは電源モジュールから取り外す必要があります。

警告

在你打开机箱并安装或移除内部器件前,必须将系统完全断电,并移除电源线。

警告

在您打開機殼安裝或移除內部元件前，必須將系統完全斷電，並移除電源線。

Warnung

Das System muss von allen Quellen der Energie und vom Netzanschlusskabel getrennt sein, das von den Spg.Versorgungsteilmodulen entfernt wird, bevor es auf den Chassisinnenraum zurückgreift, um Systemsbestandteile anzubringen oder zu entfernen.

¡Advertencia!

El sistema debe ser disconnected de todas las fuentes de energía y del cable eléctrico quitado de los módulos de fuente de alimentación antes de tener acceso el interior del chasis para instalar o para quitar componentes de sistema.

Attention

Le système doit être débranché de toutes les sources de puissance ainsi que de son cordon d'alimentation secteur avant d'accéder à l'intérieur du chassis pour installer ou enlever des composants de systéme.

אזהרה מפני ניתוק חשמלי

!אזהרה

יש לנתק את המערכת מכל מקורות החשמל ויש להסיר את כבל החשמלי מהספק

.לפני גישה לחלק הפנימי של המארז לצורך התקנת או הסרת רכיבים

يجب فصم اننظاو من جميع مصادر انطاقت وإزانت سهك انكهرباء من وحدة امداد

انطاقت قبم

انصل إنى انمناطق انداخهيت نههيكم نتثبيج أو إزانت مكناث الجهاز

경고!

시스템에 부품들을 장착하거나 제거하기 위해서는 섀시 내부에 접근하기 전에 반드시 전원 공급장치로부터 연결되어있는 모든 전원과 전기코드를 분리해주어야 합니다.

Waarschuwing

Voordat u toegang neemt tot het binnenwerk van de behuizing voor het installeren of verwijderen van systeem onderdelen, dient u alle spanningsbronnen en alle stroomkabels aangesloten op de voeding(en) van de behuizing te verwijderen

Equipment Installation



Warning! Only trained and qualified personnel should be allowed to install, replace, or service this equipment.

機器の設置

トレーニングを受け認定された人だけがこの装置の設置、交換、またはサービスを許可されています。

警告

只有经过培训且具有资格的人员才能进行此设备的安装、更换和维修。

警告

只有經過受訓且具資格人員才可安裝、更換與維修此設備。

Warnung

Das Installieren, Ersetzen oder Bedienen dieser Ausrüstung sollte nur geschultem, qualifiziertem Personal gestattet werden.

¡Advertencia!

Solamente el personal calificado debe instalar, reemplazar o utilizar este equipo.

Attention

Il est vivement recommandé de confier l'installation, le remplacement et la maintenance de ces équipements à des personnels qualifiés et expérimentés.

אזהרה!

צוות מוסמך בלבד רשאי להתקין, להחליף את הציוד או לתת שירות עבור הציוד.

والمدربيه لتزكيب واستبدال أو خدمة هذا الجهاس يجب أن يسمح فقط للمظفيه المؤهليه

경고!

훈련을 받고 공인된 기술자만이 이 장비의 설치, 교체 또는 서비스를 수행할 수 있습니다.

Waarschuwing

Deze apparatuur mag alleen worden geïnstalleerd, vervangen of hersteld door geschoold en gekwalificeerd personeel.

Restricted Area



Warning! This unit is intended for installation in restricted access areas. A restricted access area can be accessed only through the use of a special tool, lock and key, or other means of security. (This warning does not apply to workstations).

アクセス制限区域

このユニットは、アクセス制限区域に設置されることを想定しています。

アクセス制限区域は、特別なツール、鍵と錠前、その他のセキュリティの手段を用いてのみ出入りが可能です。

警告

此部件应安装在限制进出的场所，限制进出的场所指只能通过使用特殊工具、锁和钥匙或其它安全手段进出的场所。

警告

此裝置僅限安裝於進出管制區域，進出管制區域係指僅能以特殊工具、鎖頭及鑰匙或其他安全方式才能進入的區域。

Warnung

Diese Einheit ist zur Installation in Bereichen mit beschränktem Zutritt vorgesehen. Der Zutritt zu derartigen Bereichen ist nur mit einem Spezialwerkzeug, Schloss und Schlüssel oder einer sonstigen Sicherheitsvorkehrung möglich.

¡Advertencia!

Esta unidad ha sido diseñada para instalación en áreas de acceso restringido. Sólo puede obtenerse acceso a una de estas áreas mediante la utilización de una herramienta especial, cerradura con llave u otro medio de seguridad.

Attention

Cet appareil doit être installée dans des zones d'accès réservés. L'accès à une zone d'accès réservé n'est possible qu'en utilisant un outil spécial, un mécanisme de verrouillage et une clé, ou tout autre moyen de sécurité.

אזור עם גישה מוגבלת

אזהרה!

יש להתקין את היחידה באזורים שיש בהם הגבלת גישה. הגישה ניתנת בעזרת
'כלי אבטחה בלבד)מפתח, מנעול וכד.)

تخصيص هذه انحذة نترك بُها ف مناطق محظورة تم .
،مَكن انصبل إن منطقت محظورة فقط من خلال استخذاو أداة خاصت
أو أ وس هُت أخري نلالأمما قفم ومفتاح

경고!

이 장치는 접근이 제한된 구역에 설치하도록 되어있습니다. 특수도구, 잠금 장치 및 키, 또는 기타 보안 수단을 통해서만 접근 제한 구역에 들어갈 수 있습니다.

Waarschuwing

Dit apparaat is bedoeld voor installatie in gebieden met een beperkte toegang. Toegang tot dergelijke gebieden kunnen alleen verkregen worden door gebruik te maken van speciaal gereedschap, slot en sleutel of andere veiligheidsmaatregelen.

Battery Handling



Warning! There is the danger of explosion if the battery is replaced incorrectly. Replace the battery only with the same or equivalent type recommended by the manufacturer. Dispose of used batteries according to the manufacturer's instructions

電池の取り扱い

電池交換が正しく行われなかった場合、破裂の危険性があります。交換する電池はメーカーが推奨する型、または同等のものを使用下さい。使用済電池は製造元の指示に従って処分して下さい。

警告

电池更换不当会有爆炸危险。请只使用同类电池或制造商推荐的功能相当的电池更换原有电池。请按制造商的说明处理废旧电池。

警告

電池更換不當會有爆炸危險。請使用製造商建議之相同或功能相當的電池更換原有電池。請按照製造商的說明指示處理廢棄舊電池。

Warnung

Bei Einsetzen einer falschen Batterie besteht Explosionsgefahr. Ersetzen Sie die Batterie nur durch den gleichen oder vom Hersteller empfohlenen Batterietyp. Entsorgen Sie die benutzten Batterien nach den Anweisungen des Herstellers.

Attention

Danger d'explosion si la pile n'est pas remplacée correctement. Ne la remplacer que par une pile de type semblable ou équivalent, recommandée par le fabricant. Jeter les piles usagées conformément aux instructions du fabricant.

¡Advertencia!

Existe peligro de explosión si la batería se reemplaza de manera incorrecta. Reemplazar la batería exclusivamente con el mismo tipo o el equivalente recomendado por el fabricante. Desechar las baterías gastadas según las instrucciones del fabricante.

!אזהרה

קיימת סכנת פיצוץ של הסוללה במידה והוחלפה בדרך לא תקינה. יש להחליף
את הסוללה בסוג התואם מחברת יצרן מומלצת.
סילוק הסוללות המשומשות יש לבצע לפי הוראות היצרן.

هناك خطر من انفجار في حالة اسحبذال البطارية بطريقة غير صحيحة فعليل
اسحبذال البطارية
فقط بنفس النبع أو ما يعادلها مما أوصث به الشرمة المصنعة
جخلص من البطاريات المسحعملة وفقا لحعليمات الشرمة الصانعة

경고!

배터리가 올바르게 교체되지 않으면 폭발의 위험이 있습니다. 기존 배터리와 동일하거나 제조사에서 권장하는 동등한 종류의 배터리로만 교체해야 합니다. 제조사의 안내에 따라 사용된 배터리를 처리하여 주십시오.

Waarschuwing

Er is ontploffingsgevaar indien de batterij verkeerd vervangen wordt. Vervang de batterij slechts met hetzelfde of een equivalent type die door de fabrikant aanbevolen wordt. Gebruikte batterijen dienen overeenkomstig fabrieksvoorschriften afgevoerd te worden.

Redundant Power Supplies



Warning! This unit might have more than one power supply connection. All connections must be removed to de-energize the unit.

冗長電源装置

このユニットは複数の電源装置が接続されている場合があります。

ユニットの電源を切るためには、すべての接続を取り外さなければなりません。

警告
此部件连接的电源可能不止一个，必须将所有电源断开才能停止给该部件供电。

警告
此裝置連接的電源可能不只一個，必須切斷所有電源才能停止對該裝置的供電。

Warnung

Dieses Gerät kann mehr als eine Stromzufuhr haben. Um sicherzustellen, dass der Einheit kein trom zugeführt wird, müssen alle Verbindungen entfernt werden.

¡Advertencia!

Puede que esta unidad tenga más de una conexión para fuentes de alimentación. Para cortar por completo el suministro de energía, deben desconectarse todas las conexiones.

Attention

Cette unité peut avoir plus d'une connexion d'alimentation. Pour supprimer toute tension et tout courant électrique de l'unité, toutes les connexions d'alimentation doivent être débranchées.

אם קיים יותר מספק אחד

אזהרה!

ליחדה יש יותר מחיבור אחד של ספק. יש להסיר את כל החיבורים על מנת לרוקן את היחידה.

قد يكون لهذا الجهاز عدة اتصالات بوحدات امداد الطاقة .

يجب إزالة كافة الاتصالات لعسل الوحدة عن الكهرباء

경고!

이 장치에는 한 개 이상의 전원 공급 단자가 연결되어 있을 수 있습니다. 이 장치에 전원을 차단하기 위해서는 모든 연결 단자를 제거해야만 합니다.

Waarschuwing

Deze eenheid kan meer dan één stroomtoevoeraansluiting bevatten. Alle aansluitingen dienen verwijderd te worden om het apparaat stroomloos te maken.

Backplane Voltage



Warning! Hazardous voltage or energy is present on the backplane when the system is operating. Use caution when servicing.

バックプレーンの電圧

システムの稼働中は危険な電圧または電力が、バックプレーン上にかかっています。

修理する際には注意ください。

警告

当系统正在进行时，背板上有很危险的电压或能量，进行维修时务必小心。

警告

當系統正在進行時，背板上有危險的電壓或能量，進行維修時務必小心。

Warnung

Wenn das System in Betrieb ist, treten auf der Rückwandplatine gefährliche Spannungen oder Energien auf. Vorsicht bei der Wartung.

¡Advertencia!

Cuando el sistema está en funcionamiento, el voltaje del plano trasero es peligroso. Tenga cuidado cuando lo revise.

Attention

Lorsque le système est en fonctionnement, des tensions électriques circulent sur le fond de panier. Prendre des précautions lors de la maintenance.

מתח בפנל האחורי

אזהרה!

קיימת סכנת מתח בפנל האחורי בזמן תפעול המערכת. יש להיזהר במהלך העבודה.

هناك خطر مه التيار الكهزبائي أوالطاقة المجبدة على اللحة
عندما يكن النظام يعمل كه حذرا عند خدمة هذا الجهاس

경고!
시스템이 동작 중일 때 후면판 (Backplane)에는 위험한 전압이나 에너지가 발생 합니다. 서비스 작업 시 주의하십시오.

Waarschuwing
Een gevaarlijke spanning of energie is aanwezig op de backplane wanneer het systeem in gebruik is. Voorzichtigheid is geboden tijdens het onderhoud.

Comply with Local and National Electrical Codes



Warning! Installation of the equipment must comply with local and national electrical codes.

地方および国の電気規格に準拠

機器の取り付けはその地方および国の電気規格に準拠する必要があります。

警告
设备安装必须符合本地与本国电气法规。

警告
設備安裝必須符合本地與本國電氣法規。

Warnung
Die Installation der Geräte muss den Sicherheitsstandards entsprechen.

¡Advertencia!
La instalacion del equipo debe cumplir con las normas de electricidad locales y nacionales.

Attention
L'équipement doit être installé conformément aux normes électriques nationales et locales.

תיאום חוקי החשמל הארצי
אזהרה!
התקנת הציוד חייבת להיות תואמת לחוקי החשמל המקומיים והארציים.

تركيب المعدات الكهربائية يجب أن يمتثل للقاويه المحلية والبطية المتعلقة
بالكهرباء

경고!
현 지역 및 국가의 전기 규정에 따라 장비를 설치해야 합니다.

Waarschuwing
Bij installatie van de apparatuur moet worden voldaan aan de lokale en nationale elektriciteitsvoorschriften.

Product Disposal



Warning! Ultimate disposal of this product should be handled according to all national laws and regulations.

製品の廃棄
この製品を廃棄処分する場合、国の関係する全ての法律・条例に従い処理する必要があります。

警告
本产品的废弃处理应根据所有国家的法律和规章进行。

警告
本產品的廢棄處理應根據所有國家的法律和規章進行。

Warnung
Die Entsorgung dieses Produkts sollte gemäß allen Bestimmungen und Gesetzen des Landes erfolgen.

¡Advertencia!
Al deshacerse por completo de este producto debe seguir todas las leyes y reglamentos nacionales.

Attention

La mise au rebut ou le recyclage de ce produit sont généralement soumis à des lois et/ou directives de respect de l'environnement. Renseignez-vous auprès de l'organisme compétent.

סילוק המוצר

אזהרה!

סילוק סופי של מוצר זה חייב להיות בהתאם להנחיות וחוקי המדינה.

التخلص النهائي من هذا المنتج ينبغي التعامل معه وفقا لجميع القانين واللائح البطنية عند

경고!

이 제품은 해당 국가의 관련 법규 및 규정에 따라 폐기되어야 합니다.

Waarschuwing

De uiteindelijke verwijdering van dit product dient te geschieden in overeenstemming met alle nationale wetten en reglementen.

Hot Swap Fan Warning



Warning! Hazardous moving parts. Keep away from moving fan blades. The fans might still be turning when you remove the fan assembly from the chassis. Keep fingers, screwdrivers, and other objects away from the openings in the fan assembly's housing.

ファン・ホットスワップの警告

警告!回転部品に注意。運転中は回転部(羽根)に触れないでください。シャーシから冷却ファン装置を取り外した際、ファンがまだ回転している可能性があります。ファンの開口部に、指、ドライバー、およびその他のものを近づけないで下さい。

警告!

警告！危险的可移动性零件。请务必与转动的风扇叶片保持距离。 当您从机架移除风扇装置，风扇可能仍在转动。小心不要将手指、螺丝起子和其他物品太靠近风扇

警告

危險的可移動性零件。請務必與轉動的風扇葉片保持距離。 當您從機架移除風扇裝置，風扇可能仍在轉動。小心不要將手指、螺絲起子和其他物品太靠近風扇。

Warnung

Gefährlich Bewegende Teile. Von den bewegenden Lüfterblätter fern halten. Die Lüfter drehen sich u. U. noch, wenn die Lüfterbaugruppe aus dem Chassis genommen wird. Halten Sie Finger, Schraubendreher und andere Gegenstände von den Öffnungen des Lüftergehäuses entfernt.

¡Advertencia!

Riesgo de piezas móviles. Mantener alejado de las aspas del ventilador. Los ventiladores podran dar vuelta cuando usted quite ell montaje del ventilador del chasis. Mandtenga los dedos, los destornilladores y todos los objetos lejos de las aberturas del ventilador

Attention

Pieces mobiles dangereuses. Se tenir a l'ecart des lames du ventilateur Il est possible que les ventilateurs soient toujours en rotation lorsque vous retirerez le bloc ventilateur du châssis. Prenez garde à ce que doigts, tournevis et autres objets soient éloignés du logement du bloc ventilateur.

אזהרה!

חלקים נעים מסוכנים. התרחק מלהבי המאוורר בפעולהכאשר מסירים את חלקי
המאוורר מהמארז, יתכן והמאוררים עדיין עובדים. יש להרחיק למרחק בטוח את
האצבעות וכלי עבודה שונים מהפתחים בתוך המאוורר

تحذير! أجزاء متحركة خطرة. ابتعد عن شفرات المروحة المتحركة.من الممكن أن
المراوح لا تزال تدورعند إزالة كتلة المروحة من الهيكل يجب إبقاء الأصابع
.ومفكات البراغي وغيرها من الأشياء بعيدا عن الفتحات في كتلة المروحة

경고!

움직이는 위험한 부품. 회전하는 송풍 날개에 접근하지 마세요. 섀시로부터 팬 조립품을 제거할 때 팬은 여전히 회전하고 있을 수 있습니다. 팬 조림품 외관의 열려있는 부분들로부터 손가락 및 스크류드라이버, 다른 물체들이 가까이 하지 않도록 배치해 주십시오.

Waarschuwing

Gevaarlijk bewegende onderdelen. Houd voldoende afstand tot de bewegende ventilatorbladen. Het is mogelijk dat de ventilator nog draait tijdens het verwijderen van het ventilatorsamenstel uit het chassis. Houd uw vingers, schroevendraaiers en eventuele andere voorwerpen uit de buurt van de openingen in de ventilatorbehuizing.

Power Cable and AC Adapter



Warning! When installing the product, use the provided or designated connection cables, power cables and AC adaptors. Using any other cables and adaptors could cause a malfunction or a fire. Electrical Appliance and Material Safety Law prohibits the use of UL or CSA -certified cables (that have UL/CSA shown on the cord) for any other electrical devices than products designated by Supermicro only.

電源コードとACアダプター

製品を設置する場合、提供または指定および購入された接続ケーブル、電源コードとACアダプターを 該当する地域の条例や安全基準に適合するコードサイズやプラグと共に使用下さい。他のケーブルやアダプタを使用すると故障や火災の原因になることがあります。

電気用品安全法は、ULまたはCSA認定のケーブル(UL/CSAマークがコードに表記)を Supermicroが指定する製品以外に使用することを禁止しています。

警告

安装此产品时,请使用本身提供的或指定的或采购的连接线,电源线和电源适配器，包含遵照当地法规和安全要求的合规的电源线尺寸和插头.使用其它线材或适配器可能会引起故障或火灾。除了Supermicro所指定的产品,电气用品和材料安全法律规定禁止
使用未经UL或CSA认证的线材。(线材上会显示UL/CSA符号)。

警告

安裝此產品時,請使用本身提供的或指定的或採購的連接線,電源線和電源適配器，包含遵照當地法規和安全要求的合規的電源線尺寸和插頭.使用其它線材或適配器可能會引起故障或火災。除了Supermicro所指定的產品,電氣用品和材料安全法律規定禁止
使用未經UL或CSA認證的線材。 (線材上會顯示UL/CSA符號)。

Warnung

Nutzen Sie beim Installieren des Produkts ausschließlich die von uns zur Verfügung gestellten Verbindungskabeln, Stromkabeln und/oder Adapater, die Ihre örtlichen Sicherheitsstandards einhalten. Der Gebrauch von anderen Kabeln und Adapter können Fehlfunktionen oder Feuer verursachen. Die Richtlinien untersagen das Nutzen von UL oder CAS zertifizierten Kabeln (mit UL/CSA gekennzeichnet), an Geräten oder Produkten die nicht mit Supermicro gekennzeichnet sind.

¡Advertencia!

Cuando instale el producto, utilice la conexión provista o designada o procure cables, Cables de alimentación y adaptadores de CA que cumplan con los códigos locales y los requisitos de seguridad, incluyendo el tamaño adecuado del cable y el enchufe. El uso de otros cables y adaptadores podría causar un mal funcionamiento o un incendio. La Ley de Seguridad de Aparatos Eléctricos y de Materiales prohíbe El uso de cables certificados por UL o CSA (que tienen el certificado UL / CSA en el código) para cualquier otros dispositivos eléctricos que los productos designados únicamente por Supermicro.

Attention

Lors de l'installation du produit, utilisez les cables de connection fournis ou désigné ou achetez des cables, cables de puissance et adaptateurs respectant les normes locales et les conditions de securite y compris les tailles de cables et les prises electriques appropries. L'utilisation d'autres cables et adaptateurs peut provoquer un dysfonctionnement ou un incendie. Appareils électroménagers et la Loi sur la Sécurité Matériel interdit l'utilisation de câbles certifies- UL ou CSA (qui ont UL ou CSA indiqué sur le code) pour tous les autres appareils électriques sauf les produits désignés par Supermicro seulement.

AC ימאתמו מיילמשח מילבכ

!הרהזא

ךרוצל ומאתוה וא ושכרנ רשא AC מימאתמו מיקפס ,מילבכב שמתשהל שי ,רצומה תא מיניקתמ רשאכ לכב שומיש . עקתהו לבכה לש הנוכנ הדימ ללוכ ,תוימוקמה תוחיטבה תושירדל ומאתוה רשאו ,הנקתהה למשחה יריש כמב שומישה יקוחל מאתהב .ילמשח רצק וא הלקתל מורגל לולע ,רחא גוסמ מאתמ וא לבכ לש דוק מהילע עיפומ רשאכ) CSA-ב וא UL -ב מיכמסומה מילבכב שמתשהל רוסיא מייק ,תוחיטבה יקוחו .דבלב Supermicro י"ע מאתוה רשא רצומב קר אלא ,רחא ילמשח רצומ לכ רובע UL/CSA)

تركيب المنتج، قم باستخدام التوصيلات المتوفرة أو المحددة أو قم بشراء الكابلات عند الكهربائية وحوالت التيار المتردد مع الالتزام بقوانين ومتطلبات السلامة المحلية بما في ذلك حجم الموصل والقابس السليم. استخدام أي كابلات وحوالت أخرى قد يتسبب في عطل أو حريق. CSA وأ UL لبق نم قبلم ةدمتعملا تاكبلكا مادختسا ةزهجألل ةيئابرهكلا تادعملاو ةددحملا وأ ةنيعملا جاتنملا ريغ ىرخأ تادعم يأ عم (UL/CSA) ةمالسلا نوناق رظحي Supermicro. لبق نم ةددحملا وأ ةنيعملا جاتنملا ريغ ىرخأ تادعم يأ عم (UL/CSA) ةمالسلا لمحت عالمة والتي

전원 케이블 및 AC 어댑터

경고! 제품을 설치할 때 현지 코드 및 적절한 굵기의 코드와 플러그를 포함한 안전 요구 사항을 준수하여 제공되거나 지정된 연결 혹은 구매 케이블, 전원 케이블 및 AC 어댑터를 사용하십시오.

다른 케이블이나 어댑터를 사용하면 오작동이나 화재가 발생할 수 있습니다. 전기 용품 안전법은 UL 또는 CSA 인증 케이블 (코드에 UL / CSA가 표시된 케이블)을 Supermicro 가 지정한 제품 이외의 전기 장치에 사용하는 것을 금지합니다.

Stroomkabel en AC-Adapter

Waarschuwing! Bij het aansluiten van het Product uitsluitend gebruik maken van de geleverde Kabels of een andere geschikte aan te schaffen Aansluitmethode, deze moet altijd voldoen aan de lokale voorschriften en veiligheidsnormen, inclusief de juiste kabeldikte en stekker. Het gebruik van niet geschikte Kabels en/of Adapters kan een storing of brand veroorzaken. Wetgeving voor Elektrische apparatuur en Materiaalveiligheid verbied het gebruik van UL of CSA -gecertificeerde Kabels (met UL/CSA in de code) voor elke andere toepassing dan de door Supermicro hiervoor beoogde Producten.

Appendix B

System Specifications

Processors

Dual 3rd Gen Intel Xeon Scalable processors in a P+ (LGA4189) socket with up to 40 cores and the thermal design power (TDP) of up to 270W
Note: Refer to the motherboard specifications pages on our website for updates to supported processors..

Chipset

Intel PCH C621A (LBG-R)

BIOS

AMI 64Mb SPI Flash ROM

Memory

Thirty-two slots DDR4 RDIMM/LRDIMM or Intel Optane PMem 200 Series, Up to 3200 MHz
(8TB for DDR4, or 8TB of PMem and 4TB DDR4)
Note: PMem 200 Series are supported on 3rd gen Intel Xeon Scalable Platinum, Gold and selected Silver processors.

Storage Drives

24 hot-swap: 22 SATA/SAS/NVMe hybrid + 2 SATA/SAS direct attached
Two SuperDOM (Disk on Module) headers

PCI Expansion Slots

Five PCIe 4.0 x8
One PCIe 4.0 x16
One PCIe 4.0 low-profile x16
One PCIe 4.0 low-profile, internal x8

Input/Output

Network: Two to four LAN ports, varies by Ultra Riser Card
BMC: Dedicated LAN port
USB: Two USB 3.0 ports
Video: One VGA port
COM: One serial port

Motherboard

X12DPU-6; 16.8" (W) x 17.00" (L) (426.72 mm x 431.80 mm)

Chassis

219U3TS-R1K62P-T; 2U Rackmount, (WxHxD) 17.2” x 3.5” x 28.2” (437 x 89 x 717.2mm)

System Cooling

Four 8-cm heavy-duty PWM fans, two CPU heatsinks, two air shrouds to direct air flow

Power Supply

Model: PWS-1K62A-1R, 1600W redundant modules, 80Plus Titanium level; Optional: 2000W
AC Input
100-127 Vac, 50-60 Hz
200-240 Vac, 50-60 Hz
+12V
83A (100 Vac–127 Vac)
133A (200 Vac–240 Vac)
+12 V standby: 2.1A

Operating Environment

Operating Temperature: 10º to 35º C (50º to 95º F)
Non-operating Temperature: -40º to 60º C (-40º to 140º F)
Operating Relative Humidity: 8% to 90% (non-condensing)
Non-operating Relative Humidity: 5% to 95% (non-condensing)

Regulatory Compliance

FCC, ICES, CE, UKCA, VCCI, RCM, NRTL, CB

Certified Safety Models

Compliant with UL and CSA: 219U-16, 219U-R16X12, 219U-R20X12, 219U-20, 219U-R13DX12, 219U-13D

Applied Directives, Standards

EMC/EMI: 2014/30/EU (EMC Directive)
Electromagnetic Compatibility Regulations 2016
FCC Part 15
ICES-003
VCCI-CISPR 32
AS/NZS CISPR 32
BS/EN55032
BS/EN55035
CISPR 32
CISPR 24/CISPR 35
BS/EN 61000-3-2
BS/EN 61000-3-3
BS/EN 61000-4-2
BS/EN 61000-4-3
BS/EN 61000-4-4
BS/EN 61000-4-5
BS/EN 61000-4-6
BS/EN 61000-4-8
BS/EN 61000-4-11

Environment:
2011/65/EU (RoHS Directive)
EC 1907/2006 (REACH)
2012/19/EU (WEEE Directive)
California Proposition 65

Product Safety: 2014/35/EU (LVD Directive)
UL/CSA 62368-1 (USA and Canada)
Electrical Equipment (Safety) Regulations 2016
IEC/BS/EN 62368-1

Perchlorate Warning

California Best Management Practices Regulations for Perchlorate Materials: This Perchlorate warning applies only to products containing CR (Manganese Dioxide) Lithium coin cells. “Perchlorate Material-special handling may apply. See www.dtsc.ca.gov/hazardouswaste/perchlorate”

この装置は、クラスＡ機器です。この装置を住宅環境で使用すると電波妨害を引き起こすことがあります。この場合には使用者が適切な対策を講ずるよう要求されることがあります。

VCCI－A

BSMI/RoHS

限用物質含有情況標示聲明書
Declaration of the Presence Condition of the Restricted Substances Marking

設備名稱：伺服器/ Server　型號（型式）：829U-R12X12
Equipment name　Type designation (Type)

(系列型號: 829U-R16X12, 829U-R20X12, 829U-12, 829U- 16 , 829U-20, SYS-620U-TNR, 219U-R12X12, 219U-R16X12, 219U-R20X12, 219U-12, 219U- 16, 219U-20, SYS-220U-TNR, SYS-220U-TNR-A5-TS29T, SYS-220U-TNR-A52-TS29T, SYS-220U-TNR-A53-TS29T, SYS-220U-TNR-A54-TS29T, M-700, WF-500-B)

單元Unit	限用物質及其化學符號 Restricted substances and its chemical symbols					
	鉛Lead (Pb)	汞Mercury (Hg)	鎘Cadmium (Cd)	六價鉻 Hexavalent chromium (Cr^{+6})	多溴聯苯 Polybrominated biphenyls (PBB)	多溴二苯醚 Polybrominated diphenyl ethers (PBDE)
機殼 (Chassis)	○	○	○	○	○	○
機殼風扇 (Chassis Fan)	-	○	○	○	○	○
線材 (Cable)	○	○	○	○	○	○
主機板 (Motherboard)	-	○	○	○	○	○
電源供應器 (Power Supply)	-	○	○	○	○	○
硬碟 (HDD, SSD)	-	○	○	○	○	○
電源背板 (PDB)	-	○	○	○	○	○
附加卡 (Add-on Card)	-	○	○	○	○	○

備考1.〝超出0.1 wt %〞及〝超出0.01 wt %〞係指限用物質之百分比含量超出百分比含量基準值。
Note 1：“Exceeding 0.1 wt %” and “exceeding 0.01 wt %” indicate that the percentage content of the restricted substance exceeds the reference percentage value of presence condition.

備考2.〝○〞係指該項限用物質之百分比含量未超出百分比含量基準值。
Note 2：“○” indicates that the percentage content of the restricted substance does not exceed the percentage of reference value of presence.

備考3.〝-〞係指該項限用物質為排除項目。
Note 3：The “–” indicates that the restricted substance corresponds to the exemption.

警告: 為避免電磁干擾, 本產品不應安裝或使用於住宅環境。

輸入額定:

PWS-1K22A-1R
100-127V~, 60-50Hz, 9.8-7A(X2)
200-240V~, 60-50Hz, 7.5-6A(X2)

PWS-1K62A-1R
100-127V~, 60-50Hz, 12-9A(X2)
200-240V~, 60-50Hz, 10-8A(X2)

PWS-2K08A-1R
100-127V~, 60-50Hz, 12-9A(X2)
200-240V~, 60-50Hz, 10-9.8A(X2)

*使用者不能任意拆除或替換內部配備

*報驗義務人之姓名或名稱：美超微電腦股份有限公司

*報驗義務人之地址：新北市中和區建一路 150 號 3 樓