A+ Server
AS -2124US-TNR
AS -2124US-TNRP

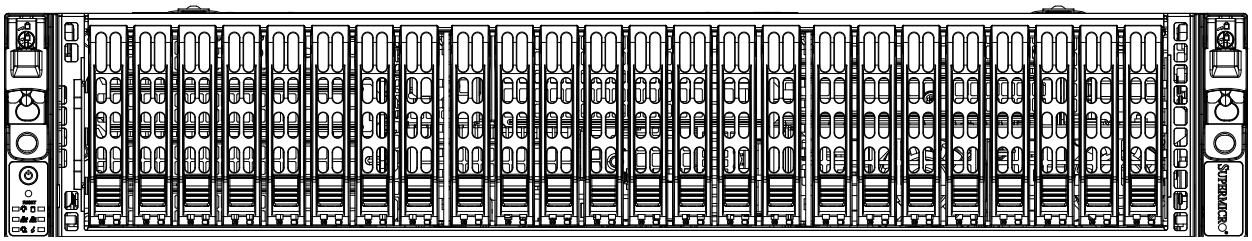

USER'S MANUAL

Revision 2.0a

The information in this User's Manual has been carefully reviewed and is believed to be accurate. The vendor assumes no responsibility for any inaccuracies that may be contained in this document, and makes no commitment to update or to keep current the information in this manual, or to notify any person or organization of the updates. Please Note: For the most up-to-date version of this manual, please see our website at www.supermicro.com.

Super Micro Computer, Inc. ("Supermicro") reserves the right to make changes to the product described in this manual at any time and without notice. This product, including software and documentation, is the property of Supermicro and/or its licensors, and is supplied only under a license. Any use or reproduction of this product is not allowed, except as expressly permitted by the terms of said license.

IN NO EVENT WILL Super Micro Computer, Inc. BE LIABLE FOR DIRECT, INDIRECT, SPECIAL, INCIDENTAL, SPECULATIVE OR CONSEQUENTIAL DAMAGES ARISING FROM THE USE OR INABILITY TO USE THIS PRODUCT OR DOCUMENTATION, EVEN IF ADVISED OF THE POSSIBILITY OF SUCH DAMAGES. IN PARTICULAR, SUPER MICRO COMPUTER, INC. SHALL NOT HAVE LIABILITY FOR ANY HARDWARE, SOFTWARE, OR DATA STORED OR USED WITH THE PRODUCT, INCLUDING THE COSTS OF REPAIRING, REPLACING, INTEGRATING, INSTALLING OR RECOVERING SUCH HARDWARE, SOFTWARE, OR DATA.

Any disputes arising between manufacturer and customer shall be governed by the laws of Santa Clara County in the State of California, USA. The State of California, County of Santa Clara shall be the exclusive venue for the resolution of any such disputes. Supermicro's total liability for all claims will not exceed the price paid for the hardware product.

FCC Statement: This equipment has been tested and found to comply with the limits for a Class A or Class B digital device pursuant to Part 15 of the FCC Rules. These limits are designed to provide reasonable protection against harmful interference when the equipment is operated in industrial environment for Class A device or in residential environment for Class B device. This equipment generates, uses, and can radiate radio frequency energy and, if not installed and used in accordance with the manufacturer's instruction manual, may cause harmful interference with radio communications. Operation of this equipment in a residential area is likely to cause harmful interference, in which case you will be required to correct the interference at your own expense.

California Best Management Practices Regulations for Perchlorate Materials: This Perchlorate warning applies only to products containing CR (Manganese Dioxide) Lithium coin cells. "Perchlorate Material-special handling may apply. See www.dtsc.ca.gov/hazardouswaste/perchlorate".



The products sold by Supermicro are not intended for and will not be used in life support systems, medical equipment, nuclear facilities or systems, aircraft, aircraft devices, aircraft/emergency communication devices or other critical systems whose failure to perform be reasonably expected to result in significant injury or loss of life or catastrophic property damage. Accordingly, Supermicro disclaims any and all liability, and should buyer use or sell such products for use in such ultra-hazardous applications, it does so entirely at its own risk. Furthermore, buyer agrees to fully indemnify, defend and hold Supermicro harmless for and against any and all claims, demands, actions, litigation, and proceedings of any kind arising out of or related to such ultra-hazardous use or sale.

Manual Revision 2.0a

Release Date: May 19, 2023 mk

Unless you request and receive written permission from Super Micro Computer, Inc., you may not copy any part of this document. Information in this document is subject to change without notice. Other products and companies referred to herein are trademarks or registered trademarks of their respective companies or mark holders.

Copyright © 2023 by Super Micro Computer, Inc.
All rights reserved.
Printed in the United States of America

Preface

About this Manual

This manual is written for professional system integrators and PC technicians. It provides information for the installation and use of the A+ Server . Installation and maintenance should be performed by experienced technicians only.

Please refer to the AS -2124US-TNR/TNRP server specifications page on our website for updates on supported memory, processors and operating systems (https://www.supermicro.com).

Notes

For your system to work properly, please follow the links below to download all necessary drivers/utilities and the user's manual for your server.

- Supermicro product manuals: https://www.supermicro.com/support/manuals/
- Product drivers and utilities: https://www.supermicro.com/wdl/driver/AMD/SP3/
- Product safety info: https://www.supermicro.com/about/policies/safety_information.cfm

If you have any questions, please contact our support team at:
support@supermicro.com

This manual may be periodically updated without notice. Please check the Supermicro website for possible updates to the manual revision level.

Secure Data Deletion

A secure data deletion tool designed to fully erase all data from storage devices can be found on our website: https://www.supermicro.com/about/policies/disclaimer.cfm?url=/wdl/utility/Lot9_Secure_Data_Deletion_Utility/

Warnings

Special attention should be given to the following symbols used in this manual.



Warning! Indicates important information given to prevent equipment/property damage or personal injury.



Warning! Indicates high voltage may be encountered when performing a procedure.

Contents

Chapter 1 Introduction

1.1 Overview....8
1.2 Unpacking the System....8
1.3 System Features....9
1.4 Chassis Features....10
Control Panel....10
Chassis Front....11
Chassis Rear....12
1.5 Motherboard Layout....13
Quick Reference....14
System Block Diagram....15
1.6 Where to Get Replacement Components....15
1.7 Returning Merchandise for Service....15

Chapter 2 Server Installation

2.1 Overview....17
2.2 Preparing for Setup....17
Choosing a Setup Location....17
Rack Precautions....17
Server Precautions....18
Rack Mounting Considerations....18
Ambient Operating Temperature....18
Airflow....18
Mechanical Loading....18
Circuit Overloading....19
Reliable Ground....19
2.3 Installing the Rails....20
Overview of the Rack Rails....20
Releasing the Inner Rail....21
Installing the Inner Rails....22
Installing the Outer Rails onto the Rack....23
2.4 Installing the Server into a Rack....24
Removing the Chassis from the Rack....25

Chapter 3 Maintenance and Component Installation

3.1 Removing Power 26
3.2 Accessing the System 27
3.3 Motherboard Components 28
Processor and Heatsink Installation 28
Memory Installation 35
Memory Support 35
Memory Population Guidelines 36
Installing Memory 38
Motherboard Battery 39
3.4 Chassis Components 40
Storage Drives 40
Drive Carrier Indicators 40
Cabling for NVMe 43
Hot-Swap for NVMe Drives 46
Checking the Temperature of an NVMe Drive 47
System Cooling 48
Fans 48
Installing the Air Shrouds 49
Checking the Server Air Flow 50
Overheating 50
Power Supply 51
Power Supply LEDs 51
PCIe Expansion Cards 53
Installing Full Height Expansion Cards 54
Removing the Ultra Riser Card 55

Chapter 4 Motherboard Connections

4.1 Power Connections 56
4.2 Headers and Connectors 57
Control Panel 59
4.3 Ports 62
4.4 Jumpers 63
Explanation of Jumpers 63
4.5 LED Indicators 65

Chapter 5 Software

5.1 Microsoft Windows OS Installation....66

5.2 Driver Installation....68

5.3 SuperDoctor® 5....69

5.4 BMC....70

BMC ADMIN User Password....70

Chapter 6 UEFI BIOS

6.1 Introduction....71

Starting BIOS Setup Utility....71

6.2 Main Setup....71

6.3 Advanced Setup Configurations....73

6.4 IPMI....89

6.5 Event Logs....92

6.6 Security....94

6.7 Boot....99

6.8 Save & Exit....100

6.9 BIOS Update Using IPMI....102

6.10 UEFI BIOS Recovery....104

Overview....104

Recovering the UEFI BIOS Image....104

Recovering the BIOS Block with a USB Device....104

Appendix A Standardized Warning Statements for AC Systems

Appendix B System Specifications

Appendix C IPMI Crash Dump

Contacting Supermicro

Headquarters

Address:	Super Micro Computer, Inc. 980 Rock Ave. San Jose, CA 95131 U.S.A.
Tel:	+1 (408) 503-8000
Fax:	+1 (408) 503-8008
Email:	marketing@supermicro.com (General Information) Sales-USA@supermicro.com (Sales Inquiries) Government_Sales-USA@supermicro.com (Gov. Sales Inquiries) support@supermicro.com (Technical Support) RMA@supermicro.com (RMA Support) Webmaster@supermicro.com (Webmaster)
Website:	www.supermicro.com

Europe

Address:	Super Micro Computer B.V. Het Sterrenbeeld 28, 5215 ML 's-Hertogenbosch, The Netherlands
Tel:	+31 (0) 73-6400390
Fax:	+31 (0) 73-6416525
Email:	Sales_Europe@supermicro.com (Sales Inquiries) Support_Europe@supermicro.com (Technical Support) RMA_Europe@supermicro.com (RMA Support)
Website:	www.supermicro.nl

Asia-Pacific

Address:	Super Micro Computer, Inc. 3F, No. 150, Jian 1st Rd. Zhonghe Dist., New Taipei City 235 Taiwan (R.O.C)
Tel:	+886-(2) 8226-3990
Fax:	+886-(2) 8226-3992
Email:	Sales-Asia@supermicro.com.tw (Sales Inquiries) Support@supermicro.com.tw (Technical Support) RMA@supermicro.com.tw (RMA Support)
Website:	www.supermicro.com.tw

Chapter 1

Introduction

1.1 Overview

The Supermicro AS -2124US-TNR/TNRP A+ is a high-end enterprise server well suited for virtualization and Cloud Computing with flexible networking options. It is based on the H12DSU-iN motherboard and the CSE-219U2TS-R1K62P3-TN24 chassis. This chapter provides a brief outline of the functions and features.

In addition to the motherboard and chassis, several important parts are listed below.

Main Parts List		
Description	**Part Number**	**Quantity**
Power supply modules	PWS-1K62A-1R	2
Backplane	BPN-NVMe4-216N-S24	1
LAN	see Ultra Riser card options on following pages	1
Add-on cards (These add-on cards will be optional if the 24 SAS kit is installed)	AOC-SLG4-2E4T AOC-SLG4-4E4T	2 3
Fans	FAN-0206L4	4
Air shrouds	MCP-310-82926-0B MCP-310-21917-0B	1 each
Heatsinks	SNK-P0063P	2
Riser cards	RSC-WR-6 RSC-W2-66G4	1 each
Rack mount rails	MCP-290-00053-0N	1 set

Note: The following safety models associated with the AS -2124US-TNR/TNRP servers have been certified as compliant with UL/CSA: 219U2-16, 219U-16, 219U2-R16H12.

1.2 Unpacking the System

Inspect the box the system was shipped in and note if it was damaged in any way. If any equipment appears damaged, please file a damage claim with the carrier who delivered it.

Decide on a suitable location for the rack unit that will hold the server. It should be situated in a clean, dust-free area that is well ventilated. Avoid areas where heat, electrical noise and electromagnetic fields are generated. It will also require a grounded AC power outlet nearby. Be sure to read the precautions and considerations noted in Appendix A.

1.3 System Features

The following is an overview of the main features.

System Features
Motherboard
H12DSU-iN
Chassis
CSE-219U2TS-R1K62P3-TN24
CPU
Dual AMD EPYC 7003/7002 series in SP3 sockets (7003 Series Processor drop-in support requires BIOS version 2.0 or newer)
Chipset
System on Chip
Memory
Up to 8 TB of ECC DDR4 3200 MT/s speed, RDIMM/LRDIMM/3DS/NVDIMM memory in 32 slots
Storage Drives
Twenty-four hot-swap 2.5" U.2 NVMe drive bays; all can support SAS/SATA with an optional SAS kit (for more details see the Supermicro web site >2124US-TNRP > optional parts list) M.2 SSDs can be added with optional add-on cards, two M.2s per card
Expansion Slots
One double-width, full-height, full-length PCIe 4.0 x16 slot Additional PCIe slots may be available if using the 24 SAS Kit solution (Contact Supermicro for more information)
Cooling
Four mid-chassis 8-cm heavy duty fans; two air shrouds, two CPU heatsinks
Power
1600W redundant 80 Plus Titanium level modules (Full redundancy based on configuration and application load)
Input/Output
LAN: Network ports by means of the Ultra Riser card; one dedicated BMC port USB 3.0: Two ports on the rear I/O panel (USB0/1) One type A header (Internal) Two SATA DOM (Device on Module) power connectors One COM port One VGA port
Form Factor
2U rackmount, (WxHxD) 17.2 x 3.5 x 27.8 in. (437 x 86 x 705 mm)

Ultra Riser Card Options

Ultra Riser cards provide network connections and other capabilities. An Ultra Riser card is required to be installed on this system for proper functionality.

Ultra Riser Card Options			
Model	**LAN Ports**	**Part Number**	**Description**
AS -2124US-TNR	No NIC	AOC-2UR668G4	Two PCIe 4.0 x16 and one PCIe 4.0 x8 (Internal, in x16)
	Two 25GbE	AOC-2UR68G4-M2TS	Two SFP28, Mellanox ConnectX-6, one PCIe 4.0 x8 (in x16), one PCIe 4.0 x16, and one PCIe 4.0 x8 (Internal, in x16)
AS -2124US-TNRP	Two 10GBaseT and two 10G SFP+	AOC-2UR68G4-I4XTS	Two RJ45, Two SFP+, Intel Carlsville X710-AT2, one PCIe 4.0 x8 (in x16), one PCIe 4.0 x16, and one PCIe 4.0 x8 (Internal, in x16)

1.4 Chassis Features

Control Panel

Power switches and status LEDs are located on the control panel on the front of the chassis.

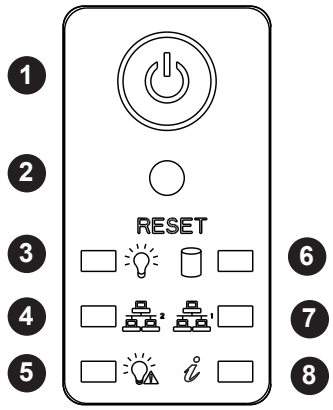

Figure 1-1. Control Panel

Control Panel Features		
Item	**Features**	**Description**
1	Power button	The main power switch applies or removes primary power from the power supply to the server but maintains standby power.
2	Reset	Reboots the system.
3	Power LED	Indicates power is being supplied to the system power supply units. This LED is illuminated when the system is operating normally.
4	NIC2 LED	Indicates network activity on the LAN2 port when flashing.
5	Power Fail LED	Indicates a power supply module has failed.
6	HDD	Indicates activity on the hard drive when flashing
7	NIC1 LED	Indicates network activity on the LAN1 port when flashing.
8	Information LED	Alerts operator to several states, as noted in the table below

Information LED	
Status	**Description**
Continuously on and red	An overheat condition has occurred. (This may be caused by cable congestion.)
Blinking red (1Hz)	Fan failure, check for an inoperative fan.
Blinking red (0.25Hz)	Power failure, check for a non-operational power supply.
Solid blue	UID has been activated locally to locate the server in a rack environment.
Blinking blue	UID has been activated using IPMI to locate the server in a rack environment.

Chassis Front

The illustration below shows the features included on the front of the chassis. Externally accessible hard drive carriers display status lights.

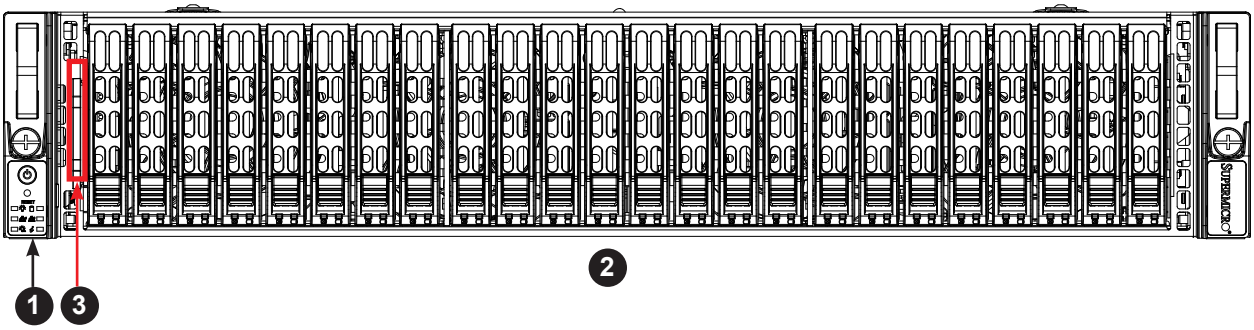

Figure 1-2. Front View

Chassis Front Features		
Item	**Features**	**Description**
1	Control Panel	Power buttons and status indicators; see previous page
2	Storage Drives	Twenty-four 2.5" drive bays; see the "Storage Drive" section in Section 3.4 for details
3	Service/Asset Tag	Pull-out identifier (with BMC ADMIN default password sticker)

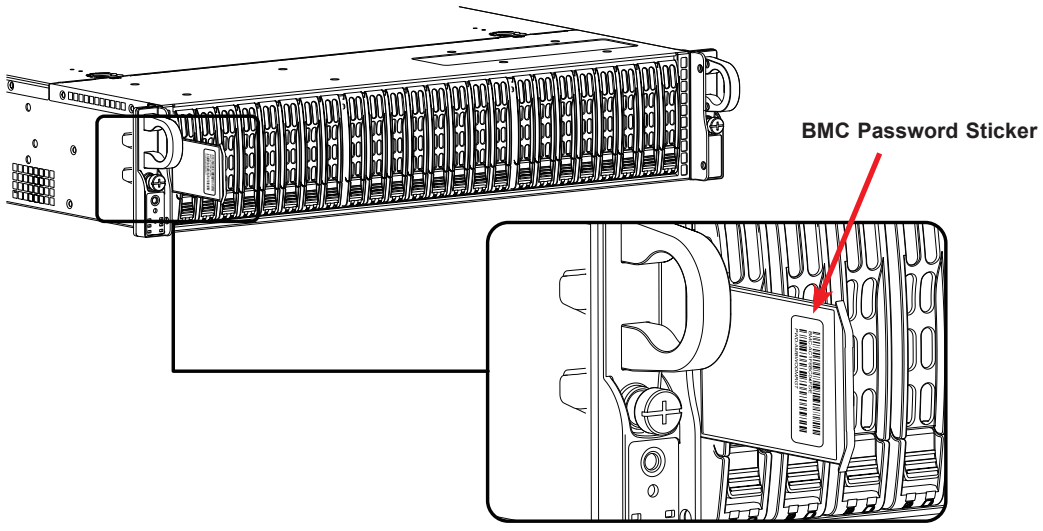

Figure 1-3. Location of the BMC Password Label

Chassis Rear

The illustration below shows the features included on the rear of the chassis. Power supply modules display status lights.

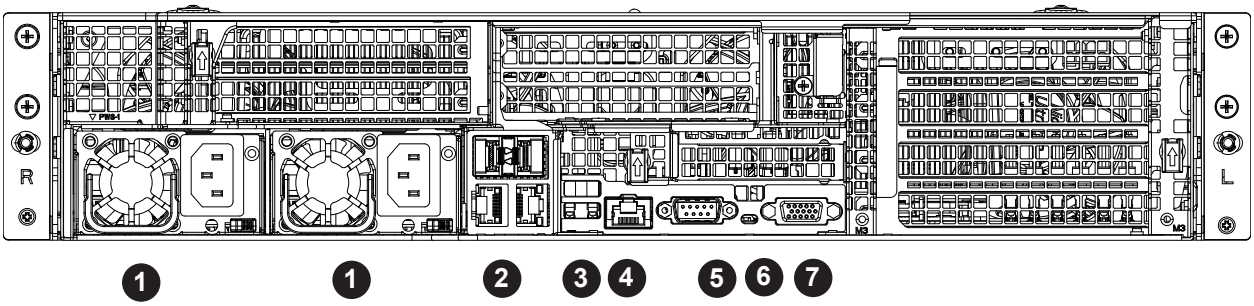

Figure 1-4. Rear View

Chassis Rear Features		
Item	**Features**	**Description**
1	Power Supply	Two redundant power supply modules
2	LAN	Zero, two, or four network ports, depending on the Ultra Riser card
3	USB	Two USB 3.0 ports
4	BMC LAN	Dedicated LAN port for the BMC
5	VGA	Video connector
6	UID LED	Unit ID button and indicator light
7	COM port	Serial connector

For information on expansion cards, see Chapter 3.

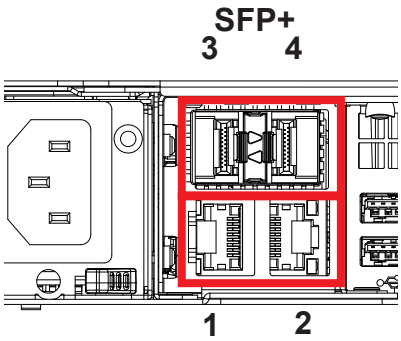

Figure 1-5. LAN Numbering (Reference only)

1.5 Motherboard Layout

Below is a layout of the H12DSU-iN motherboard with jumper, connector and LED locations shown. See the table on the following page for descriptions. For detailed descriptions, pinout information and jumper settings, refer to Chapter 4.

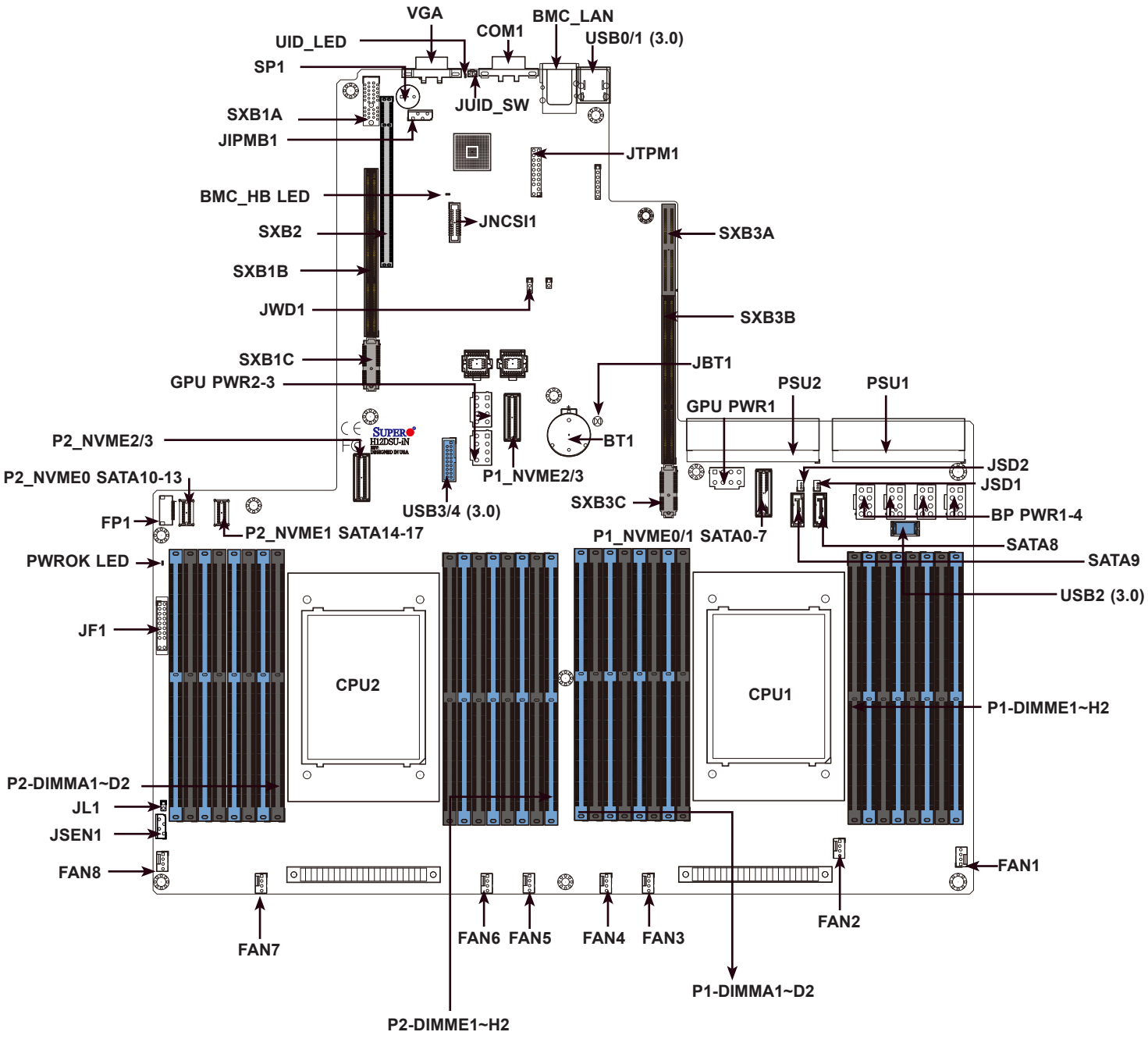

Figure 1-6. Motherboard Layout

Quick Reference

Jumper	Description	Default Setting
JBT1	CMOS Clear	Open (Normal)
JWD1	Watch Dog	Pins 1-2 (Reset)

Connector	Description
JIPMB1	4-pin External I²C Header (for an IPMI card)
BT1	Onboard Battery
VGA	VGA Port
UID_SW	UID Switch
COM1	COM Port
BMC_LAN	LAN port to access the BMC
USB0/1 (3.0)	USB0/1 (3.0) Rear Side Connector
USB3/4 (3.0)	USB3/4 (3.0) Front Side Pin Header
USB2 (3.0)	USB2 (3.0) Type A Connector
FAN1~FAN8	4-pin System/CPU Fan Headers
JCPLD1	Complex-Programmable Logical Device (CPLD) header
FP1	Front Panel Connector
JF1	Front Control Panel Header 1
P1_NVME0/1 SATA0-7	Processor 1 NVMe Ports 0/1 / SATA 0~7
P1_NVME2/3	Processor 1 NVMe Ports 2/3
P2_NVME0/1 SATA10-17	Processor 2 NVMe Ports 0/1 / SATA 10~17
P2_NVME2/3	Processor 2 NVMe Ports 2/3
SATA8~9	SATA 3.0 Ports
JSD1-2	Disk-On-Module Power Connector
JNCSI1	NCSI
JL1	Chassis Intrusion Header
JSEN1	Inlet Sensor Header
GPU PWR1-3	12V 8-pin Power Connector for Riser Card GPU
BP PWR1-4	12V and 5V 8-pin Power Connector for Backplane
JTPM1	Trusted Platform Module/Port 80 Connector
PSU1/PSU2	Motherboard Main Power Supply Connector
SXB1A/1B/1C	WIO-L Riser Card Support (CPU2 PCIe 4.0 x32)
SXB2	WIO-R Riser Card Support (CPU2 PCIe 4.0 x16)
SXB3A/3B/3C	Ultra I/O Riser Card Support (CPU1 PCIe 4.0 x40)

LED	Description	State: Status
UID_LED	UID LED	Solid Blue: UID Switch On
BMC_HB LED	BMC Heartbeat LED	Green: Blinking (BMC normal) Green: Fast blinking (BMC initializing)
PWROK LED	Power LED	Solid Green: Power On

Motherboard Block Diagram

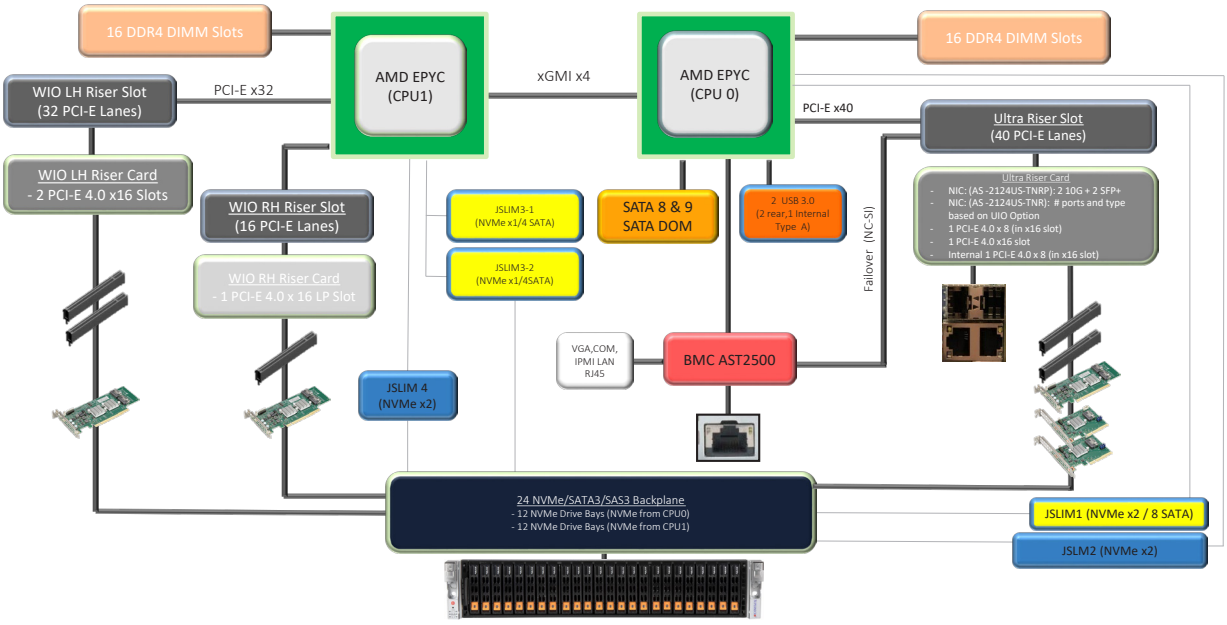

Figure 1-6. Motherboard Block Diagram

1.6 Where to Get Replacement Components

If you need replacement parts for your system, to ensure the highest level of professional service and technical support, purchase exclusively from our Supermicro Authorized Distributors/System Integrators/Resellers. A list can be found at: http://www.supermicro.com. Click the "Where to Buy" link.

1.7 Returning Merchandise for Service

A receipt or copy of your invoice marked with the date of purchase is required before any warranty service will be rendered. You can obtain service by calling your vendor for a Returned Merchandise Authorization (RMA) number. When returning to the manufacturer, the RMA number should be prominently displayed on the outside of the shipping carton, and mailed prepaid or hand-carried. Shipping and handling charges will be applied for all orders that must be mailed when service is complete.

For faster service, RMA authorizations may be requested online (http://www.supermicro.com/support/rma/).

Whenever possible, repack the chassis in the original Supermicro carton, using the original packaging material. If these are no longer available, be sure to pack the chassis securely, using packaging material to surround the chassis so that it does not shift within the carton and become damaged during shipping.

This warranty only covers normal consumer use and does not cover damages incurred in shipping or from failure due to the alteration, misuse, abuse or improper maintenance of products.

During the warranty period, contact your distributor first for any product problems.

Chapter 2

Server Installation

2.1 Overview

This chapter provides advice and instructions for mounting your system in a server rack. If your system is not already fully integrated with processors, system memory etc., refer to Chapter 4 for details on installing those specific components.

Caution: Electrostatic Discharge (ESD) can damage electronic components. To prevent such damage to PCBs (printed circuit boards), it is important to use a grounded wrist strap, handle all PCBs by their edges and keep them in anti-static bags when not in use.

2.2 Preparing for Setup

The box in which the system was shipped should include the rackmount hardware needed to install it into the rack. Please read this section in its entirety before you begin the installation.

Choosing a Setup Location

- The system should be situated in a clean, dust-free area that is well ventilated. Avoid areas where heat, electrical noise and electromagnetic fields are generated.
- Leave enough clearance in front of the rack so that you can open the front door completely (~25 inches) and approximately 30 inches of clearance in the back of the rack to allow sufficient space for airflow and access when servicing.
- This product should be installed only in a Restricted Access Location (dedicated equipment rooms, service closets, etc.).
- This product is not suitable for use with visual display workplace devices according to §2 of the German Ordinance for Work with Visual Display Units.

Rack Precautions

- Ensure that the leveling jacks on the bottom of the rack are extended to the floor so that the full weight of the rack rests on them.

- In single rack installations, stabilizers should be attached to the rack. In multiple rack installations, the racks should be coupled together.
- Always make sure the rack is stable before extending a server or other component from the rack.
- You should extend only one server or component at a time - extending two or more simultaneously may cause the rack to become unstable.

Server Precautions

- Review the electrical and general safety precautions in Appendix A.
- Determine the placement of each component in the rack *before* you install the rails.
- Install the heaviest server components at the bottom of the rack first and then work your way up.
- Use a regulating uninterruptible power supply (UPS) to protect the server from power surges and voltage spikes and to keep your system operating in case of a power failure.
- Allow any drives and power supply modules to cool before touching them.
- When not servicing, always keep the front door of the rack and all covers/panels on the servers closed to maintain proper cooling.

Rack Mounting Considerations

Ambient Operating Temperature

If installed in a closed or multi-unit rack assembly, the ambient operating temperature of the rack environment may be greater than the room's ambient temperature. Therefore, consideration should be given to installing the equipment in an environment compatible with the manufacturer’s maximum rated ambient temperature (TMRA).

Airflow

Equipment should be mounted into a rack so that the amount of airflow required for safe operation is not compromised.

Mechanical Loading

Equipment should be mounted into a rack so that a hazardous condition does not arise due to uneven mechanical loading.

Circuit Overloading

Consideration should be given to the connection of the equipment to the power supply circuitry and the effect that any possible overloading of circuits might have on overcurrent protection and power supply wiring. Appropriate consideration of equipment nameplate ratings should be used when addressing this concern.

Reliable Ground

A reliable ground must be maintained at all times. To ensure this, the rack itself should be grounded. Particular attention should be given to power supply connections other than the direct connections to the branch circuit (i.e. the use of power strips, etc.).



To prevent bodily injury when mounting or servicing this unit in a rack, you must take special precautions to ensure that the system remains stable. The following guidelines are provided to ensure your safety:

- This unit should be mounted at the bottom of the rack if it is the only unit in the rack.
- When mounting this unit in a partially filled rack, load the rack from the bottom to the top with the heaviest component at the bottom of the rack.
- If the rack is provided with stabilizing devices, install the stabilizers before mounting or servicing the unit in the rack.
- Slide rail mounted equipment is not to be used as a shelf or a work space.

2.3 Installing the Rails

This section provides information on installing the chassis into a rack unit with the rails provided. There are a variety of rack units on the market, which may mean that the assembly procedure will differ slightly from the instructions provided. You should also refer to the installation instructions that came with the rack unit you are using. **Note:** This rail will fit a rack between 26.8" and 36.4" deep.

Overview of the Rack Rails

The package includes two rail assemblies. Each is specifically designed for the left or right side of the chassis, and so marked. Each rail consists of two sections: a front section which secures to the front post of the rack and a rear section which adjusts in length and secures to the rear post of the rack.

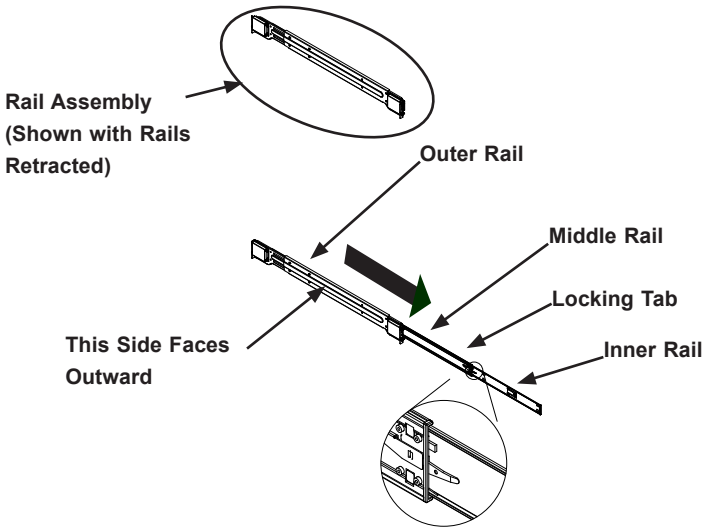

Figure 2-1. Identifying the Outer Rail, Middle Rail and Inner Rail
(Left Rail Assembly Shown)

Note: Both front chassis rails and the rack rails have a locking tab, which serves two functions. First, it locks the server into place when installed and pushed fully into the rack (its normal operating position. In addition, these tabs lock the server in place when fully extended from the rack. This prevents the server from coming completely out of the rack when pulled out for servicing.

Releasing the Inner Rail

Each inner rail has a locking latch. This latch prevents the server from coming completely out of the rack when when the chassis is pulled out for servicing.

To mount the rail onto the chassis, first release the inner rail from the outer rails.

1. Pull the inner rail out of the outer rail until it is fully extended as illustrated below.
2. Press the locking tab down to release the inner rail.
3. Pull the inner rail all the way out.

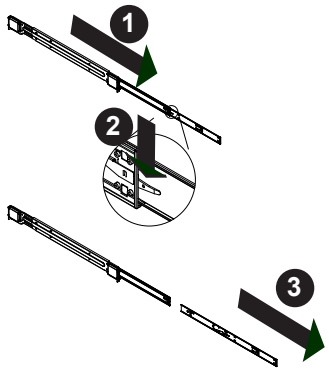

Figure 2-2. Extending and Releasing the Inner Rail

Installing the Inner Rails

Begin the rack mounting procedure by installing the inner rails to the chassis.

1. Identify the left and right inner rails. They are labeled.
2. Place the inner rail firmly against the side of the chassis, aligning the hooks on the side of the chassis with the holes in the inner rail.
3. Slide the inner rail forward toward the front of the chassis and under the hooks until the quick release bracket snaps into place, securing the rail to the chassis.
4. Optionally, you can further secure the inner rail to the chassis with a screw.

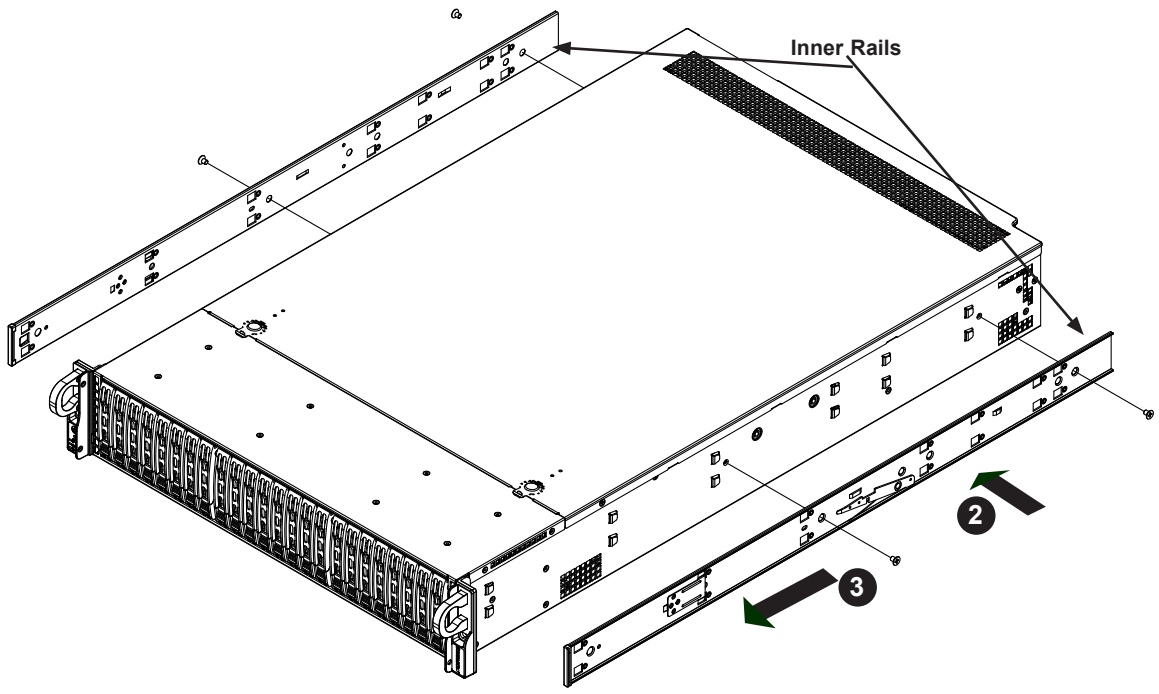

Figure 2-3. Installing the Rails

Warning: Do not pick up the server with the front handles. They are designed to pull the system from a rack only.

Installing the Outer Rails onto the Rack

1. Press upward on the locking tab at the rear end of the middle rail.
2. Push the middle rail back into the outer rail.
3. Hang the hooks on the front of the outer rail onto the square holes on the front of the rack. If desired, use screws to secure the outer rails to the rack.
4. Pull out the rear of the outer rail, adjusting the length until it just fits within the posts of the rack.
5. Hang the hooks of the rear section of the outer rail onto the square holes on the rear of the rack. Take care that the proper holes are used so the rails are level. If desired, use screws to secure the rear of the outer rail to the rear of the rack.

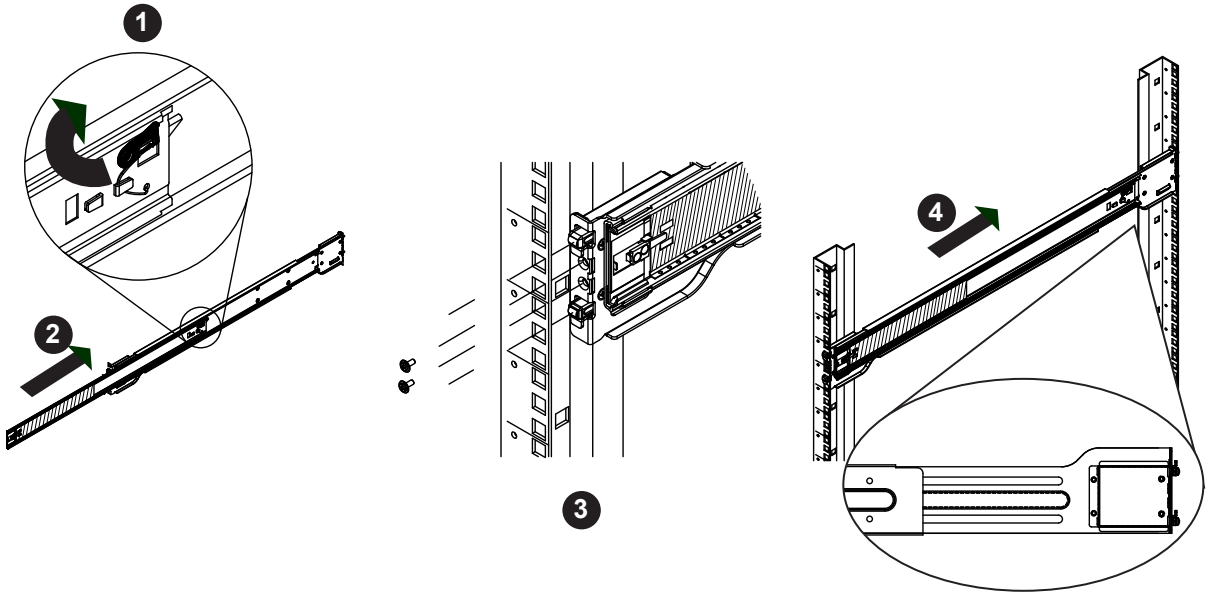

Figure 2-4. Installing the Outer Rails to the Rack

Note: Figure is for illustrative purposes only. Always install servers at the bottom of a rack first.

Stability hazard. The rack stabilizing mechanism must be in place, or the rack must be bolted to the floor before you slide the unit out for servicing. Failure to stabilize the rack can cause the rack to tip over.

2.4 Installing the Server into a Rack

Once rails are attached to the chassis and the rack, you can install the server.

Caution: Heavy! Use two or more people, or a lift to install the server.

1. Pull the middle rail out of the front of the outer rail and make sure that the ball bearing shuttle is locked at the front of the middle rail.
2. Align the rear of the chassis rails with the middle rails and then push evenly on both sides of the chassis until it clicks into the fully extended position.
3. Depress the locking tabs on both sides of the chassis and push the it fully into the rack. The locking tabs should "click".
4. Optional screws may be used to hold the front of the chassis to the rack.

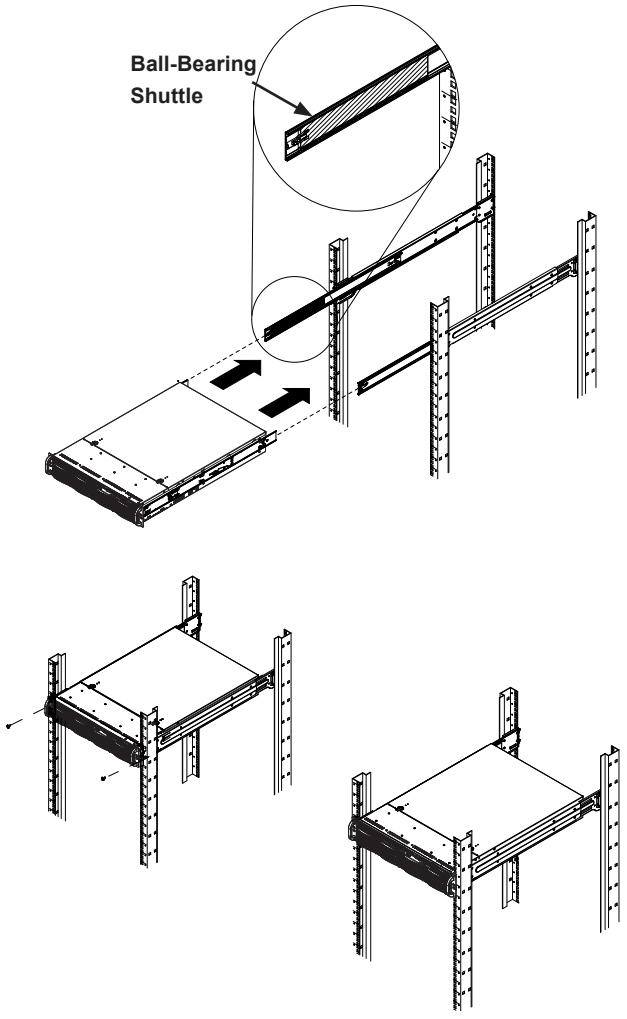

Figure 2-5. Installing the Server into the Rack

Note: Keep the ball bearing shuttle locked at the front of the middle rail during installation.

Note: Figure is for illustrative purposes only. Always install servers to the bottom of a rack first.

Removing the Chassis from the Rack

Caution! It is dangerous for a single person to off-load the heavy chassis from the rack without assistance. Be sure to have sufficient assistance supporting the chassis when removing it from the rack. Use a lift.

1. Pull the chassis forward out the front of the rack until it stops.
2. Press the release latches on each of the inner rails downward simultaneously and continue to pull the chassis forward and out of the rack.

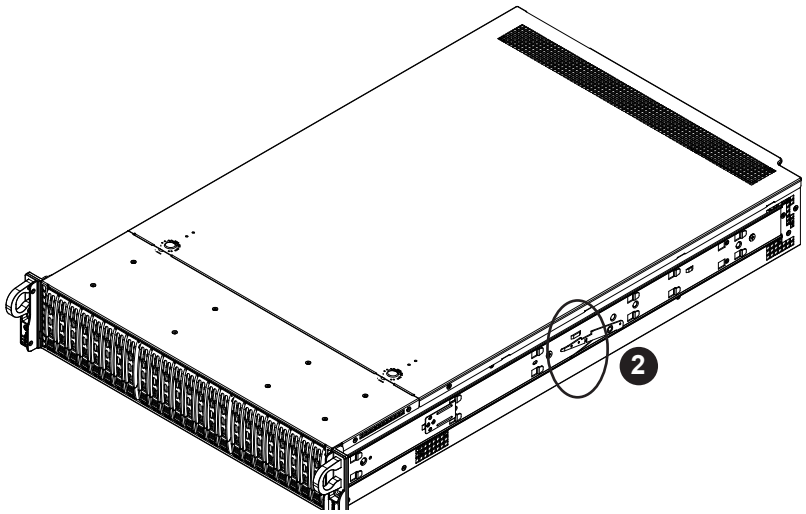

Figure 2-6. Removing the Chassis From the Rack

Chapter 3

Maintenance and Component Installation

This chapter provides instructions on installing and replacing main system components. To prevent compatibility issues, only use components that match the specifications and/or part numbers given.

Installation or replacement of most components require that power first be removed from the system. Please follow the procedures given in each section.

3.1 Removing Power

Use the following procedure to ensure that power has been removed from the system. This step is necessary when removing or installing non hot-swap components or when replacing a non-redundant power supply.

1. Use the operating system to power down the system.
2. After the system has completely shut-down, disconnect the AC power cord(s) from the power strip or outlet. (If your system has more than one power supply, remove the AC power cords from all power supply modules.)
3. Disconnect the power cord(s) from the power supply module(s).

3.2 Accessing the System

The CSE-219U chassis features a removable top cover that allows access to components. Check that all ventilation openings in the chassis are clear and unobstructed.

Removing the Top Cover

1. Remove the two screws on the side of the chassis that secures the cover to the chassis
2. Press the two release buttons and slide the cover toward the rear.
3. Lift the top cover up.

Caution: Except for short periods of time, do not operate the server without the cover in place. The chassis cover must be in place to allow for proper airflow and to prevent overheating.

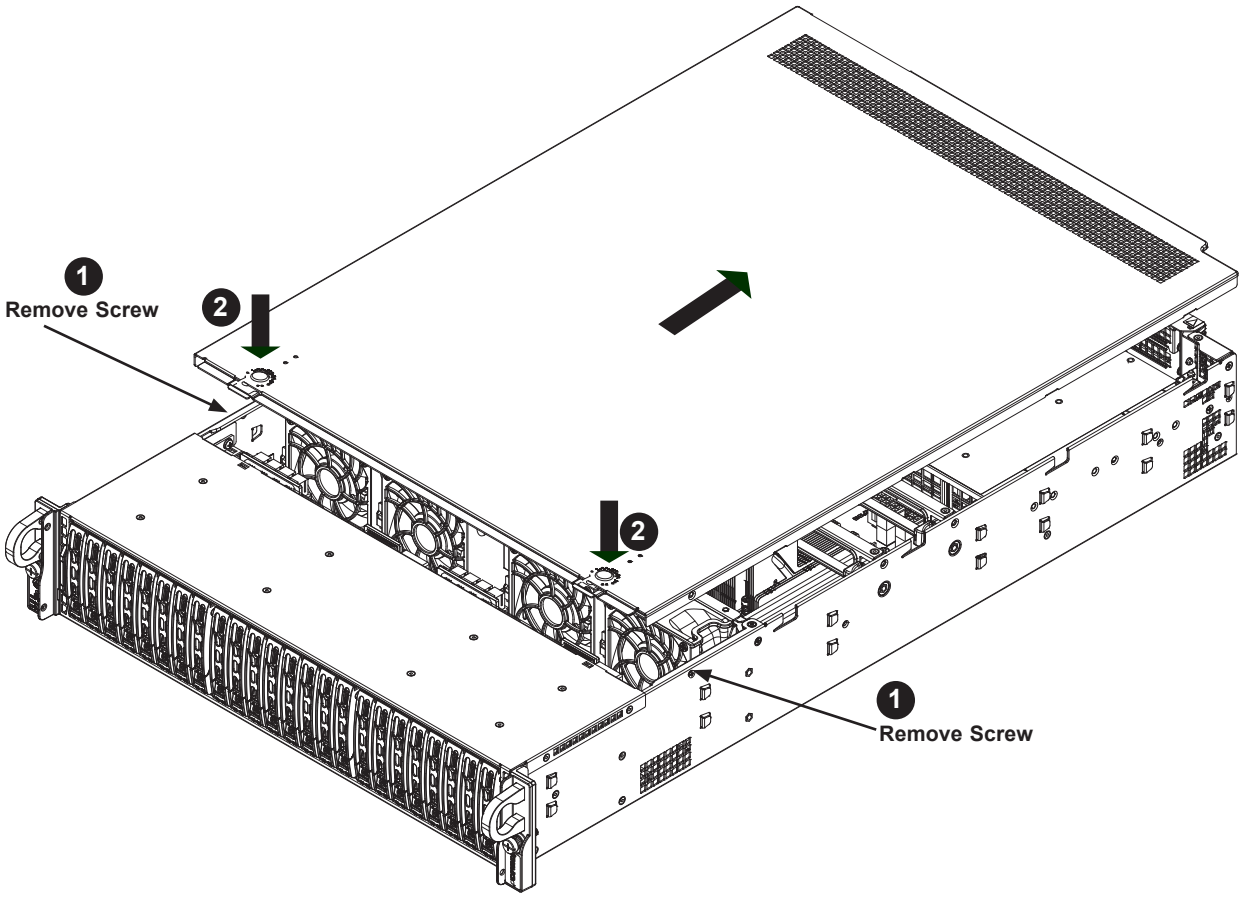

Figure 3-1. Removing the Chassis Cover

3.3 Motherboard Components

Processor and Heatsink Installation

Follow the procedures in this section to install a processor (CPU) and heatsink to the motherboard.

Notes:

- Use ESD protection.
- Power down the system as described in Section 3.1.
- The motherboard should be installed into the chassis first and the processor should be installed into the CPU socket before you install a CPU heatsink.
- If you bought a CPU separately, make sure to use a certified multi-directional heatsink only.
- When receiving a motherboard without a processor pre-installed, make sure that the plastic CPU socket cap is in place and none of the socket pins are bent; otherwise, contact your retailer immediately.
- Refer to the Supermicro website for updates on CPU support. All graphics in this manual are for illustration only. Your components may look different.

Installing the Processor and Heatsink

Begin by removing power from the system as described in Section 3.1.

1. Use a Torx T20 driver to loosen the screws holding down Force Frame in the sequence of 3-2-1. The screws are numbered on the Force Frame next to each screw hole. Tighten to 16.1 kgf-cm (14 lbf-in) of torque.

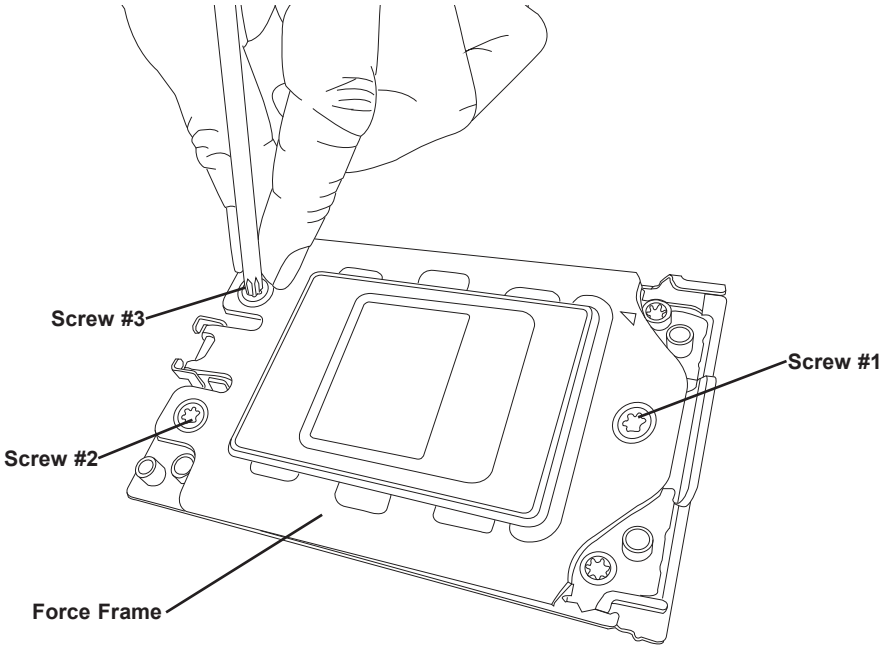

Figure 3-2. Removing the Processor Force Frame

2. The spring-loaded Force Frame will raise up after the last screw (#1) is removed. Gently allow it to lift up to its stopping position.

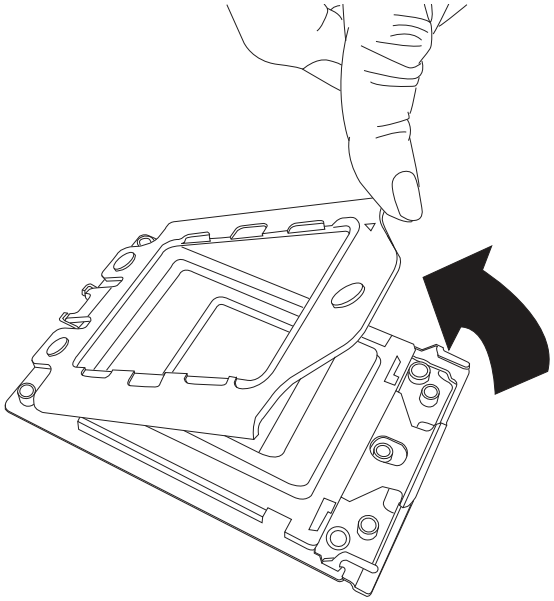

Figure 3-3. Raising the Force Frame

3. Lift the Rail Frame up by gripping the lift tabs near the front end of the rail frame. While keeping a secure grip of the Rail Frame, lift it to a position so you can do the next step of removing the External Cap.

Note: The Rail Frame is spring loaded, so keep a secure grip on it as you lift it so it does not snap up.

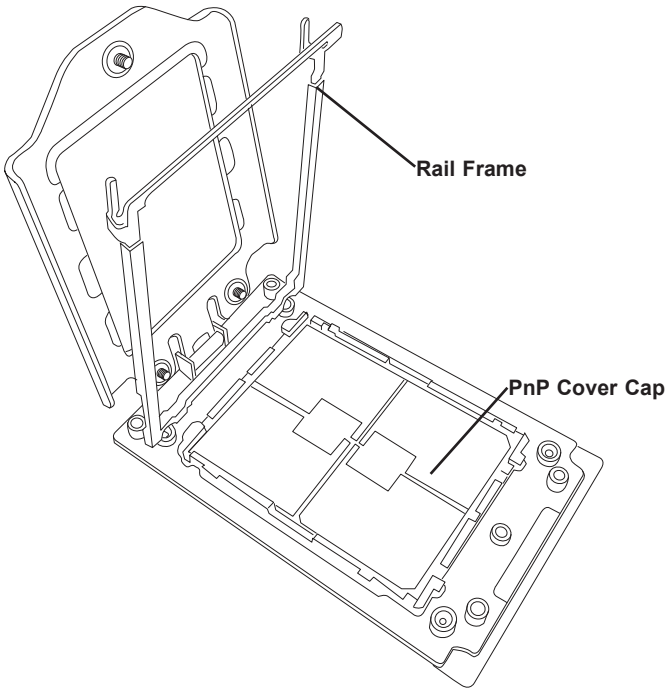

Figure 3-4. Lifting the Rail Frame

4. Remove the External Cap from the Rail Frame by pulling it upwards through the rail guides on the Rail Frame.

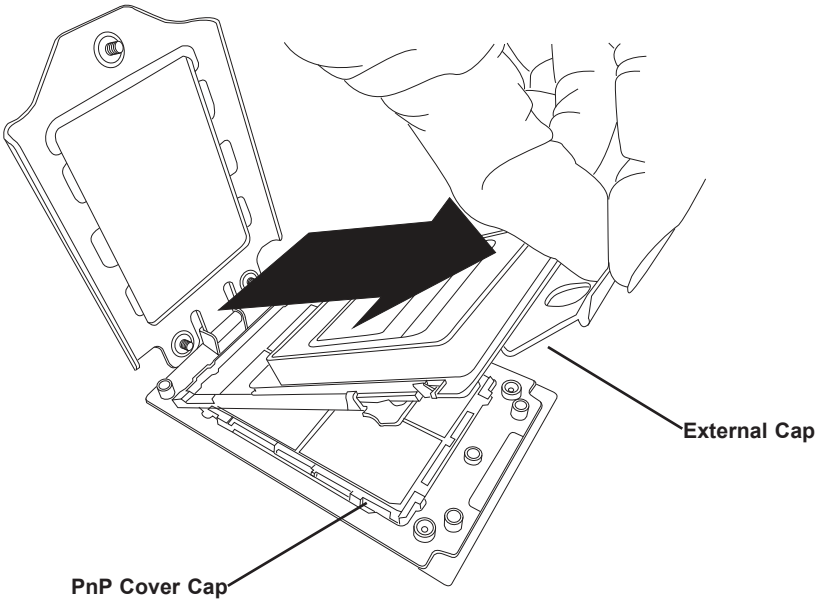

Figure 3-5. Removing the External Cap

5. The CPU Package is shipped from the factory with the blue Carrier Frame pre-assembled. Grip the handle of the Carrier Frame/CPU Package assembly from its shipping tray, and while gripping the handle, align the flanges of the Carrier Frame onto the rails of the Rail Frame so its pins will be at the bottom when the Rail Frame is lowered later.

6. Slide the Carrier Frame/CPU Package downwards to the bottom of the Rail Frame. Ensure the flanges are secure on the rails as you lower it downwards.

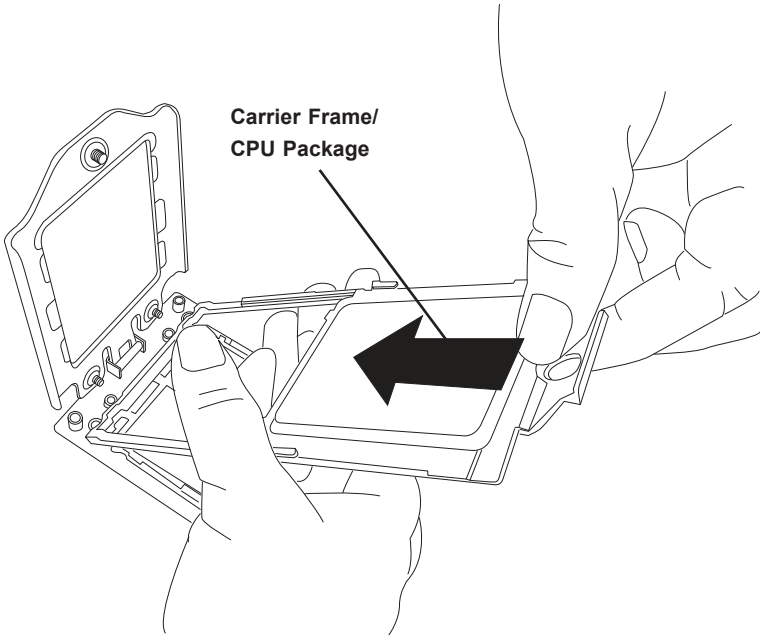

Figure 3-6. Inserting the Carrier Frame/CPU Package

Note: You can only install the CPU inside the socket in one direction with the handle at the top. Make sure that it is properly inserted into the CPU socket before closing the Rail Frame plate. If it doesn't close properly, do not force it as it may damage your CPU. Instead, open the Rail Frame plate again, and double-check that the CPU is aligned properly.

7. Lift up the Rail Frame till it securely rests in upright position. Then remove the PnP Cover Cap from the CPU socket below. Grip the two lift tabs marked "Remove" at the middle of the cap and pull vertically upwards to remove the PnP Cover Cap.

Caution: The exposed socket contacts are extremely vulnerable and can be damaged easily. Do not touch or drop objects onto the contacts and be careful removing the PnP Cover Cap and when placing the Rail Frame over the socket.

8. Gently lower the Rail Frame down onto the socket until the latches on the Rail Frame engage with the Socket housing. and it rests in place. Do not force it into place!

9. Gently lower the Force Frame down onto the Rail Frame and hold it in place until it is seated in the Socket housing. Note that the Force Frame is spring loaded and has to be held in place before it is secured.

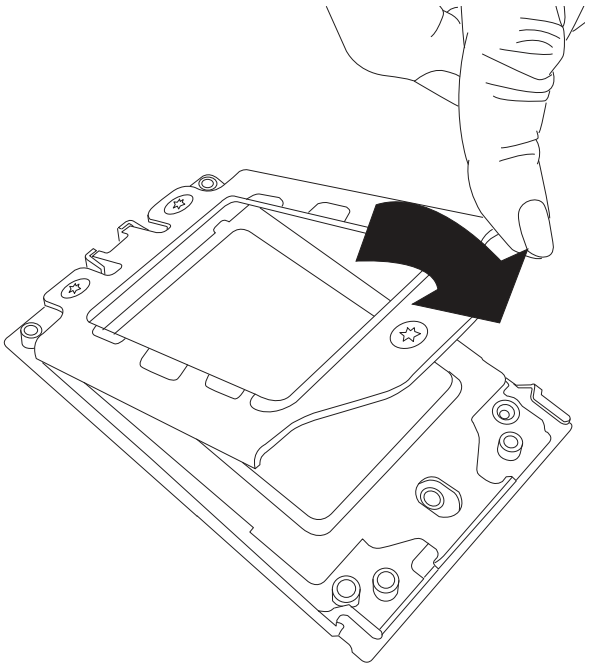

Figure 3-7. Lowering the Force Frame

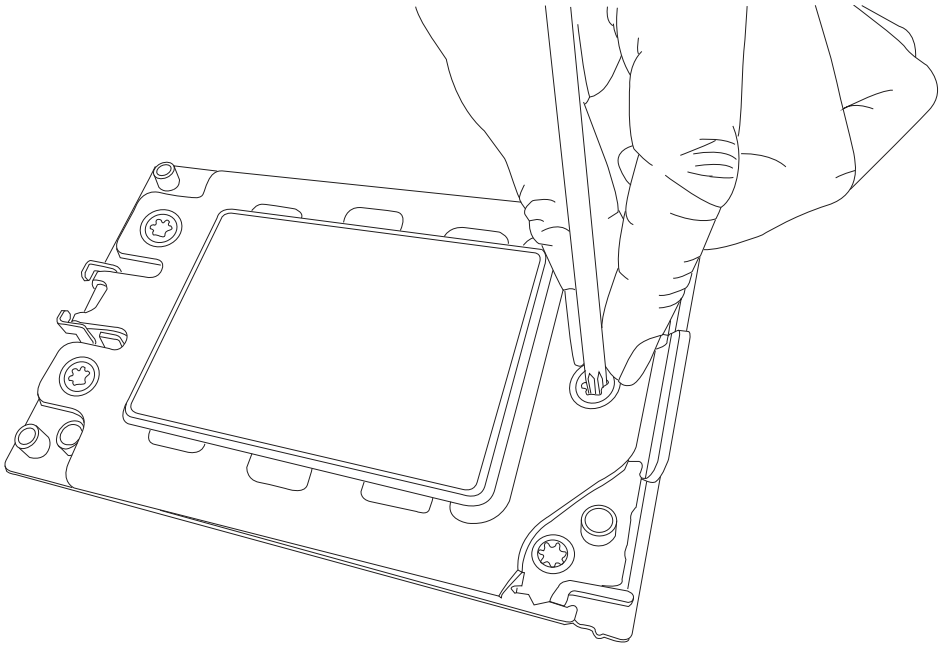

Figure 3-8. Securing the Force Frame

10. Replace the screws in the order 1-2-3, tightening to 16.1 kgf-cm (14 lbf-in) of torque. The Force Frame secures both the Rail Frame and CPU Package.

Caution: Tightening must be executed in proper 1-2-3 sequence to avoid causing catastrophic damage to the socket or CPU Package.

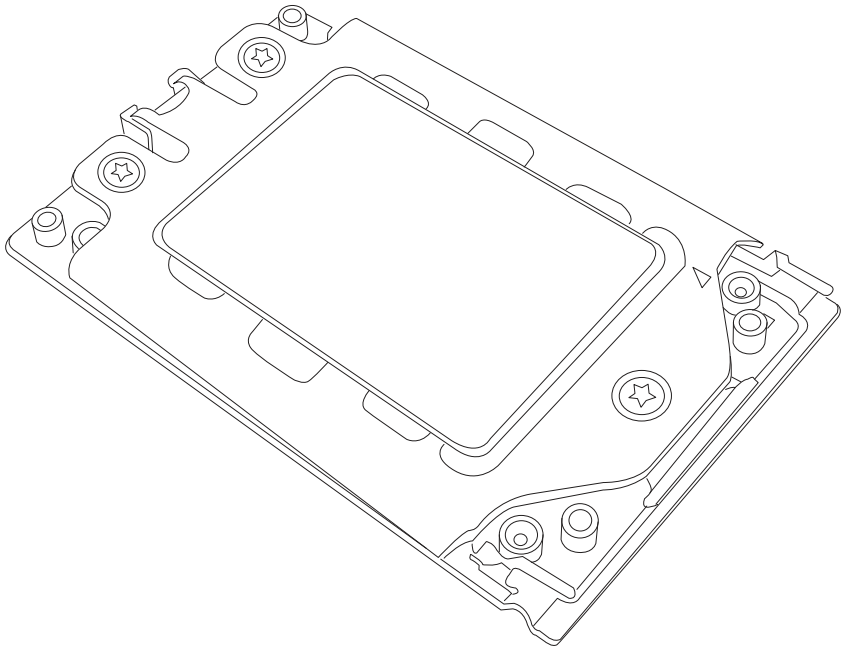

Figure 3-9. The Force Frame Secured

11. Lower the heatsink down till it rests securely on CPU Package over the four screw holes on the socket frame.

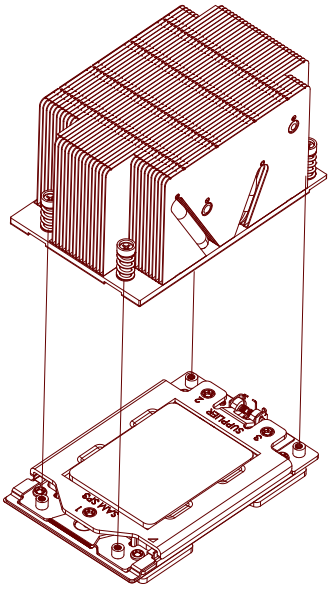

Figure 3-10. Mounting the Heatsink

12. Using a diagonal pattern and a Torx T20 driver, tighten the four heatsink screws evenly to 16.1 kgf-cm (14.0 lbf-in) of torque.

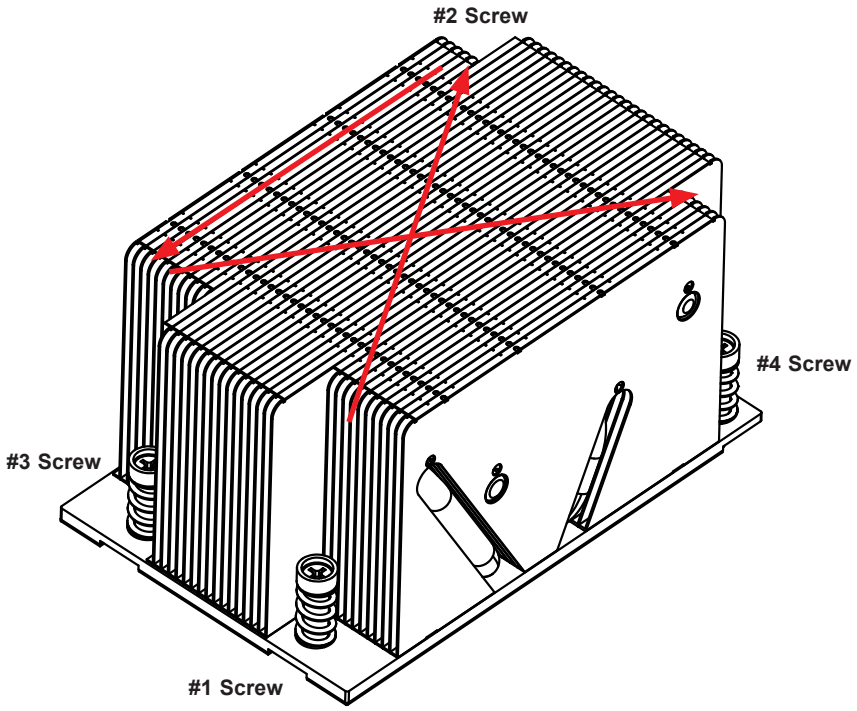

Figure 3-11. Securing the Heatsink

The processor and heatsink installation is complete. Repeat this procedure for any remaining CPU sockets on the motherboard.

Removing a Heatsink

We do not recommend removing the heatsink. If necessary, please follow the instructions below to prevent damage to the CPU or the CPU socket.

Note: Wait for the heatsink to cool down before removing it.

1. Unscrew and remove the heatsink screws from the motherboard in the sequence as show in the figure above.
2. Hold and gently pivot the heatsink back and forth to loosen it from the CPU. (Do not use excessive force when dislodging the heatsink.)
3. Once the heatsink is loose, remove it from the CPU.
4. Clean the surface of the CPU and the heatsink to get rid of the old thermal grease. Reapply the proper amount of thermal grease to the surface before you re-install the heatsink.

Memory Installation

Memory Support

The H12DSU-iN supports up to 8TB of ECC DDR4 3200 MHz speed, RDIMM/LRDIMM/3DS/NVDIMM memory in thirty-two slots. Check the Supermicro website for possible updates to memory support.

Processors and their Corresponding Memory Modules																
CPU#	**Channel 1**		**Channel 2**		**Channel 3**		**Channel 4**		**Channel 5**		**Channel 6**		**Channel 7**		**Channel 8**	
2 DIMMS (not recommended)																
CPU1						C2										
CPU2						C2										
4 DIMMS (not recommended)																
CPU1						C2		D2								
CPU2						C2		D2								
8 DIMMS (not recommended)																
CPU1						C2		D2						G2		H2
CPU2						C2		D2						G2		H2
12 DIMMS (for 7003 CPU only)																
CPU1		A2				C2		D2		E2				G2		H2
CPU2		A2				C2		D2		E2				G2		H2
16 DIMMS																
CPU1		A2		B2		C2		D2		E2		F2		G2		H2
CPU2		A2		B2		C2		D2		E2		F2		G2		H2
24 DIMMS (for 7003 CPU only)																
CPU1	A1	A2			C1	C2	D1	D2	E1	E2			G1	G2	H1	H2
CPU2	A1	A2			C1	C2	D1	D2	E1	E2			G1	G2	H1	H2
32 DIMMS																
CPU1	A1	A2	B1	B2	C1	C2	D1	D2	E1	E2	F1	F2	G1	G2	H1	H2
CPU2	A1	A2	B1	B2	C1	C2	D1	D2	E1	E2	F1	F2	G1	G2	H1	H2

Populating RDIMM/RDIMM 3DS/LRDIMM/LRDIMM 3DS DDR4 Memory Modules					
Type	DIMM Population		Maximum DIMM Capacity (GB)		Maximum Frequency (MHz)
	DIMM1	DIMM2	1 Channel	8 Channel	
RDIMM		1R	32GB	256GB	3200
	1R	1R	64GB	512GB	2933
		2R or 2DR	64GB	512GB	3200
	1R	2R or 2DR	96GB	768GB	2933
	2R or 2DR	2R or 2DR	128GB	1TB	2933
LRDIMM dual die package		4DR	128GB	1TB	3200
	4DR	4DR	256GB	2TB	2933
LRDIMM 3DS		2S2R	128GB	1TB	3200
		2S4R	256GB	2TB	3200
	2S2R	2S2R	256GB	2TB	2933
	2S2R	2S4R	384GB	3TB	2933
	2R4H	2R4H	256GB	2TB	1866
3DS RDIMM		2S2R	128GB	1TB	2933
	2S2R	2S2R	256GB	2TB	2666
		2S4R	256GB	2TB	2933
	2S2R	2S4R	384GB	3TB	2666
	2S4R	2S4R	512GB	4TB	2666

Memory Population Guidelines

- All DIMMs must be DDR4.
- Balance memory. Using unbalanced memory topology, such as populating two DIMMs in one channel while populating one DIMM in another channel, reduces performance. It is not recommended for Supermicro systems.
- In single-CPU configurations, memory must be installed in the DIMM slots associated with the installed CPU.
- For MM, NM/FM ratio is between 1:4 and 1:16. The capacity not used for FM can be used for AD. (NM = Near Memory; FM = Far Memory).
- Populating slots with a pair of DIMM modules of the same type and size results in interleaved memory, which improves memory performance.
- Use memory modules of the same type and speed, as mixing is not allowed.

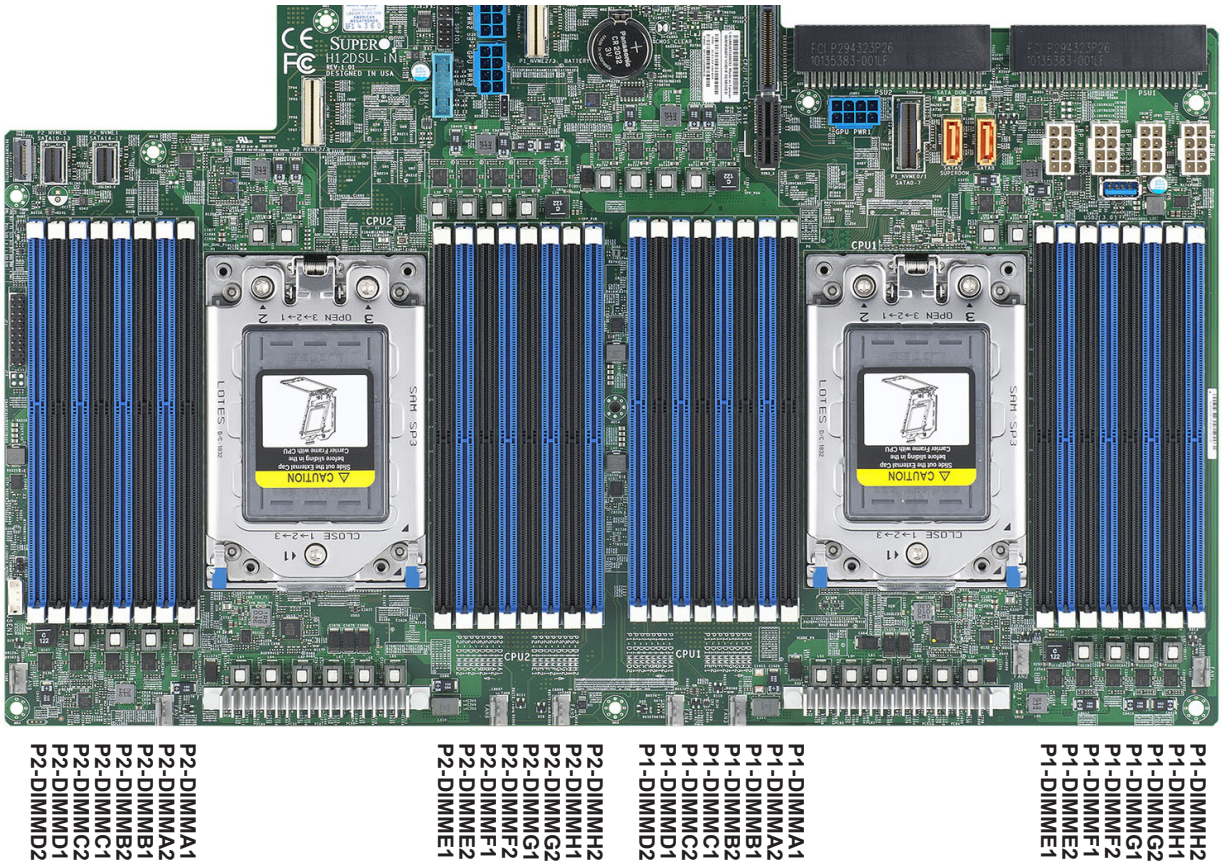

Figure 3-12. DIMM Numbering

Installing Memory

ESD Precautions

Electrostatic Discharge (ESD) can damage electronic components including memory modules. To avoid damaging DIMM modules, it is important to handle them carefully. The following measures are generally sufficient.

- Use a grounded wrist strap designed to prevent static discharge.
- Handle the memory module by its edges only.
- Put the memory modules into the antistatic bags when not in use.

Installing Memory

Begin by removing power from the system as described in Section 3.1, and remove the node from the chassis. Follow the memory population sequence in the table above.

1. Push the release tabs outwards on both ends of the DIMM slot to unlock it.

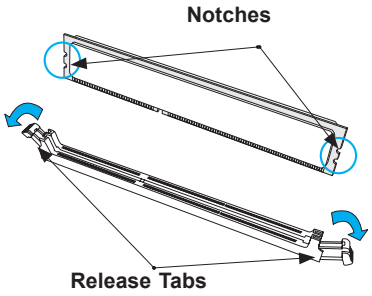

2. Align the key of the DIMM with the receptive point on the memory slot and with your thumbs on both ends of the module, press it straight down into the slot until the module snaps into place.

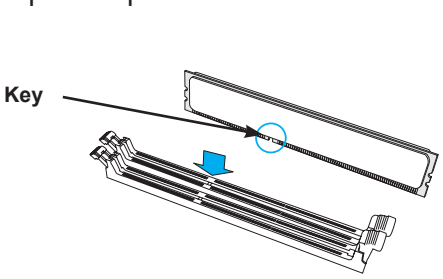

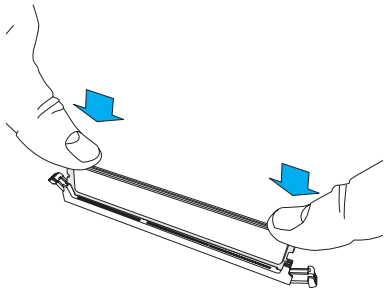

3. Press the release tabs to the locked position to secure the DIMM module into the slot.

Caution: Exercise caution when installing or removing memory modules to prevent damage to the DIMMs or slots.

Removing Memory

To remove a DIMM, unlock the release tabs then pull the DIMM from the memory slot.

Motherboard Battery

The motherboard uses non-volatile memory to retain system information when system power is removed. This memory is powered by a lithium battery residing on the motherboard.

Replacing the Battery

Begin by removing power from the system as described in section 3.1.

1. Push aside the small clamp that covers the edge of the battery. When the battery is released, lift it out of the holder.
2. To insert a new battery, slide one edge under the lip of the holder with the positive (+) side facing up. Then push the other side down until the clamp snaps over it.

Note: Handle used batteries carefully. Do not damage the battery in any way; a damaged battery may release hazardous materials into the environment. Do not discard a used battery in the garbage or a public landfill. Please comply with the regulations set up by your local hazardous waste management agency to dispose of your used battery properly.

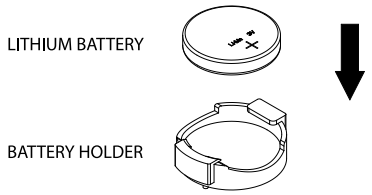

Figure 3-13. Installing the Onboard Battery

Warning: There is a danger of explosion if the onboard battery is installed upside down (which reverses its polarities). This battery must be replaced only with the same or an equivalent type recommended by the manufacturer (CR2032/ BR2032).

3.4 Chassis Components

This section provides instructions on installing and replacing system components. To assure compatibility, only use components that match the specifications or part numbers given.

Installation or replacement of most components require that power first be removed from the system.

Storage Drives

The CSE-219U supports twenty-four 2.5" hot-swap NVMe storage drives in toolless drive carriers that simplify their removal from the chassis. These carriers also help promote proper airflow.

Note: Enterprise level hard disk drives are recommended for use in Supermicro chassis and servers. For information on recommended HDDs, visit the Supermicro website at https://www.supermicro.com/en/Aplus/system/2U/2124/AS-2124US-TNRP.cfm

Drive Carrier Indicators

Each drive carrier has two LED indicators: an activity indicator and a status indicator. In RAID configurations, the status indicator lights to indicate the status of the drive. In non-RAID configurations, the status indicator remains off. See the table below for details.

Drive Carrier LED Indicators			
	Color	**Blinking Pattern**	**Behavior for Device**
Activity LED	Blue	Solid On	SAS/NVMe drive installed
	Blue	Blinking	I/O activity
Status LED	Red	Solid On	Failure of drive with RSTe support
	Red	Blinking at 1 Hz	Rebuild drive with RSTe support
	Red	Blinking with two blinks and one stop at 1 Hz	Hot spare for drive with RSTe support
	Red	On for five seconds, then off	Power on for drive with RSTe support
	Red	Blinking at 4 Hz	Identify drive with RSTe support
	Green	Solid On	Safe to remove NVMe device
	Amber	Blinking at 1 Hz	Attention state—do not remove NVMe device

Removing a Hot-Swap Drive Carrier from the Chassis

1. Press the release button on the drive carrier, which will extend the drive carrier handle.
2. Use the drive carrier handle to pull the drive out of the chassis.

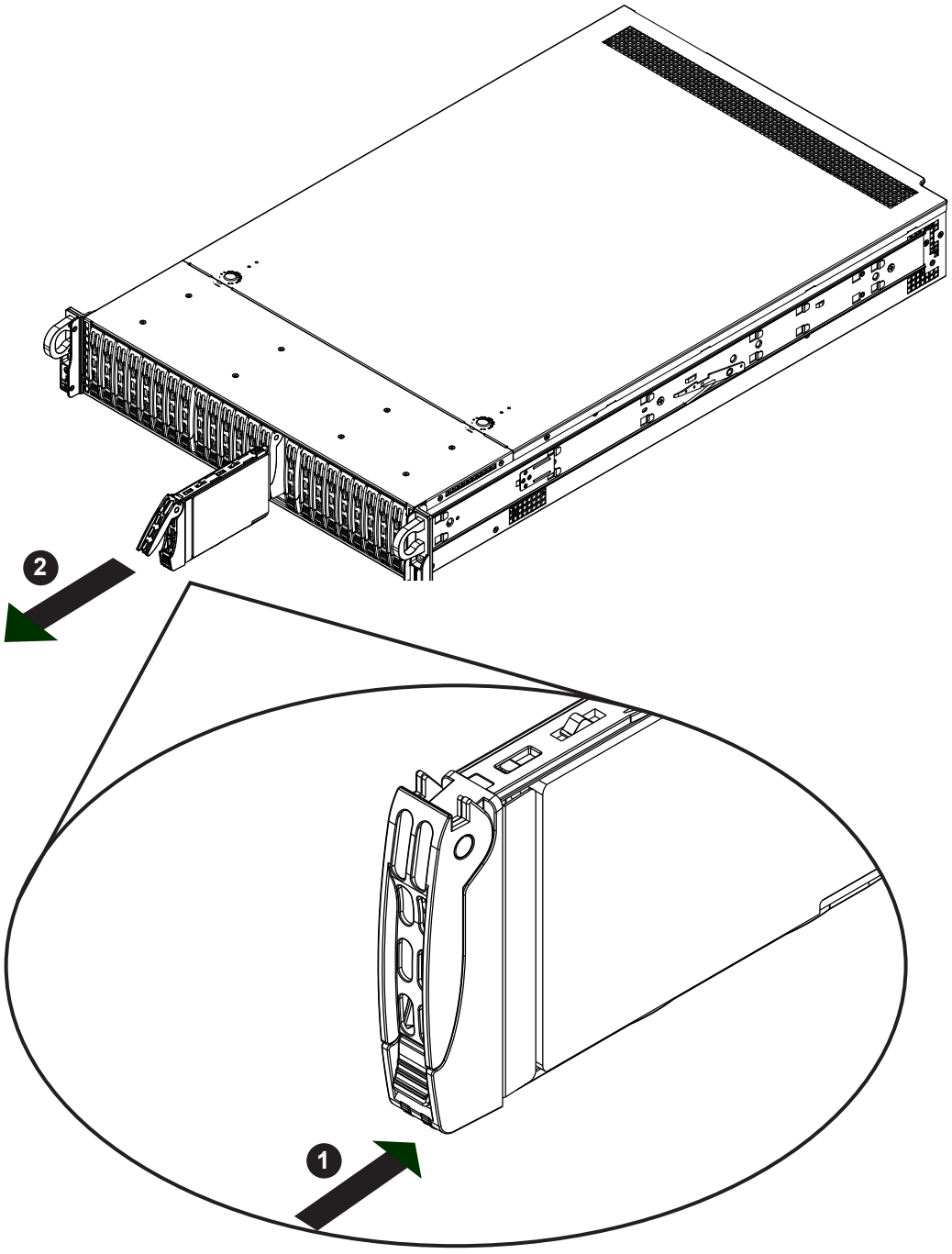

Figure 3-14. Removing a Drive Carrier

Note: Except for short periods of time while swapping hard drives, do not operate the server without the carriers in the drive bays.

Installing a Drive

1. Remove the dummy drive, which comes pre-installed in the drive carrier. Pull open the latches on the left side of the carrier and remove the dummy.

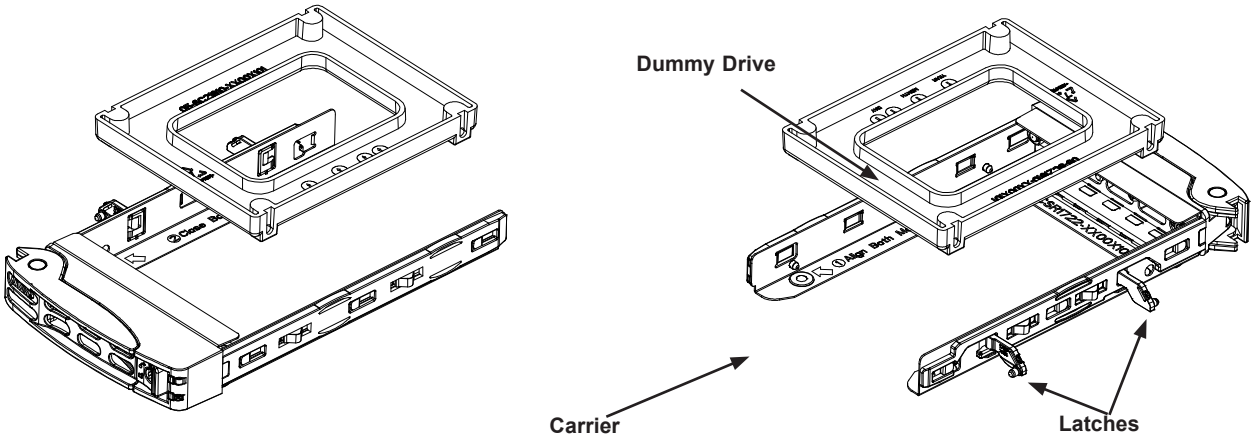

Figure 3-15. Removing the Dummy Drive from a Carrier

2. Insert a drive into the carrier with the PCB side facing down and the connector end toward the rear of the carrier.
3. Secure the drive to the carrier by closing the latches on the side of the carrier.
4. Insert the drive carrier with the drive into its bay, keeping the carrier oriented so that the release button is on the bottom. When the carrier reaches the rear of the bay, the release handle retracts.
5. Push the handle in until it clicks into its locked position.

Cabling for NVMe

Use NVMe cables to connect the backplane (BPN-NVME4-216N-S24) to the NVMe add-on cards (AOC-SLG4-2E4T and AOC-SLG4-4E4T) and the motherboard. The proper ports must be connected so that all NVMe drives will be detected.

Note: These instructions are not applicable if using the 24 SAS Kit solution. (Contact Supermicro for more information.)

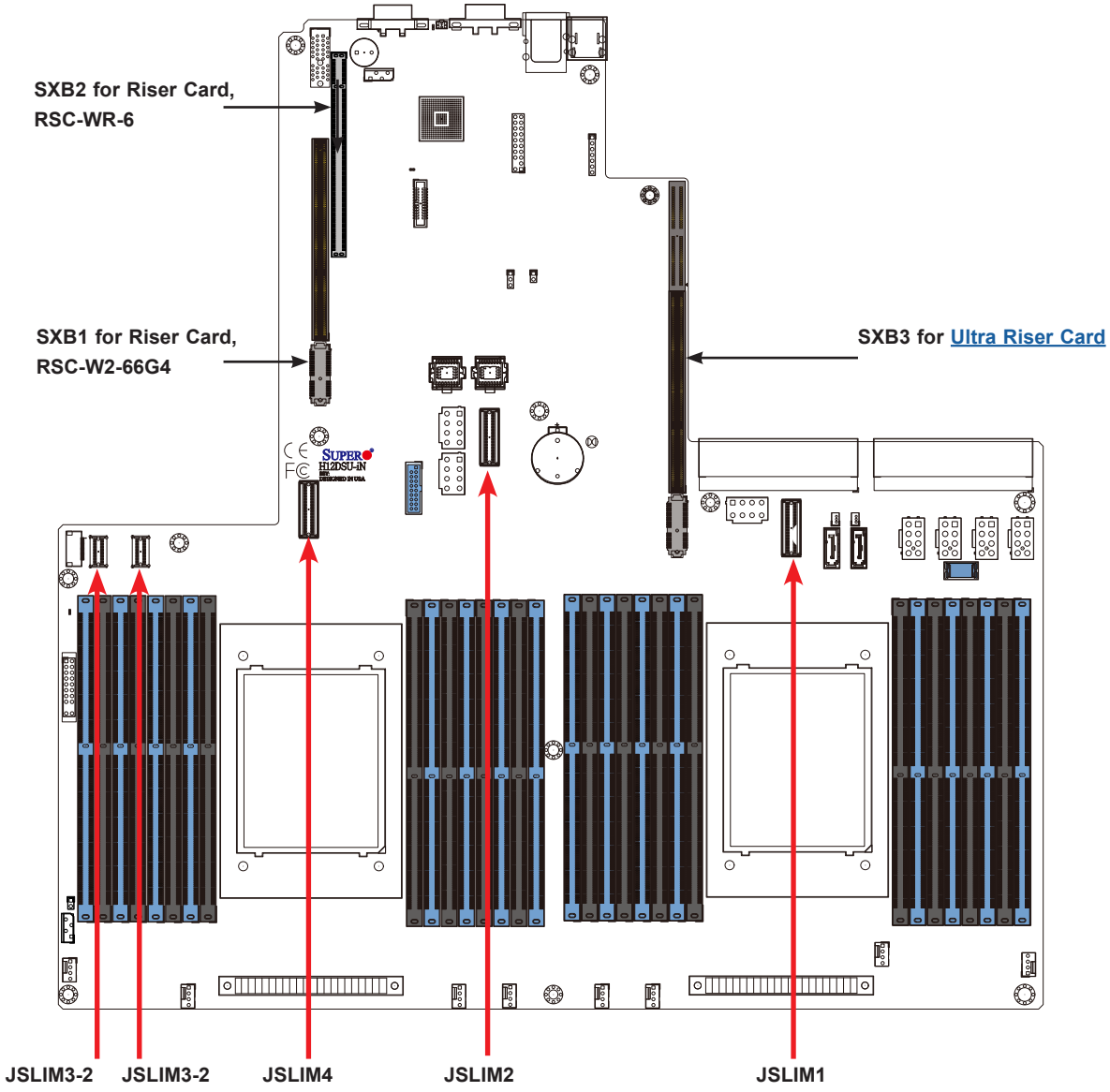

Figure 3-16. Motherboard Connections for NMVe

Positions of Add-on Cards

- Plug AOC-SLG4-4E4T into the lower slot 6 of RSC-W2-66G4 in SXB1.
- Plug AOC-SLG4-4E4T into the slot 4 of RSC-WR-6 in SXB2.
- Plug AOC-SLG4-2E4T into the lower-left slot 3 of Ultra Riser card in SXB3.
- Plug AOC-SLG4-2E4T into the upper-left slot 2 of Ultra Riser card in SXB3.
- Plug AOC-SLG4-4E4T into the right slot 1 of Ultra Riser card in SXB3.

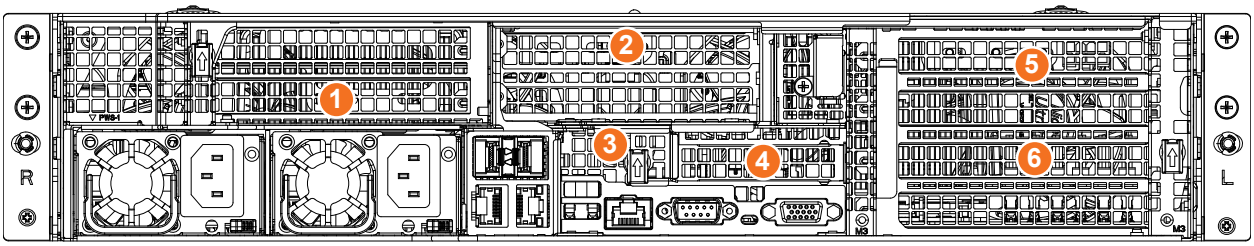

Figure 3-17. Add-on Card Positions (inside chassis)

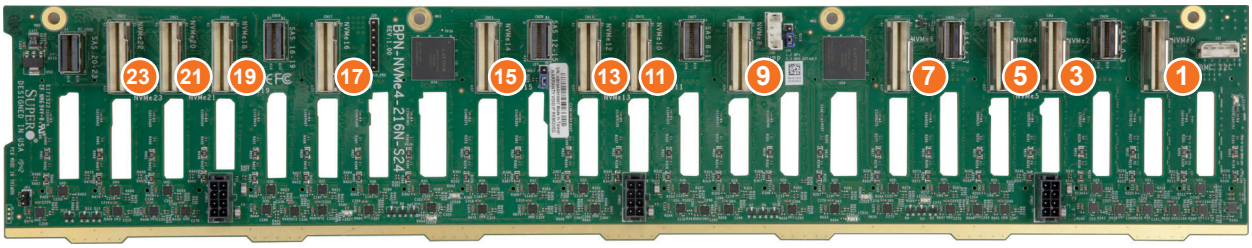

Figure 3-18. Backplane BPN-NVME4-216N-S24 Showing NVMe Drive Numbers
(Also labeled on the backplane)

NVMe Cabling				
From Connector on		**Cable**	**Drive Bay**	**Backplane Port**
Motherboard	JSLIM1 (P1_NVMe0/1)	CBL-SAST-1268-85	0-1	NVMe1
	JSLIM2 (P1_NVME2/3)	CBL-SAST-1256A-85	2-3	NVMe3
In 2UR68G4-i4XTS upper slot 1 AOC-SLG4-4E4T		CBL-SAST-1282-85	4-7	NVMe5&7
In Ultra Riser card internal slot 3 AOC-SLG4-2E4T		CBL-SAST-1265A-8	8-9	NVMe9
In Ultra Riser card slot 2 AOC-SLG4-2E4T		CBL-SAST-1265A-8	10-11	NVMe11
Motherboard	JSLIM3-1&3-2 (P2_NVME0/1)	CBL-SAST-1262F-85	12-13	NVMe13
	JSLIM4 (P1_NVME2/3)	CBL-SAST-1248-85	14-15	NVMe15
In RSC-W2-66G4 slot 6 AOC-SLG4-4E4T		CBL-SAST-1282-85	16-19	NVMe17&19
In RSC-WR-6 slot 4 AOC-SLG4-4E4T		CBL-SAST-1265A-85	20-23	NVMe21&23

Routing Cables

When connecting the cables to the backplane:

- Route the cables CBL-SAST-1282-85 for NVMe 5 & 7 port on backplane along the right edge of the chassis.
- Route the cables CBL-SAST-1282-85 and CBL-SAST-1262F-85 for NVMe 13,17 and 19 port on backplane along the left edge of the chassis.
- Route the rest of cables between the CPUs.

Hot-Swap for NVMe Drives

Supermicro Ultra servers support NVMe surprise hot-swap. For even better data security, NVMe *orderly* hot-swap is recommended. NVMe drives can be ejected and replaced remotely using IPMI.

Ejecting a Drive

1. **IPMI > Server Health > Storage Monitoring > Physical View**
2. From the **Available Actions** drop-down menu, select **Eject**. Check the desired drive, then click **Apply**. The drive Status LED indicator turns green.
3. Remove the drive.

Note that *Device* and *Group* are categorized by the CPLD design architecture.

Slot is the slot number on which the NVMe drives are mounted.

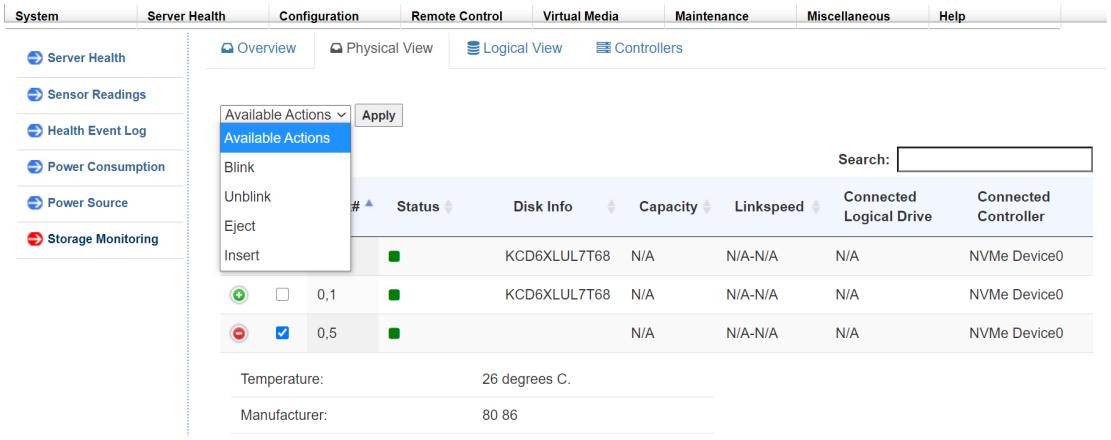

Figure 3-19. NVMe Drive Swap IPMI Screenshot

Replacing the Drive

1. Insert the replacement drive.
2. **IPMI > Server Health > Storage Monitoring > Physical View**
3. From the **Available Actions** drop-down menu, select **Insert**. Check the desired drive, then click **Apply**. The drive Status LED indicator flashes red, then turns off. The Activity LED turns blue.

Checking the Temperature of an NVMe Drive

There are two ways to check using IPMI.

Checking a Drive

- **IPMI > Server Health > NVMe SSD –** Shows the temperatures of all NVMe drives, as in Figure 3-4.
- **IPMI > Server Health > Sensor Reading > NVME_SSD –** Shows the single highest temperature among all the NVMe drives.

System Cooling

Fans

The chassis contains four 8-cm high-performance fans. Fan speed is controlled by IPMI depending on the system temperature. If a fan fails, the remaining fans will ramp up to full speed. The system will continue to run with a failed fan, although it may shut down if the heat gets too great. Replace any failed fan at your earliest convenience with the same model. Failed fans can be identified through the IPMI.

Changing a System Fan

1. Determine which fan has failed using IPMI, or if necessary, open the chassis while the system is running. Never run the server for long without the chassis cover.
2. Push the release tab and pull the failed fan from the chassis. Fans can be replaced while the system is running.
3. Replace the failed fan with an identical fan, available from Supermicro. Push the new fan into the housing, making sure the air flow direction is the same.
4. Power up the system and check that the fan is working properly and that the LED on the control panel has turned off. Finish by replacing the chassis cover.

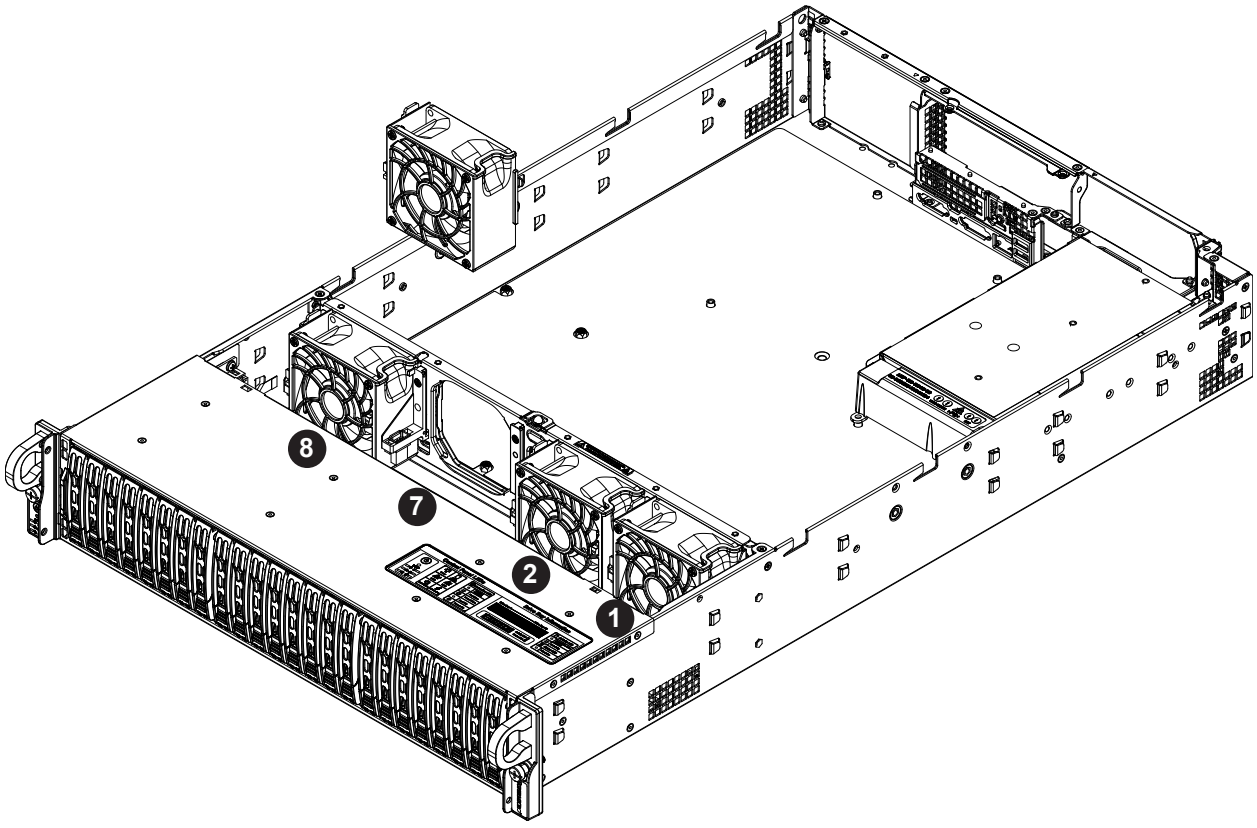

Figure 3-20. Fan Positions and Numbering

Installing the Air Shrouds

Air shrouds concentrate airflow to maximize fan efficiency. They do not require screws to install. If you use an M.2 SSD, a specialized shroud is installed instead of the standard shrouds. Some GPUs require specialized shrouds.

Installing the Standard Air Shrouds

- Position the air shrouds as illustrated in the figure below, sliding the front notch over the pin on the fan tray.

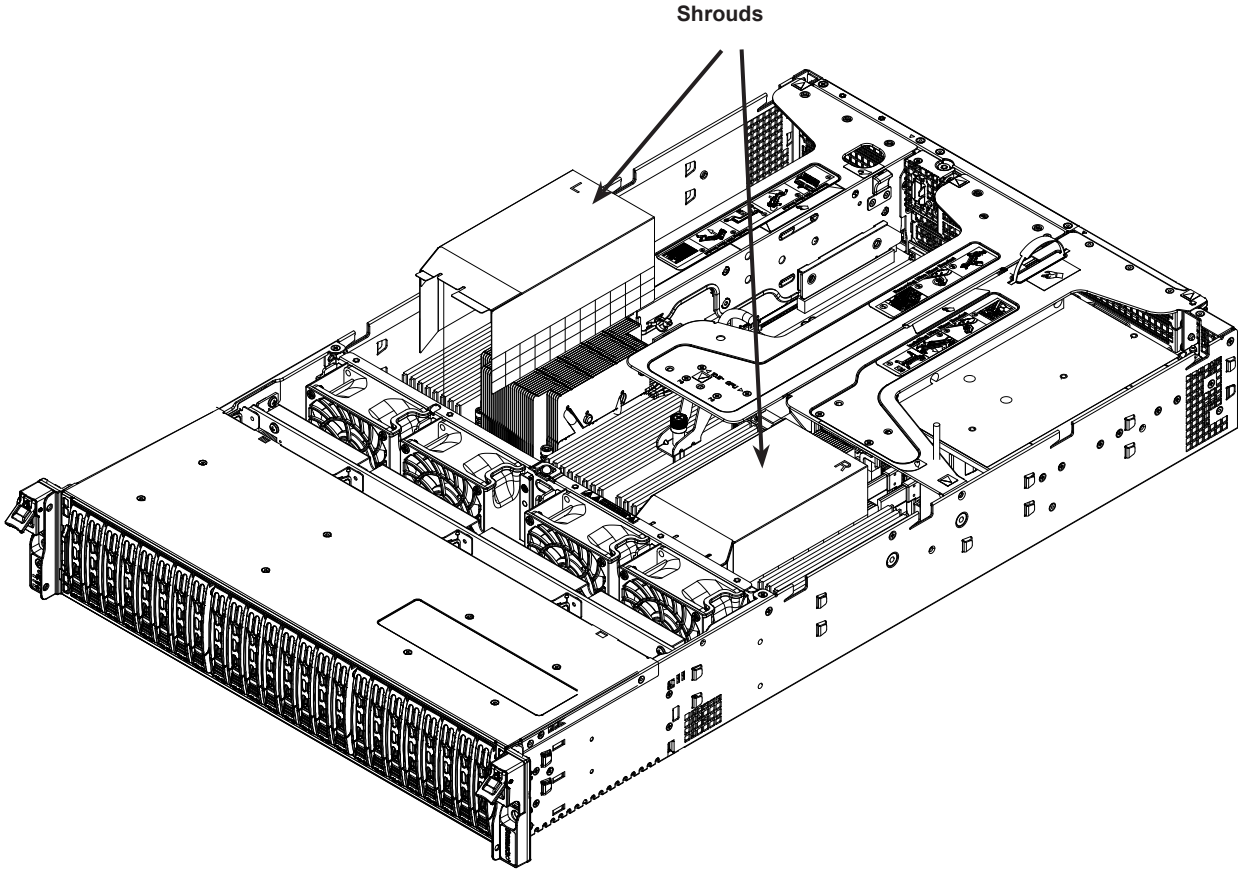

Note: Graphics are for illustration purposes only. Your components may look slightly different

Figure 3-21. Installing the Standard Air Shrouds

Checking the Server Air Flow

- Make sure there are no objects to obstruct airflow in and out of the server.
- If you are using a front bezel, make sure the bezel filter is replaced periodically.
- Do not operate the server without drives or drive trays in the drive bays.
- Use only recommended server parts.
- Make sure no wires or foreign objects obstruct air flow through the chassis. Pull all excess cabling out of the airflow path or use shorter cables.

The control panel LEDs display system heat status. See “Control Panel” in Chapter 1 for details.

Overheating

There are several possible responses if the system overheats.

Overheat Temperature Setting

Some backplanes allow the overheat temperature to be set at 45, 50, or 55 by changing a jumper setting. For more information, consult the backplane user manual at www.supermicro.com. (Click Support, then the Manuals link.)

Responses

If the server overheats:

1. Use the LEDs to determine the nature of the overheating condition.
2. Confirm that the chassis covers are installed properly.
3. Make sure all fans are present and operating normally.
4. Check the routing of the cables.
5. Verify that the heatsinks are installed properly.

Power Supply

The system features redundant power supplies and will continue to operate if one module fails. It should be replaced as soon as convenient. They can be changed without powering down the system. New units can be ordered directly from Supermicro or authorized distributors.

These power supplies are auto-switching capable. This feature enables them to automatically sense the input voltage and operate at a 100-120v or 180-240v.

Power Supply LEDs

On the rear of the power supply module, an LED displays the status.

- **Solid Green**: When illuminated, indicates that the power supply is on.
- **Blinking Green**: When blinking, indicates that the power supply is plugged in and turned off by the system.
- **Blinking Amber:** When blinking, indicates that the power supply has a warning condition and continues to operate.
- **Solid Amber**: When illuminated, indicates that the power supply is plugged in, and is in an abnormal state. The system might need service. Please contact Supermicro technical support.

Changing the Power Supply Module:

1. Unplug the AC cord from the module to be replaced.
2. On the back of the module, push the release tab sideways.
3. Pull the module out using the handle.

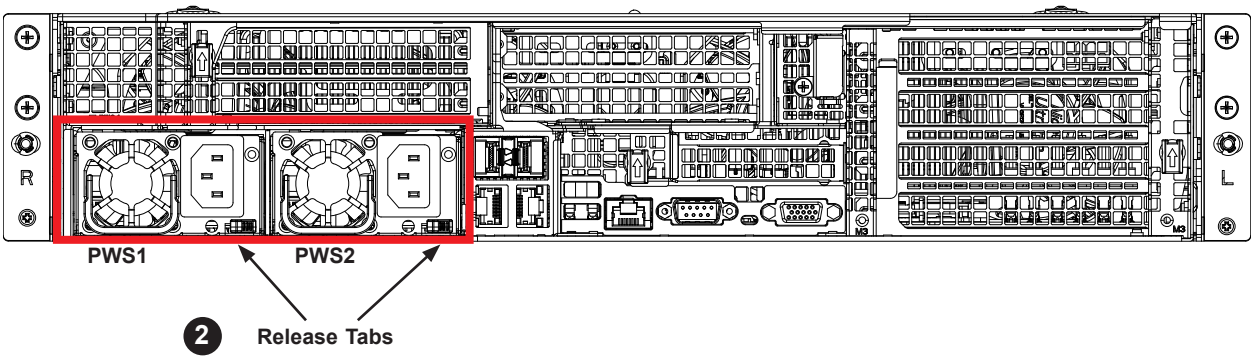

Figure 3-22. Power Supply Release Tabs

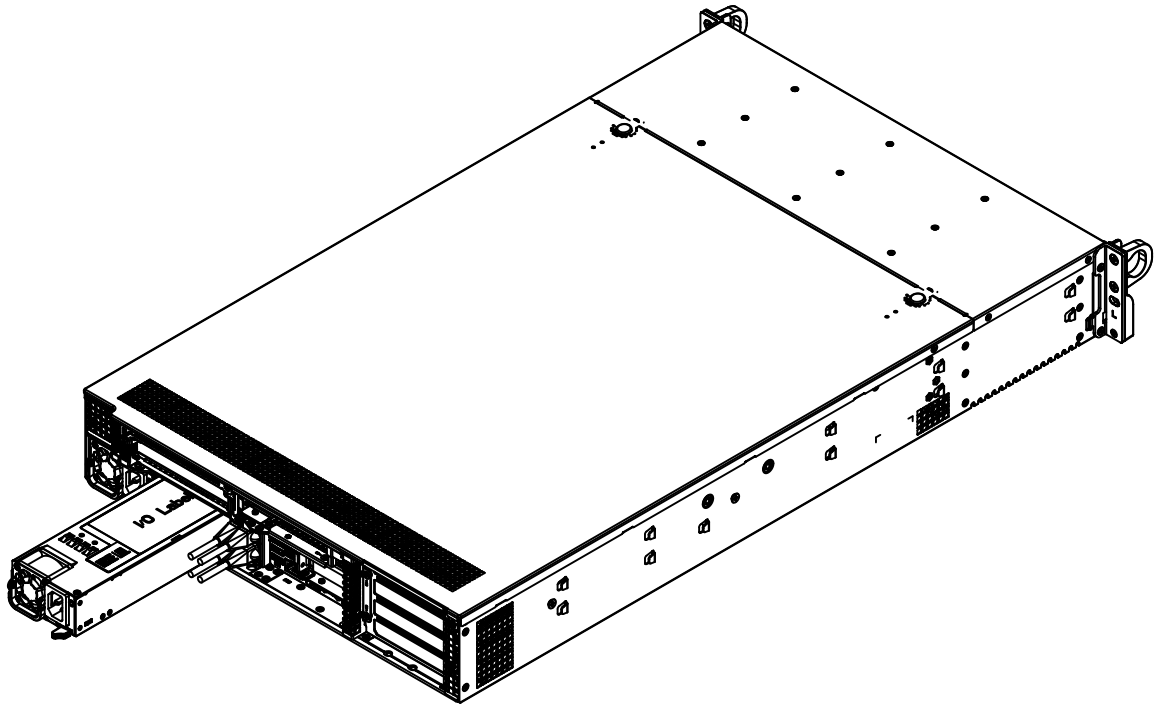

Figure 3-23. Replacing the Power Supply

4. Push the new power supply module into the power bay until it clicks. Replace with the same model.
5. Plug the AC power cord back into the module.

PCIe Expansion Cards

Riser cards on chassis brackets allow you to add one double-width, full-height, full-length x16 PCIe 4.0 expansion card. Only slot 5 below is available as the other are used for system NVMe support. Note that more slots may be available when the system includes the 24 SAS kit.

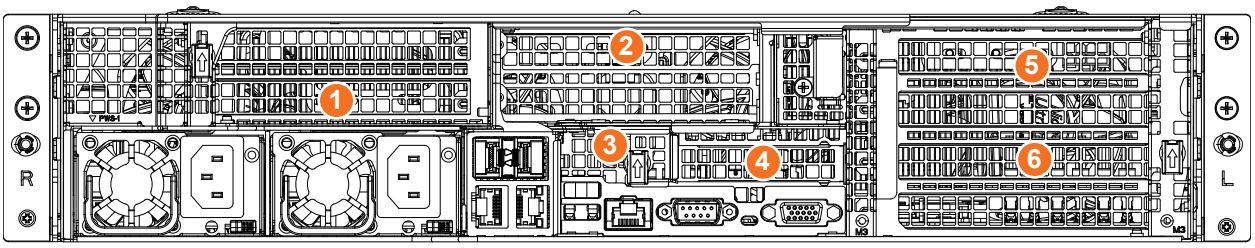

Figure 3-24. PCI Expansion Card Chassis Slots

Installing PCI Expansion Cards

1. Power down the system and remove the top chassis cover.
2. Remove the riser card bracket, pictured below. On the rear of the chassis, each bracket is secured by a small black plastic flip-lever with an arrow on it. Flip open the appropriate lever to release the bracket, then pull the bracket out of the chassis.
3. Insert the expansion card into the riser card slot while aligning the rear PCI shield.
4. Replace the riser card into the motherboard expansion slot while aligning the bracket into the chassis. Flip the black plastic lever back in place, making sure it snaps closed with a click.
5. Replace the chassis cover.

Installing Full Height Expansion Cards

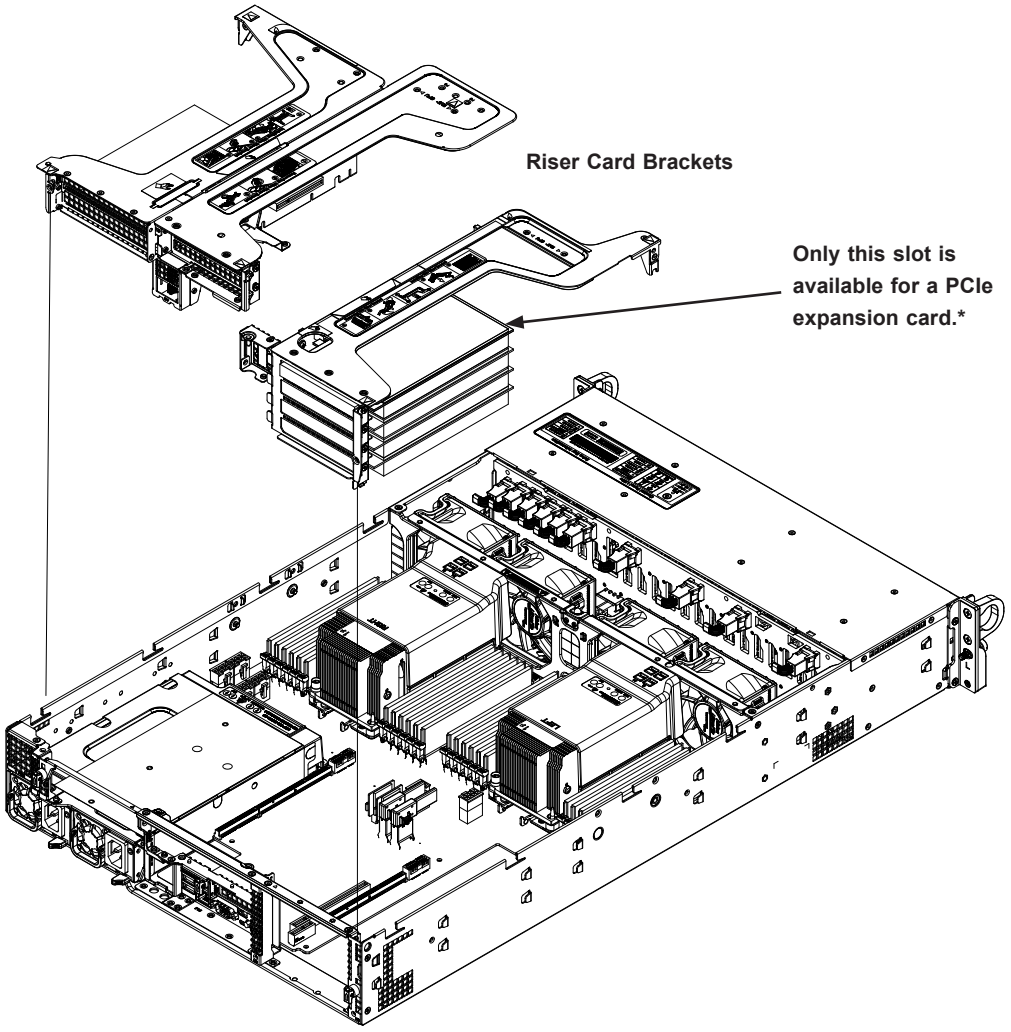

Figure 3-25. Installing an Expansion Card

*****Not applicable if using the 24 SAS Kit solution. (Contact Supermicro for more information.)

Removing the Ultra Riser Card

To remove the Ultra riser card, use two hands. One hand lifts the mylar release tab and the other hand lifts at the PCIe x8 slot at the same time. **Caution**: Lifting at only one of these points may cause damage to connectors on the motherboard.

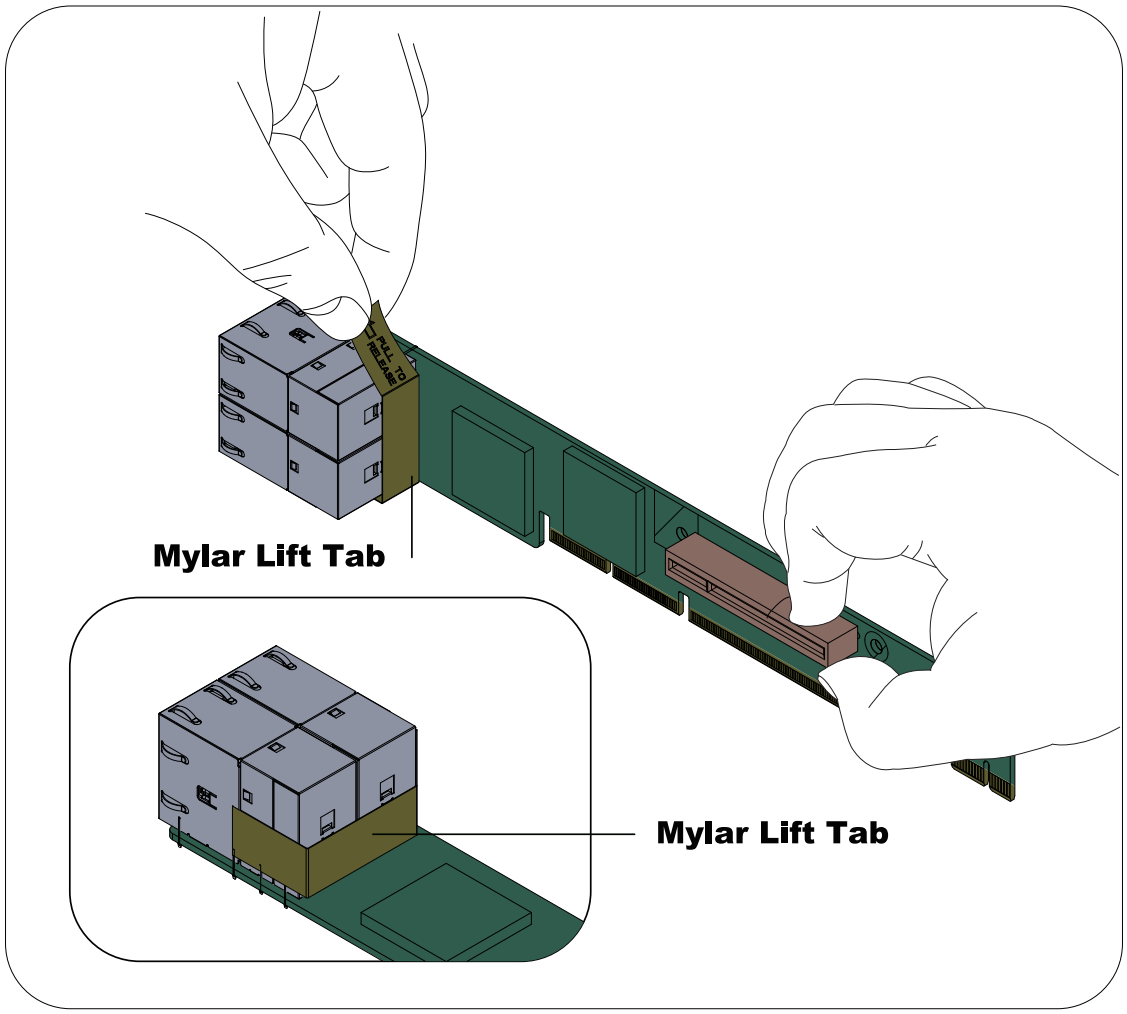

Figure 3-29. Removing the Ultra Riser Card

Chapter 4

Motherboard Connections

This section describes the connections, jumpers and LED indicators on the motherboard and provides pinout definitions. Not all connections are required. A motherboard layout indicating component locations may be found in Chapter 1.

Please review the Safety Precautions in appendix B before installing or removing components.

4.1 Power Connections

Two power connections on the H12DSU-iN must be connected to the power supply. The wiring is included with the power supply.

- Two 25-pin primary proprietary power (PSU1/PSU2)
- Four 8-pin backplane power (JPW1 – JPW4)
- Three 8-pin GPU power (GPU JPWR1, GPU JPWR2, GPU JPWR3)

Main Power Connector

Two proprietary main power headers are located at PSU1 and PSU2. Connect appropriate power supply units to these two headers to provide adequate power to your system.

Important: To provide adequate power to the motherboard, connect the both main power connectors to the power supply. Failure to do so may void the manufacturer's warranty on your power supply and motherboard.

Backplane 12V and 5V 8-pin Power Connectors

BP PWR1–4/BP are 8-pin 12V and 5V DC power inputs for the system backplane.

Backplane 8-pin Power Pin Definitions

Pin#	Definition
1 - 4	Ground
5 - 6	+12V
7 - 8	+5V

GPU 12V 8-pin Power Connectors

PWR1–3/GPU are 8-pin 12V DC power inputs for GPUs that are installed in the PCIe slots.

GPU 8-pin Power Pin Definitions

Pin#	Definition
1 - 4	Ground
5 - 8	+12V

4.2 Headers and Connectors

The data cables in the system have been carefully routed to maintain airflow efficiency. If you disconnect any of these cables, take care to re-route them as they were originally.

Important! Make sure the the cables do not come into contact with the fans.

Fan Headers

There are eight fan headers on the motherboard. These are 4-pin fan headers; pins 1-3 are backward compatible with traditional 3-pin fans. The onboard fan speeds are controlled using IPMI. When using the Fan Mode setting, use only 4-pin fans.

Fan Header Pin Definitions

Pin#	Definition
1	Ground (Black)
2	+12V (Red)
3	Tachometer
4	PWM Control

Chassis Intrusion

A chassis intrusion header is located at JL1 on the motherboard. Attach the appropriate cable from the chassis to the header to inform you when the chassis is opened.

Chassis Intrusion Pin Definitions

Pins	Definition
1	Intrusion Input
2	Ground

Disk-On-Module Power Connector

The Disk-On-Module (DOM) power connectors at JSD1 and JSD2 provide 5V power to a solid-state DOM storage device connected to one of the SATA ports.

DOM Power Pin Definitions

Pin#	Definition
1	5V
2	Ground
3	Ground

TPM Header/Port 80 Connector

The JTPM1 header is used to connect a Trusted Platform Module (TPM), which is available from Supermicro. A TPM is a security device that supports encryption and authentication in hard drives. It enables the motherboard to deny access if the TPM associated with the hard drive is not installed in the system.

For more information on TPM: https://www.supermicro.com/manuals/other/TPM.pdf.

Trusted Platform Module Header Pin Definitions

Pin#	Definition	Pin#	Definition
1	LCLK	2	GND
3	LFRAME#	4	No Pin
5	LRESET#	6	NC
7	LAD3	8	LAD2
9	3.3V	10	LAD1
11	LAD0	12	GND
13	SMB_CLK4 (X)	14	SMB_DAT4 (X)
15	P3V3_STBY	16	SERIRQ
17	GND	18	LP_CLKRUN_L
19	P3V3_STBY	20	LDRQ0_L

IPMB System Management Bus Header

A System Management Bus header for IPMI 2.0 is located at JIPMB1. Connect the appropriate cable here to use the IPMB I^2C connection on your system.

IPMB Header Pin Definitions

Pin#	Definition
1	Data
2	Ground
3	Clock
4	No Connection

System Thermal Sensor Header

A System Thermal Sensor header for IPMI 2.0 is located at JSEN1. Connect the appropriate cable here to use the thermal sensor I^2C connection on your system.

JSEN1 Header Pin Definitions

Pin#	Definition
1	Data
2	Ground
3	Clock
4	3.3V_Standby

UltraO Riser Card LAN LED Header

JF2 is a header for the UltraO Riser Card LAN LED header.

SATA Ports

The H12DSU-iN has eighteen SATA 3.0 ports (SATA0-17) that are supported by the chipset.

NVMe Connections

Four NVM Express (NVMe) ports are located on the motherboard (two for each processor). These ports provide high-speed, low-latency PCIe 4.0 x4 connections directly from the CPU to NVMe Solid State (SSD) drives. This greatly increases SSD data-throughput performance and significantly reduces PCIe latency by simplifying driver/software requirements resulted from direct PCIe interface from the CPU to the NVMe SSD drives.

Control Panel

JF1 contains header pins for various control panel connections designed specifically for use with Supermicro chassis. See the figure below for the pin locations and definitions of the control panel buttons and LED indicators.

All JF1 wires have been bundled into a single cable to simplify this connection. Make sure the red wire plugs into pin 1 as marked on the motherboard. The other end connects to the control panel PCB board.

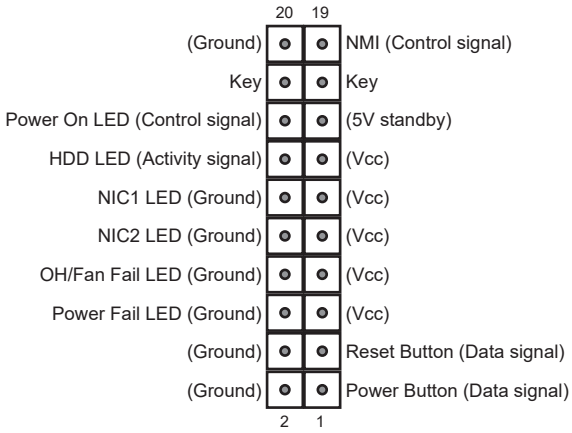

Figure 4-1. JF1: Control Panel Pins

Power Button

The Power Button connection is located on pins 1 and 2 of JF1. Momentarily contacting both pins will power on/off the system. This button can also be configured to function as a suspend button (with a setting in the BIOS - see Chapter 6). To turn off the power when the system is in suspend mode, press the button for 4 seconds or longer.

Power Button Pin Definitions (JF1)	
Pin#	**Definition**
1	Signal
2	Ground

Reset Button

The Reset Button connection is located on pins 3 and 4 of JF1. Attach it to a hardware reset switch on the computer case.

Reset Button Pin Definitions (JF1)	
Pin#	**Definition**
3	Reset
4	Ground

Power Fail LED

The Power Fail LED connection is located on pins 5 and 6 of JF1.

Reset Button Pin Definitions (JF1)	
Pin#	**Definition**
3	Reset
4	Ground

Overheat (OH)/Fan Fail

Connect an LED cable to pins 7 and 8 of JF1 to use the Overheat/Fan Fail LED connections. The LED on pin 8 provides warnings of overheat or fan failure.

OH/Fan Fail Indicator Status	
Status	**Definition**
Off	Normal
On	Overheat
Flashing	Fan Fail

OH/Fan Fail LED Pin Definitions (JF1)	
Pin#	**Definition**
7	Blue LED
8	OH/Fan Fail LED

NIC1/NIC2 (LAN1/LAN2)

The NIC (Network Interface Controller) LED connection for LAN port 1 is located on pins 11 and 12 of JF1, and the LED connection for LAN Port 2 is on Pins 9 and 10. Attach the NIC LED cables here to display network activity.

LAN1/LAN2 LED Pin Definitions (JF1)

Pin#	Definition
9	NIC2 Activity LED
10	NIC2 Link LED
11	NIC1 Activity LED
12	NIC1 Link LED

HDD LED/UID Switch

The HDD LED/UID Switch connection is located on pins 13 and 14 of JF1. Attach a cable to Pin 14 to show hard drive activity status. Attach a cable to Pin 13 to use UID switch.

HDD LED Pin Definitions (JF1)

Pin#	Definition
13	3.3V Standby/UID Switch
14	HDD Active

Power LED

The Power LED connection is located on pins 15 and 16 of JF1.

Power LED Pin Definitions (JF1)

Pin#	Definition
15	3.3V
16	Power LED

NMI Button

The non-maskable interrupt button header is located on pins 19 and 20 of JF1.

NMI Button Pin Definitions (JF1)

Pin#	Definition
19	Control
20	Ground

4.3 Ports

See the figure below for the locations and descriptions of the various I/O ports on the rear of the motherboard.

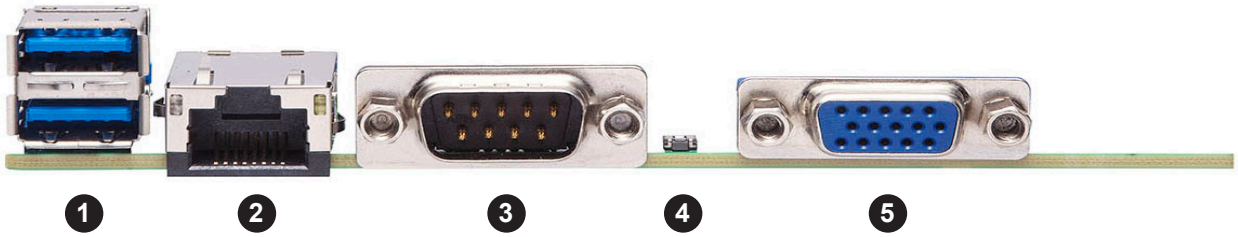

Figure 4-2. Rear I/O Ports

Rear I/O Ports			
#	**Description**	**#**	**Description**
1.	USB 0/1 Ports	4.	UID button and LED
2.	BMC LAN Port	5.	VGA Port
3	COM1 Port		

Universal Serial Bus (USB) Ports

There are two Universal Serial Bus ports located on the rear I/O panel and an additional two USB headers and a USB Type A header on the motherboard. These can be used to provide front USB access (cables not included).

Unit Identifier Switch/UID LED Indicator

A rear Unit Identifier (UID) switch and LED indicator are located on the rear side of the system. When you press the UID switch, both front and rear UID LED indicators are illuminated. Press the UID switch again to turn off the LEDs. The UID indicators provide easy identification of a system among a rack of many.

Note: UID can also be triggered using IPMI.

LAN Ports

There are two LAN ports on the chassis rear provided by the Ultra add-on card. There is also a dedicated BMC LAN port on the I/O back panel. For more information on the BMC, see Section 5.4 in this manual.

4.4 Jumpers

Explanation of Jumpers

To modify the operation of the motherboard, jumpers are used to choose between optional settings. Jumpers create shorts between two pins to change the function associated with it. Pin 1 is identified with a square solder pad on the printed circuit board. See the motherboard layout page for jumper locations.

Note: On a two-pin jumper, "Closed" means the jumper is on both pins and "Open" indicates the jumper is either on only one pin or has been completely removed.

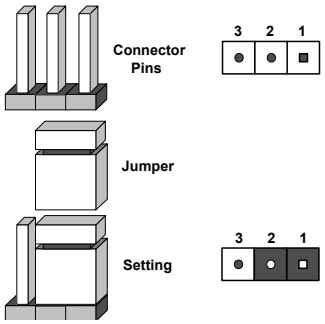

CMOS Clear

JBT1 is used to clear CMOS, which will also clear any passwords. Instead of pins, this jumper consists of contact pads to prevent accidentally clearing the contents of CMOS.

To Clear CMOS

1. First power down the system and unplug the power cord(s).
2. Remove the cover of the chassis to access the motherboard.
3. Remove the onboard battery from the motherboard.
4. Short the CMOS pads with a metal object such as a small screwdriver for at least four seconds.
5. Remove the screwdriver (or shorting device).
6. Replace the cover, reconnect the power cord(s) and power on the system.

Notes: Clearing CMOS will also clear all passwords.

Do not use the PW_ON connector to clear CMOS.



Watch Dog

JWD1 controls the Watch Dog function. Watch Dog is a monitor that can reboot the system when a software application hangs. Jumping pins 1-2 will cause Watch Dog to reset the system if an application hangs. Jumping pins 2-3 will generate a non-maskable interrupt signal for the application that hangs. Watch Dog must also be enabled in BIOS.

The default setting is Reset.

Note: When Watch Dog is enabled, the user must to write their own application software to disable it.

Watch Dog Jumper Settings

Jumper Setting	Definition
Pins 1-2	Reset
Pins 2-3	NMI
Open	Disabled

4.5 LED Indicators

LAN LEDs

For LAN ports with two LEDs, one LED indicates activity when blinking. The other may be green, amber or off to indicate the speed of the connection. For LAN ports with one LED, the LED indicates activity when blinking and may be green, amber or off to indicate the speed of the connection.

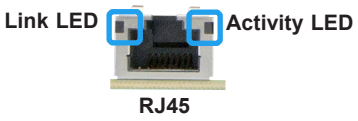

Ethernet Link Speed Indicator LED States		
Color	**10GbE**	**25GbE**
Green	10 Gbps	25 Gbps
Amber	Less than 10 Gbps	Less than 25 Gbps

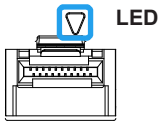

(Pictures for reference only)

BMC LAN Port LEDs

A dedicated BMC LAN on the rear I/O panel has two LED indicators. The LED on the right indicates activity, while the Link LED on the left indicates the speed of connection. The Link LED may be green, amber, or off to indicate the speed of the connection.

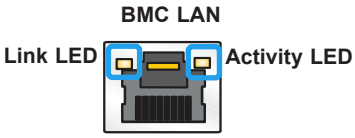

BMC LAN LED Link LED (left)	
LED Color	**Definition**
Off	10 Mb/s
Green	100 Mb/s
Amber	1 Gb/s

Onboard Power LED

PWROK is an Onboard Power LED. When this LED is illuminated, it means power is present on the motherboard. In suspend mode this LED will blink on and off.

BMC Heartbeat LED

A BMC Heartbeat LED (BMC_HB LED) blinks to indicate BMC is functioning normally.

BMC Heartbeat LED States		
Color	**State**	**Definition**
Green	Solid On	BMC is not ready.
Green	Blinking	BMC Normal
Green	Fast Blinking	BMC: Initializing

Chapter 5

Software

After the hardware has been installed, you can install the Operating System (OS), configure RAID settings and install the drivers.

5.1 Microsoft Windows OS Installation

If you will be using RAID, you must configure RAID settings before installing the Windows OS and the RAID driver. Refer to the RAID Configuration User Guides posted on our website at www.supermicro.com/support/manuals.

Installing the OS

1. Create a method to access the MS Windows installation ISO file. That can be a USB flash or media drive.
2. Go to the Supermicro web page for your motherboard and click on "Download the Latest Drivers and Utilities", select the proper driver, and copy it to a USB flash drive.
3. Boot from a bootable device with Windows OS installation. You can see a bootable device list by pressing **F11** during the system startup.

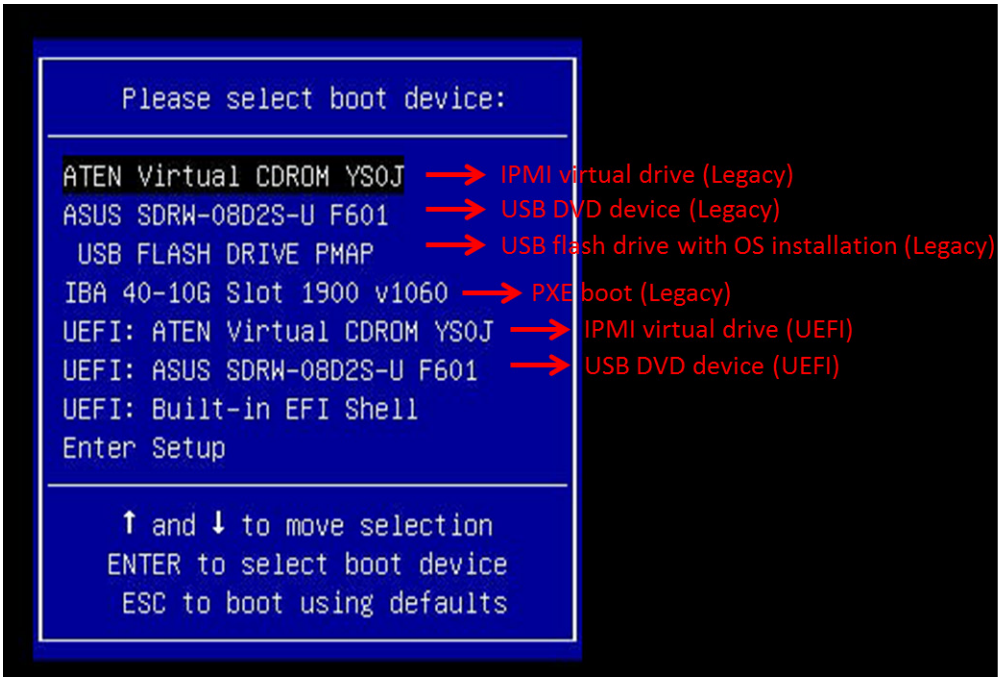

Figure 5-1. Select Boot Device

4. During Windows Setup, continue to the dialog where you select the drives on which to install Windows. If the disk you want to use is not listed, click on “Load driver” link at the bottom left corner.

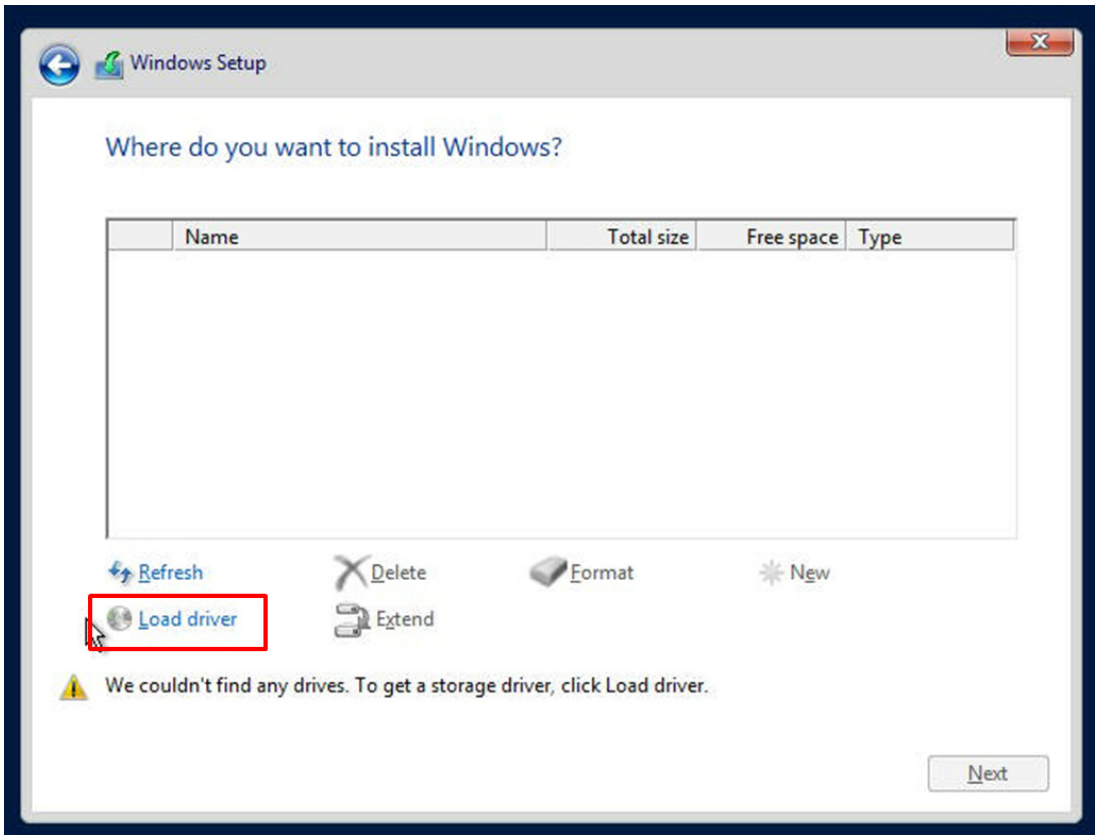

Figure 5-2. Load Driver Link

To load the driver, browse the USB flash drive for the proper driver files.

- For RAID, choose the SATA/sSATA RAID driver indicated then choose the storage drive on which you want to install it.
- For non-RAID, choose the SATA/sSATA AHCI driver indicated then choose the storage drive on which you want to install it.

5. Once all devices are specified, continue with the installation.
6. After the Windows OS installation has completed, the system will automatically reboot multiple times.

5.2 Driver Installation

The Supermicro website contains drivers and utilities for your system at www.supermicro.com/wdl/driver/AMD/SP3. Some of these must be installed, such as the chipset driver.

After accessing the website, go into the CDR_Images (in the parent directory of the above link) and locate the ISO file for your motherboard. Download this file to a USB flash or media drive. (You may also use a utility to extract the ISO file if preferred.)

Another option is to go to the Supermicro website at http://www.supermicro.com/products/. Find the product page for your motherboard, and "Download the Latest Drivers and Utilities".

Insert the flash drive or disk and the screenshot shown below should appear.

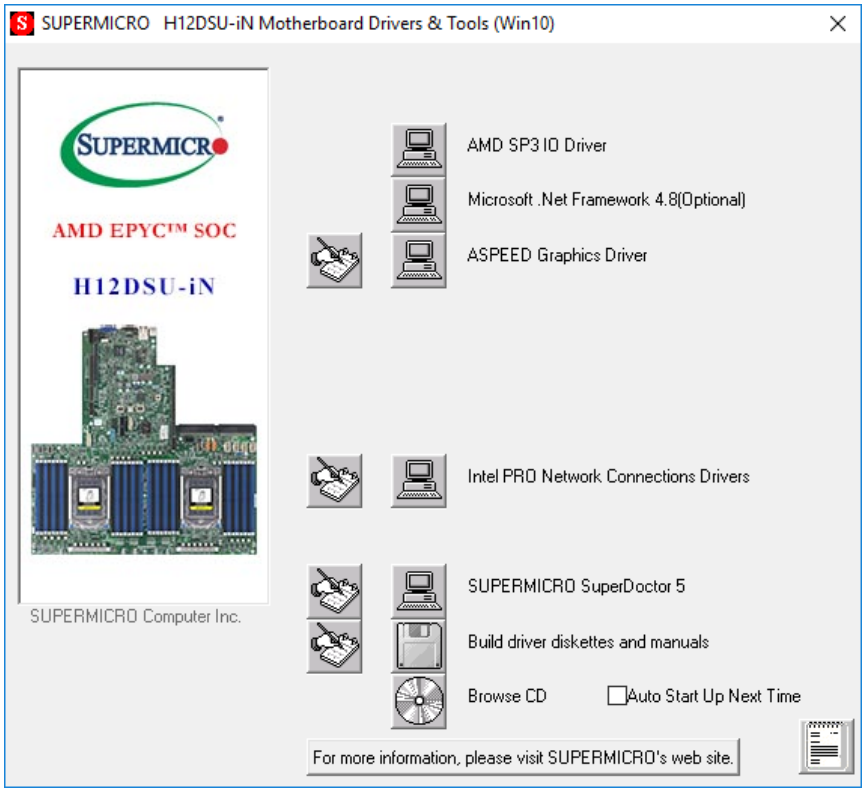

Figure 5-3. Driver & Tool Installation Screen

Note: Click the icons showing a hand writing on paper to view the readme files for each item. Click the computer icons to the right of these items to install each item (from top to the bottom) one at a time. **After installing each item, you must re-boot the system before moving on to the next item on the list.** The bottom icon with a CD on it allows you to view the entire contents.

5.3 SuperDoctor® 5

The Supermicro SuperDoctor 5 is a program that functions in a command-line or web-based interface for Windows and Linux operating systems. The program monitors such system health information as CPU temperature, system voltages, system power consumption, fan speed, and provides alerts via email or Simple Network Management Protocol (SNMP).

SuperDoctor 5 comes in local and remote management versions and can be used with Nagios to maximize your system monitoring needs. With SuperDoctor 5 Management Server (SSM Server), you can remotely control power on/off and reset chassis intrusion for multiple systems with SuperDoctor 5 or IPMI. SuperDoctor 5 Management Server monitors HTTP, FTP, and SMTP services to optimize the efficiency of your operation.

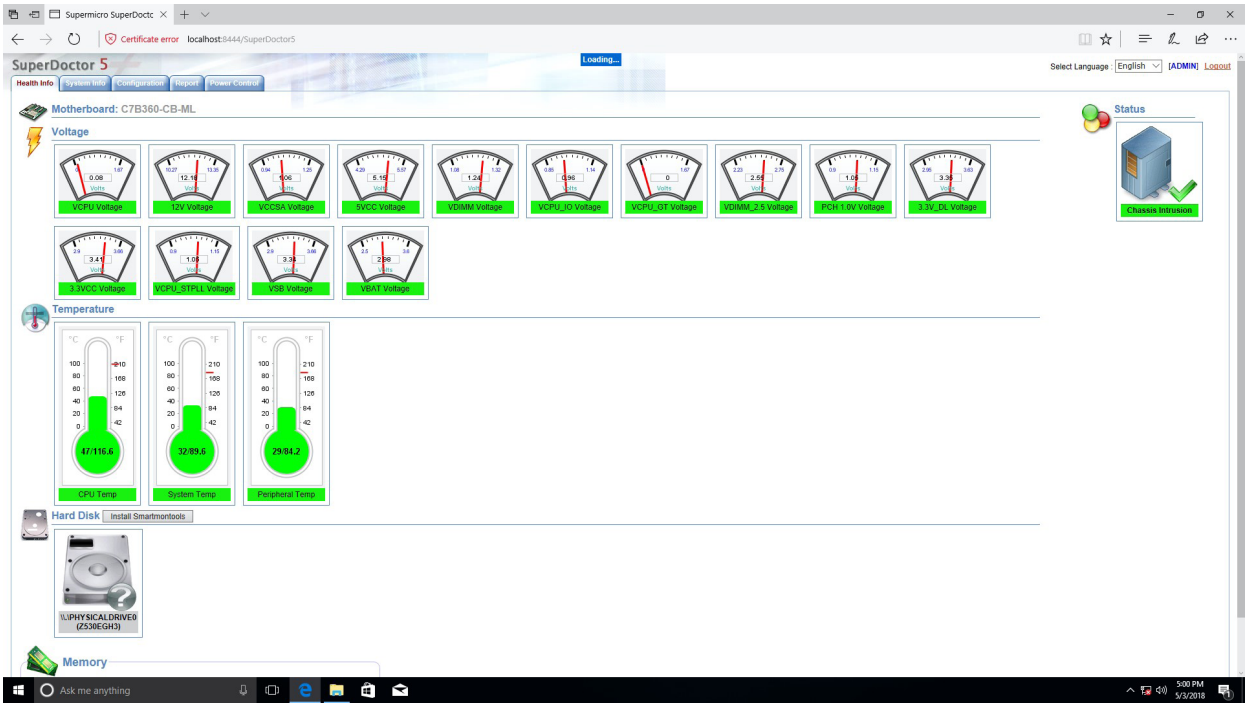

Figure 5-4. SuperDoctor 5 Interface Display Screen (Health Information)

5.4 BMC

The motherboard provides remote access, monitoring and management through the baseboard management controller (BMC) and other management controllers distributed among different system modules. There are several BIOS settings that are related to BMC. For general documentation and information on BMC, visit our website at:

www.supermicro.com/en/solutions/management-software/bmc-resources

BMC ADMIN User Password

For security, each system is assigned a unique default BMC password for the ADMIN user. This can be found on a sticker on the chassis and a sticker on the motherboard. The sticker also displays the BMC MAC address.



Figure 5-5. BMC Password Label

See Chapter 1, section 1.4 for the location of the label.

Chapter 6

UEFI BIOS

6.1 Introduction

This chapter describes the AMI BIOS setup utility for the H12DSU-iN and provides the instructions on navigating the setup screens. The BIOS is stored in a Flash EEPROM and can be updated.

Note: Due to periodic changes to the BIOS, some settings may have been added or deleted since this manual was published.

Starting BIOS Setup Utility

To enter the AMI BIOS setup utility screens, press the <Delete> key while the system is booting up. (There are a few cases when other keys are used, such as <F1>, <F2>, etc.)

The BIOS screens have three main frames. The large left frame displays options can be configured by the user. These are blue. When an option is selected, it is highlighted in white. Settings printed in **Bold** are the default values.

In the left frame, a " ▶" indicates a submenu. Highlighting such an item and pressing the <Enter> key opens the list of settings in that submenu.

The upper right frame displays helpful information for the user. The AMI BIOS has default informational messages built in. The manufacturer retains the option to include, omit, or change any of these informational messages.

The lower right frame lists navigational methods. The AMI BIOS setup utility uses a key-based navigation system called *hot keys*. Most of these hot keys can be used at any time during setup navigation. These keys include <F3>, <F4>, <Enter>, <ESC>, arrow keys, etc.

Some system parameters may be changed.

6.2 Main Setup

When running the AMI BIOS setup utility, it starts with the Main screen. You can always return to it by selecting the Main tab on the top of the screen.

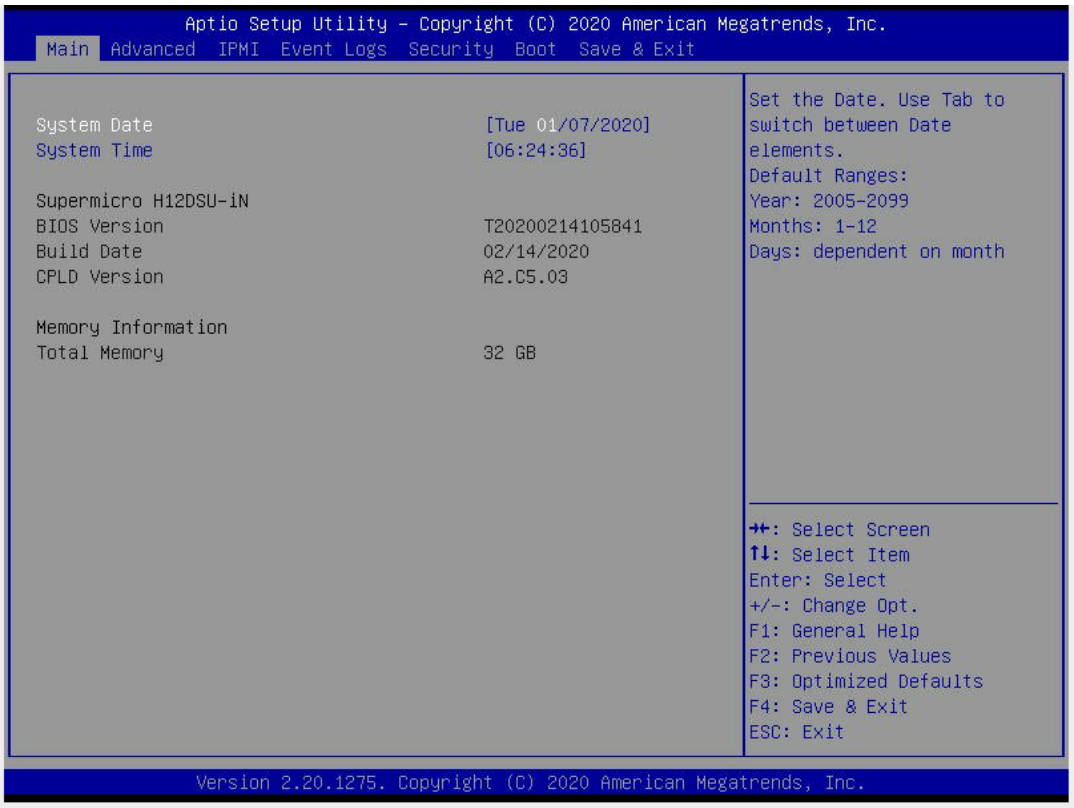

The Main tab page allows you to set the date and time, and it displays system information.

System Date/System Time

Use this option to change the system date and time. Highlight *System Date* or *System Time* using the arrow keys. Enter new values using the keyboard. Press the <Tab> key or the arrow keys to move between fields. The date must be entered in MM/DD/YYYY format. The time is entered in HH:MM:SS format.

Note: The time is in the 24-hour format. For example, 5:30 P.M. appears as 17:30:00. The date's default value is 01/01/2016 after RTC reset.

Supermicro H12DSU-iN (Motherboard model)

BIOS Version

Build Date (of the BIOS)

CPLD (Complex Programmable Logic Device) Version: This item displays the CPLD version used in the system.

Memory Information

Total Memory (for the system)

6.3 Advanced Setup Configurations

Use the arrow keys to select the Advanced tab and press <Enter> to access the submenu items.

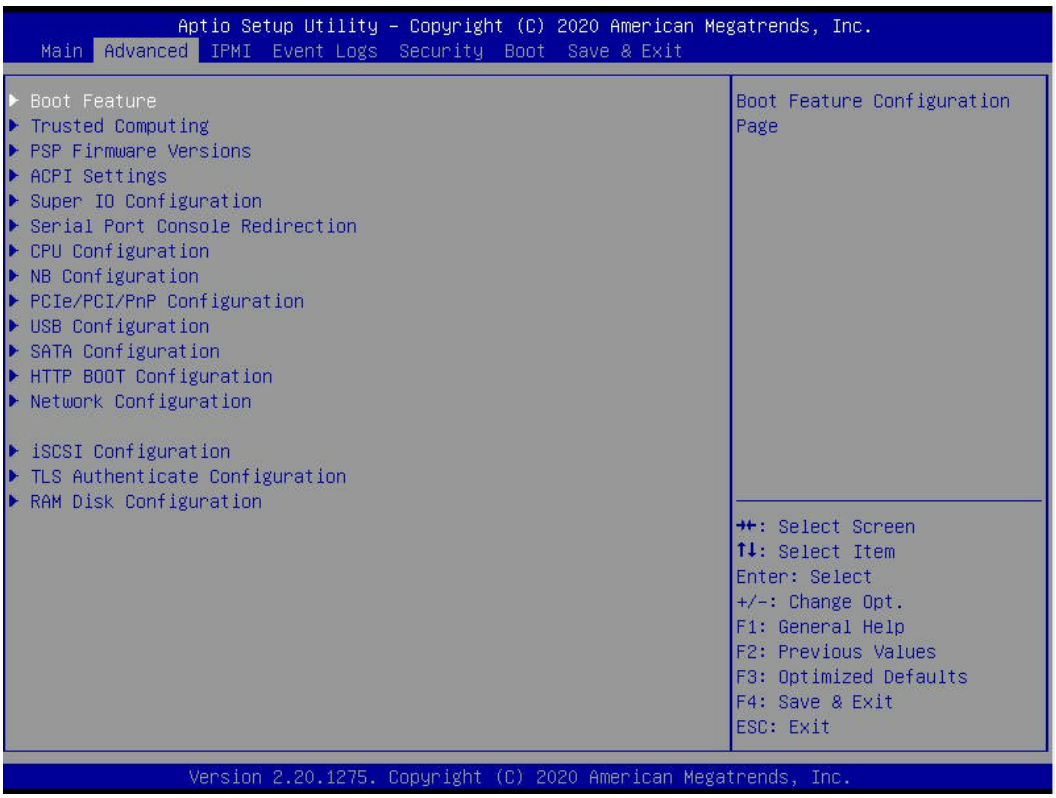

Caution: Take caution when changing the Advanced settings. An incorrect value, a very high DRAM frequency, or an incorrect DRAM timing setting may make the system unstable. If this occurs, revert to the manufacture default settings.

▶Boot Feature

Quiet Boot

Use this feature to select the screen display between the POST messages and the OEM logo upon bootup. Select Disabled to display the POST messages. Select Enabled to display the OEM logo instead of the normal POST messages. The options are **Enabled** and Disabled.

Option ROM Messages

Use this feature to set the display mode for the Option ROM. Select Keep Current to display the current AddOn ROM setting. Select Force BIOS to use the Option ROM display set by the system BIOS. The options are **Force BIOS** and Keep Current.

Bootup NumLock State

Use this feature to set the Power on state for the <Numlock> key. The options are **On** and Off.

Wait For "F1" If Error

Use this feature to force the system to wait until the 'F1' key is pressed if an error occurs. The options are Disabled and **Enabled**.

INT19 (Interrupt 19) Trap Response

Interrupt 19 is the software interrupt that handles the boot disk function. When this item is set to Immediate, the ROM BIOS of the host adaptors will "capture" Interrupt 19 at bootup immediately and allow the drives that are attached to these host adaptors to function as bootable disks. If this item is set to Postponed, the ROM BIOS of the host adaptors will not capture Interrupt 19 immediately and allow the drives attached to these adaptors to function as bootable devices at bootup. The options are **Immediate** and Postponed.

Re-try Boot

If this item is enabled, the BIOS will automatically reboot the system from a specified boot device after its initial boot failure. The options are **Disabled**, Legacy Boot, and EFI Boot.

Power Configuration

Watch Dog Function

If enabled, the Watch Dog Timer will allow the system to reset or generate NMI based on jumper settings when it is expired for more than 5 minutes. The options are **Disabled** and Enabled.

Restore on AC Power Loss

Use this feature to set the power state after a power outage. Select Stay-Off for the system power to remain off after a power loss. Select Power-On for the system power to be turned on after a power loss. Select Last State to allow the system to resume its last power state before a power loss. The options are Stay Off, Power On, and **Last State**.

Power Button Function

This feature controls how the system shuts down when the power button is pressed. Select 4 Seconds Override for the user to power off the system after pressing and holding the power button for 4 seconds or longer. Select Instant Off to instantly power off the system as soon as the user presses the power button. The options are **Instant Off** and 4 Seconds Override.

▶Trusted Computing

Configuration

Security Device Support

If this feature and the TPM jumper on the motherboard are both set to Enabled, onboard security devices will be enabled for TPM (Trusted Platform Module) support to enhance data integrity and network security. Please reboot the system for a change on this setting to take effect. The options are Disable and **Enable**.

▶PSP Firmware Versions

This section displays the Platform Security Processor (PSP) firmware versions.

PSP Directory Level 1 (Fixed)

- PSP Recovery BL Ver
- SMU FW Version
- ABL Version

PSP Directory Level 2 (Updateable)

- PSP Bootloader Version
- SMU FW Version
- ABL Version

▶ ACPI Settings

PCI AER Support

The options are **Disabled** and Enabled.

High Precision Event Timer

The High Precision Event Timer (HPET) can produce periodic interrupts and is used to synchronize multimedia streams, providing smooth playback and reducing the need to use other timestamp calculations. The options are **Enabled** and Disabled.

NUMA Node Per Socket

The options are NPS0, NPS1, NPS2, NPS4 and **Auto**.

ACPI SRAT L3 Cache As NUMA Domain

The options are Disabled, Enabled and **Auto**.

▶Super IO Configuration

The following Super IO information will display:

- Super IO Chip AST2500

▶Serial Port 1 Configuration

Serial Port

Select Enabled to enable the selected onboard serial port. The options are Disabled and **Enabled**.

Device Settings

This item displays the status of a serial part specified by the user.

Change Settings

This feature specifies the base I/O port address and the Interrupt Request address of a serial port specified by the user. Select Auto to allow the BIOS to automatically assign the base I/O and IRQ address. The options are **Auto**, (IO=3F8h; IRQ=4;); (IO=3F8h; IRQ=3, 4, 5, 6, 7, 9, 10, 11, 12;); (IO=2F8h; IRQ=3, 4, 5, 6, 7, 9, 10, 11, 12;); (IO=3E8h; IRQ=3, 4, 5, 6, 7, 9, 10, 11, 12;); and (IO=2E8h; IRQ=3, 4, 5, 6, 7, 9, 10, 11, 12;).

▶SOL Configuration

Serial Port

Select Enabled to enable the selected onboard serial port. The options are Disabled and **Enabled**.

Change SOL Settings

This feature specifies the base I/O port address and the Interrupt Request address of a serial port specified by the user. Select Auto to allow the BIOS to automatically assign the base I/O and IRQ address. The options are **Auto**, (IO=2F8h; IRQ=3;); (IO=3F8h; IRQ=3, 4, 5, 6, 7, 9, 10, 11, 12;); (IO=2F8h; IRQ=3, 4, 5, 6, 7, 9, 10, 11, 12;); (IO=3E8h; IRQ=3, 4, 5, 6, 7, 9, 10, 11, 12;); and (IO=2E8h; IRQ=3, 4, 5, 6, 7, 9, 10, 11, 12;).

▶Serial Port Console Redirection

COM1

Console Redirection

Select Enabled to enable console redirection support for a serial port specified by the user. The options are Enabled and **Disabled**.

If the item above set to Enabled, the following items will become available for user's configuration:

▶Console Redirection Settings

Terminal Type

This feature allows the user to select the target terminal emulation type for Console Redirection. Select VT100 to use the ASCII Character set. Select VT100+ to add color and function key support. Select ANSI to use the Extended ASCII Character Set. Select VT-UTF8 to use UTF8 encoding to map Unicode characters into one or more bytes. The options are VT100, **VT100+**, VT-UTF8, and ANSI.

Bits per second

Use this feature to set the transmission speed for a serial port used in Console Redirection. Make sure that the same speed is used in the host computer and the client computer. A lower transmission speed may be required for long and busy lines. The options are 9600, 19200, 38400, 57600 and **115200** (bits per second).

Data Bits

Use this feature to set the data transmission size for Console Redirection. The options are 7 and **8**.

Parity

A parity bit can be sent along with regular data bits to detect data transmission errors. Select Even if the parity bit is set to 0, and the number of 1's in data bits is even. Select Odd if the parity bit is set to 0, and the number of 1's in data bits is odd. Select None if you do not want to send a parity bit with your data bits in transmission. Select Mark to add a mark as a parity bit to be sent along with the data bits. Select Space to add a Space as a parity bit to be sent with your data bits. The options are **None**, Even, Odd, Mark, and Space.

Stop Bits

A stop bit indicates the end of a serial data packet. Select 1 Stop Bit for standard serial data communication. Select 2 Stop Bits if slower devices are used. The options are **1** and 2.

Flow Control

Use this feature to set the flow control for Console Redirection to prevent data loss caused by buffer overflow. Send a "Stop" signal to stop sending data when the receiving buffer is full. Send a "Start" signal to start sending data when the receiving buffer is empty. The options are **None** and Hardware RTS/CTS.

VT-UTF8 Combo Key Support

Select Enabled to enable VT-UTF8 Combination Key support for ANSI/VT100 terminals. The options are Disabled and **Enabled.**

Recorder Mode

Select Enabled to capture the data displayed on a terminal and send it as text messages to a remote server. The options are **Disabled** and Enabled.

Resolution 100x31

Select Enabled for extended-terminal resolution support. The options are Disabled and **Enabled**.

Legacy OS Redirection Resolution

For Legacy OS systems, use this setting to specify the number of Rows and Columns supported for redirection. Options include 80x24 and **80x25**.

Putty KeyPad

This feature selects the settings for Function Keys and KeyPad used for Putty, which is a terminal emulator designed for the Windows OS. The options are **VT100**, LINUX, XTERMR6, SC0, ESCN, and VT400.

Redirection After BIOS POST

For this setting, when the Bootloader is selected, then the Legacy Console Redirection is disabled before booting to the legacy OS. If you select Always Enable, then the Legacy Console Redirection is enabled for legacy OS systems. Default option for this system is **Always Enable**.

The options are **Always Enable** and BootLoader.

SOL

Console Redirection

Select Enabled to enable SOL console redirection support for a serial port specified by the user. The options are **Enabled** and Disabled.

If the item above set to Enabled, the following items will become available for user's configuration:

▶Console Redirection Settings

Terminal Type

This feature allows the user to select the target terminal emulation type for Console Redirection. Select VT100 to use the ASCII Character set. Select VT100+ to add color and function key support. Select ANSI to use the Extended ASCII Character Set. Select VT-UTF8 to use UTF8 encoding to map Unicode characters into one or more bytes. The options are VT100, **VT100+**, VT-UTF8, and ANSI.

Bits per second

Use this feature to set the transmission speed for a serial port used in Console Redirection. Make sure that the same speed is used in the host computer and the client computer. A lower transmission speed may be required for long and busy lines. The options are 9600, 19200, 38400, 57600 and **115200** (bits per second).

Data Bits

Use this feature to set the data transmission size for Console Redirection. The options are 7 and **8**.

Parity

A parity bit can be sent along with regular data bits to detect data transmission errors. Select Even if the parity bit is set to 0, and the number of 1's in data bits is even. Select Odd if the parity bit is set to 0, and the number of 1's in data bits is odd. Select None if you do not want to send a parity bit with your data bits in transmission. Select Mark to add a mark

as a parity bit to be sent along with the data bits. Select Space to add a Space as a parity bit to be sent with your data bits. The options are **None**, Even, Odd, Mark, and Space.

Stop Bits

A stop bit indicates the end of a serial data packet. Select 1 Stop Bit for standard serial data communication. Select 2 Stop Bits if slower devices are used. The options are **1** and 2.

Flow Control

Use this feature to set the flow control for Console Redirection to prevent data loss caused by buffer overflow. Send a "Stop" signal to stop sending data when the receiving buffer is full. Send a "Start" signal to start sending data when the receiving buffer is empty. The options are **None** and Hardware RTS/CTS.

VT-UTF8 Combo Key Support

Select Enabled to enable VT-UTF8 Combination Key support for ANSI/VT100 terminals. The options are Disabled and **Enabled.**

Recorder Mode

Select Enabled to capture the data displayed on a terminal and send it as text messages to a remote server. The options are **Disabled** and Enabled.

Resolution 100x31

Select Enabled for extended-terminal resolution support. The options are Disabled and **Enabled**.

Legacy OS Redirection Resolution

For Legacy OS systems, use this setting to specify the number of Rows and Columns supported for redirection. Options include 80x24 and **80x25**.

Putty KeyPad

This feature selects the settings for Function Keys and KeyPad used for Putty, which is a terminal emulator designed for the Windows OS. The options are **VT100**, LINUX, XTERMR6, SC0, ESCN, and VT400.

Redirection After BIOS POST

For this setting, when the Bootloader is selected, then the Legacy Console Redirection is disabled before booting to the legacy OS. If you select Always Enable, then the Legacy Console Redirection is enabled for legacy OS systems. Default option for this system is **Always Enable**.The options are **Always Enable** and BootLoader.

▶Legacy Console Redirection Settings

Legacy Serial Redirection Port

For this setting, select a COM port to display redirection of Legacy OS and Legacy OPROM messages. Options include **COM1** and SOL.

Serial Port for Out-of-Band Management/Windows Emergency Management Services (EMS)

Console Redirection

Select Enabled to enable EMS console redirection support for a serial port specified by the user. The options are **Enabled** and Disabled.

If the item above set to Enabled, the following items will become available for user's configuration:

▶ Console Redirection Settings

Out-of-Band Mgmt Port

The feature selects a serial port in a client server to be used by the Microsoft Windows Emergency Management Services (EMS) to communicate with a remote host server. The options are **COM1** and SOL.

Terminal Type

Use this feature to select the target terminal emulation type for Console Redirection. Select VT100 to use the ASCII character set. Select VT100+ to add color and function key support. Select ANSI to use the extended ASCII character set. Select VT-UTF8 to use UTF8 encoding to map Unicode characters into one or more bytes. The options are VT100, VT100+, **VT-UTF8**, and ANSI.

Bits per Second

This item sets the transmission speed for a serial port used in Console Redirection. Make sure that the same speed is used in the host computer and the client computer. A lower transmission speed may be required for long and busy lines. The options are 9600, 19200, 57600, and **115200** (bits per second).

Flow Control

Use this item to set the flow control for Console Redirection to prevent data loss caused by buffer overflow. Send a "Stop" signal to stop sending data when the receiving buffer is full. Send a "Start" signal to start sending data when the receiving buffer is empty. The options are **None,** Hardware RTS/CTS, and Software Xon/Xoff.

Data Bits

Use this feature to set the data transmission size for Console Redirection. The options are 7 and **8**.

Parity

A parity bit can be sent along with regular data bits to detect data transmission errors. Select Even if the parity bit is set to 0, and the number of 1's in data bits is even. Select Odd if the parity bit is set to 0, and the number of 1's in data bits is odd. Select None if you do not want to send a parity bit with your data bits in transmission. Select Mark to add a mark

as a parity bit to be sent along with the data bits. Select Space to add a Space as a parity bit to be sent with your data bits. The options are **None**, Even, Odd, Mark, and Space.

Stop Bits

A stop bit indicates the end of a serial data packet. Select 1 Stop Bit for standard serial data communication. Select 2 Stop Bits if slower devices are used. The options are **1** and 2.

▶CPU Configuration

SMT Control

Use this setting to specify Simultaneous Multithreading. Options include Off for 1T single thread and **Auto** for 2T two-thread if your system is capable of it.

Core Performance Boost

This setting is used to configure for Core Performance Boost. Options include Disabled and **Auto**.

Global C-state Control

This setting is used to configure for Global C-state Control. Options include Disabled, Enabled and **Auto**.

Local APIC Mode

Use this setting to adjust local APIC mode. Options include xAPIC, x2APIC and **Auto**.

CCD Control

Use this setting to disable CCDs in the CPU. Options include **Auto**, 2 CCDs, 3 CCDs, 4 CCDs and 6 CCDs.

Core Control

This sets the number of cores to be used by your system. Once this option has been used to remove any cores, a power cycle is required in order for the future selections to take effect. Options include **Auto**, TWO (1+1), FOUR (2 + 2), and SIX (3 + 3). If unsure, leave this to Auto.

L1 Stream HW Prefetcher / L2 Stream HW Prefetcher

This setting is used to enable or disable the L1/L2 Stream Hardware Prefetcher. The options are Disabled, Enabled and **Auto**.

SVM Mode

This setting **Enables** or Disables CPU Virtualization.

SMEE

This setting Enables or **Disables** secure memory encryption.

▶CPU1/CPU2 Information

These sections are for informational purposes. They will display some details about the detected CPUs on the motherboard, such as:

- CPU Version
- Number of Cores Running
- Processor Family
- Processor Model
- Microcode Patch Level
- L1 Instruction Cache (Size/Method)
- L1 Data Cache (Size/Method)
- L2 Data Cache (Size/Method)
- L3 Cache per Scoket (Size/Method)

▶NB Configuration

Determinism Control

Use this setting to configure the Determinism Control. Options include **Auto** and Manual.

cTDP Control

Use this setting to configure the cTDP Control. Options include Manual and **Auto**.

IOMMU

Use this setting to enable/disable IOMMU. Options include **Disabled**, Enabled, and Auto.

ACS Enable

Use this setting to enable/disable ACS. Options include Enabled, Disabled and **Auto**.

Package Power Limit Control

Use this setting for Package Power Limit Control. Options include Manual and **Auto**.

APBDIS

Use this setting to set APBDIS. Options include 0, 1 and **Auto**.

DF Cstates

Use this setting to enable/disable DF Cstates. Options include Disabled, Enabled, and **Auto**.

4-link xGMI max speed

Use this setting to adjust 4-link xGMI max speed. Options include 10.667Gbps, 13Gbps, 16Gbps, 18Gbps and **Auto**.

Preferred IO

Use this setting for Preferred IO. Options include Manual and **Auto**.

▶Memory Configuration

Memory Clock

This setting allows you to select different memory clock speed. Options include **Auto** and speed settings from 2666Mhz, 2933MHz to 3200MHz.

Memory Interleaving

This setting controls fabric level memory interleaving. Note that the channel, die and socket have requirements on memory populations and it will be ignored if the memory doesn't support the selected option. Options include Disabled and **Auto**.

Memory Interleaving Size

This setting controls the memory interleaving size. This determines the starting address of the interleave (bit 8, 9, 10 or 11). Options include 256 Bytes, 512 Bytes, 1 KB, 2 KB or Auto.

Chipset Interleaving

This setting controls interleave memory blocks across the DRAM chip for node 0. The options are Disabled and **Auto**.

BankGroupSwap

This setting controls the Bank Group Swap. The options are Enabled, Disabled and **Auto**.

DRAM Scrub Time

The options are Disabled, 1 hour, 4 hours, 8 hours, 16 hours, 24 hours, 48 hours and **Auto**.

▶CPU1/CPU2 Memory Information

These sections are for informational purposes. They will display some details about the detected memory according to each CPU on the motherboard, such as:

- Detected Size (per slot, in MB)
- Current Speed (MT/s)

▶PCIe/PCI/PnP Configuration

This menu provides PCIe/PCI/PnP configuration settings and information.

PCI Bus Driver Version

Above 4G Decoding

This setting **Enables** or Disables 64-bit capable devices ability to be decoded in above 4G address space (only if the system supports 64-bit PCI decoding).

SR-IOV Support

If the system has SR-IOV capable PCI-E devices, this setting will Enable or **Disable** the Single Root IO Virtualization Support for the system.

BME DMA Mitigation

Re-enable Bus Master Attribute disabled during Pci enumeration for PCI Bridges after SMM Locked. The options are **Disabled** and Enabled.

PCIe ARI Support

Use this setting to Enable, Disable or **Auto** control the Alternative Routing-ID Interpretation.

PCIe Spread Spectrum

Use this setting to Enable or **Disable** PCI-E Spread Spectrum for your system.

VGA Priority

Use this setting to select between onboard or offboard VGA support The options are **Onboard** and Offboard

NVMe Firmware Source

Use this setting to select between the AMI Native firmware support or the device vendor-defined firmware support. The options are **Vendor Defined Firmware** and AMI Native Support**.**

M.2 (AHCI) Firmware Source

Use this setting to select between the AMI Native firmware support or the device vendor-defined firmware support. The options are **Vendor Defined Firmware** and AMI Native Support**.**

P1_NVME0/1 SATA0-7

Select PCIe NVMe or SATA engine for the hybrid port. Options include **Auto**, NVME and SATA.

P2_NVME0 SATA10-13

Select PCIe NVMe or SATA engine for the hybrid port. Options include **Auto**, NVME and SATA.

P2_NVME1 SATA14-17

Select PCIe NVMe or SATA engine for the hybrid port. Options include **Auto**, NVME and SATA.

Onboard LAN1 Option ROM

Use this setting to select which firmware function is to be loaded for onboard LAN1 on the system. Options include Disabled, **Legacy**, and EFI.

Onboard Video Option ROM

This setting selects which onboard video firmware type to be selected. Options include Disabled, **Legacy** and EFI.

▶Network Stack Confiuration

Network Stack

This setting allows you to **Enable** or Disable the UEFI Network Stack.

IPv4 PXE Support

This setting allows you to **Enable** or Disable IPv4 PXE boot support. If disabled, IPv4 PXE boot support will not be available.

IPv4 HTTP Support

This setting allows you to Enable or **Disable** IPv4 HTTP boot support. If disabled, IPv4 HTTP boot support will not be available.

IPv6 PXE Support

This setting allows you to **Enable** or Disable IPv6 PXE boot support. If disabled, IPv6 PXE boot support will not be available.

PXE boot wait time

Use either +/- or numberic keys to set the value of wait time in seconds and press <Esc> to abort the PXE boot.

Media detect count

Use either +/- or numberic keys to set the value of number of times the presence of media will be checked.

▶USB Configuration

USB Module Version

USB Controllers

USB Devices

Legacy Support

Select Enabled to support onboard legacy USB devices. Select Auto to disable legacy support if there are no legacy USB devices present. Select Disable to have all USB devices available for EFI applications only. The options include **Enabled**, Disabled and Auto.

XHCI Hand-off

This is a work-around solution for operating systems that do not support XHCI (Extensible Host Controller Interface) hand-off. The XHCI ownership change should be claimed by the XHCI driver. The options include **Enabled** and Disabled.

Port 60/64 Emulation

Select Enabled for I/O port 60h/64h emulation support, which in turn, will provide complete legacy USB keyboard support for the operating systems that do not support legacy USB devices.The options include Disabled and **Enabled**.

▶SATA Configuration

This section displays the detected SATA devices installed on the system.

SATA Enable

This setting enables or disables the on chip SATA controller. The options are Enabled, Disabled and **Auto**.

SATA Hot Plug

This setting enables or disables the on chip SATA hot plug feature. The options are Disabled, and **Enabled**.

▶SATA Information

This section displays information on the detected SATA devices:

- SATA0 ~ SATA17

▶HTTP Boot Configuration

HTTP Boot One Time

The default setting is Dsabled.

Input the description

Boot URI

A new Boot Option will be created according to this Boot URI. It is only supported on Dual or EFI Boot Mode.

▶Network Configuration

▶iSCSI Configuration

iSCSI Initiator Name

This feature allows the user to enter the unique name of the iSCSI Initiator in IQN format. Once the name of the iSCSI Initiator is entered into the system, configure the proper settings for the following items.

▶Add an Attempt

Use this setting to add an attempt.

▶Delete Attempts

Use this setting to delete one or more attempts.

▶Change Attempt Order

Use this setting to change the order of attempts.

▶TLS Authentication Configuration

This submenu allows the user to configure Transport Layer Security (TLS) settings.

▶Server CA Configuration

This feature allows the user to configure the client certificate that is to be used by the server.

▶Enroll Certification

This feature allows the user to enroll the certificate in the system.

▶Enroll Certification Using File

Use this feature to enroll certification from a file.

Certification GUID

Use this feature to enroll to input the certification GUID.

▶Commit Changes and Exit

Use this feature to save all changes and exit TLS settings.

▶Discard Changes and Exit

Use this feature to enroll to discard all changes and exit TLS settings.

▶Delete Certification

Use this feature to delete certification.

▶RAM Disk Configuration

Press <Enter> to add/remove RAM disks.

Disk Memory Type

Speficifies type of memory to use from available memory pool in system to create a disk.

▶Create raw

The valid RAM disk size should be multiples of the RAM disk block size.

▶Create from file

Use this setting to create a RAM disk from a given file.

Remove selected RAM disk(s).

Use this setting to remove the selected RAM disk(s).

6.4 IPMI

Use this tab page to configure Intelligent Platform Management Interface (IPMI) settings.

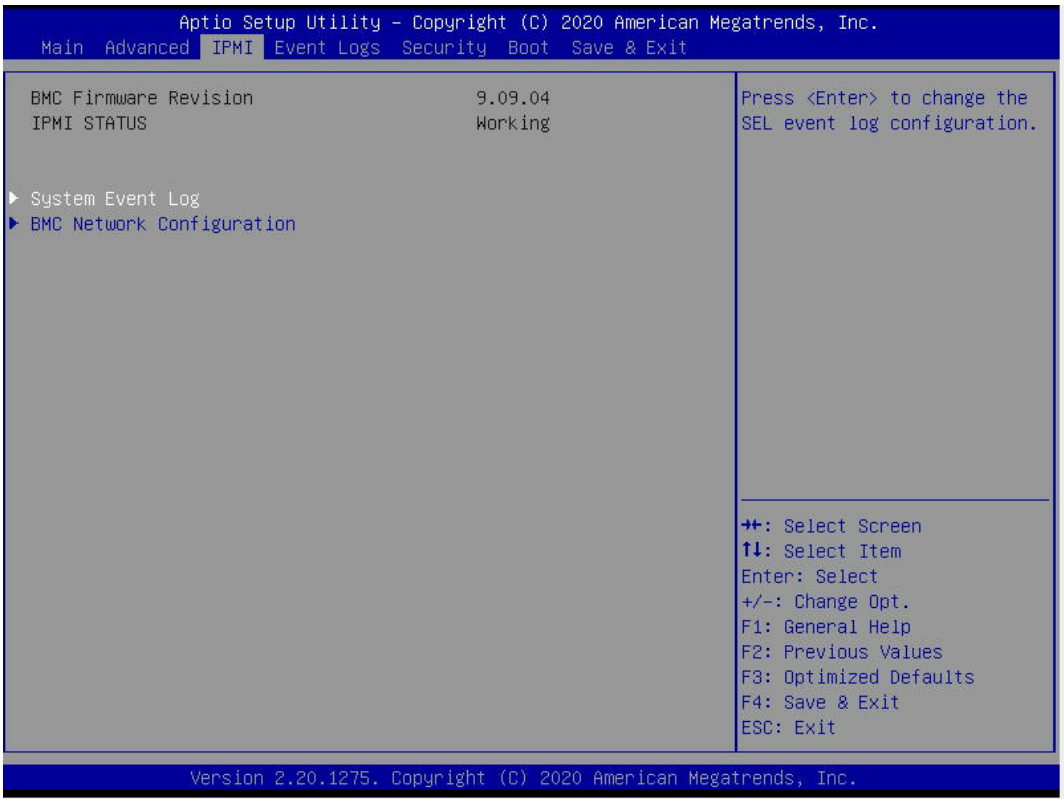

BMC Firmware Revision

This item indicates the IPMI firmware revision used in your system.

IPMI Status (Baseboard Management Controller)

This item indicates the status of the IPMI firmware installed in your system.

▶System Event Log

Enabling/Disabling Options

SEL Components

Select Enabled for all system event logging at bootup. The options are Disabled and **Enabled**.

Erasing Settings

Erase SEL

Select Yes, On next reset to erase all system event logs upon next system reboot. Select Yes, On every reset to erase all system event logs upon each system reboot. Select No

to keep all system event logs after each system reboot. The options are **No,** Yes, On next reset, and Yes, On every reset.

When SEL is Full

This feature allows the user to decide what the BIOS should do when the system event log is full. Select Erase Immediately to erase all events in the log when the system event log is full. The options are **Do Nothing** and Erase Immediately.

Note: After making changes on a setting, be sure to reboot the system for the changes to take effect.

▶BMC Network Configuration

BMC Network Configuration

Configure IPV4 Support

This section displays static configuration features for IPV4 support.

IPMI LAN Selection

This item displays the IPMI LAN setting. The default setting is **Failover**.

IPMI Network Link Status

This item displays the IPMI Network Link status. The default setting is **Dedicated LAN**.

Configuration Address Source

This feature allows the user to select the source of the IP address for this computer. If Static is selected, you will need to know the IP address of this computer and enter it to the system manually in the field. If DHCP is selected, the BIOS will search for a DHCP (Dynamic Host Configuration Protocol) server in the network that is attached to and request the next available IP address for this computer. The options are **DHCP** and Static.

If the item above is set to Static, the following items will become available for configuration:

Station IP Address

This item displays the Station IP address for this computer. This should be in decimal and in dotted quad form.

Subnet Mask

This item displays the sub-network that this computer belongs to. The value of each three-digit number separated by dots should not exceed 255.

Station MAC Address

This item displays the Station MAC address for this computer. Mac addresses are 6 two-digit hexadecimal numbers.

Gateway IP Address

This item displays the Gateway IP address for this computer. This should be in decimal and in dotted quad form (i.e., 172.31.0.1).

VLAN

This item displays the virtual LAN settings. The options are Disable and Enable.

Configure IPv6 Support

This section displays configuration features for IPv6 support.

IPv6 Support

Use this feature to enable IPv6 support. The options are Disabled and **Enabled**.

6.5 Event Logs

Use this tab page to configure Event Log settings.



▶Change SMBIOS Event Log Settings

This feature allows the user to configure SMBIOS Event settings.

Enabling/Disabling Options

SMBIOS Event Log

Select Enabled to enable SMBIOS (System Management BIOS) Event Logging during system boot. The options are Disabled and **Enabled**.

Erasing Settings

Erase Event Log

Select Yes to erase all error events in the SMBIOS (System Management BIOS) log before an event logging is initialized at bootup. The options are **No**, Yes, Next reset, and Yes, Every reset.

When Log is Full

Select Erase Immediately to immediately erase all errors in the SMBIOS event log when the event log is full. Select Do Nothing for the system to do nothing when the SMBIOS event log is full. The options are **Do Nothing** and Erase Immediately.

SMBIOS Event Log Standard Settings

Log System Boot Event

Select Enabled to log system boot events. The options are Enabled and **Disabled**.

MECI (Multiple Event Count Increment)

Enter the increment value for the multiple event counter. Enter a number between 1 to 255. The default setting is **1**.

METW (Multiple Event Count Time Window)

This item is used to determine how long (in minutes) the multiple event counter should wait before generating a new event log. Enter a number between 0 to 99. The default setting is **60**.

Note: Please reboot the system for these changes to take effect.

▶View SMBIOS Event Log

When Event Logging is on, this item allows the user to view the entries in the SMBIOS event log. The following categories are displayed:

Date/Time/Error Code/Severity

6.6 Security

Use this tab page to configure Security settings.

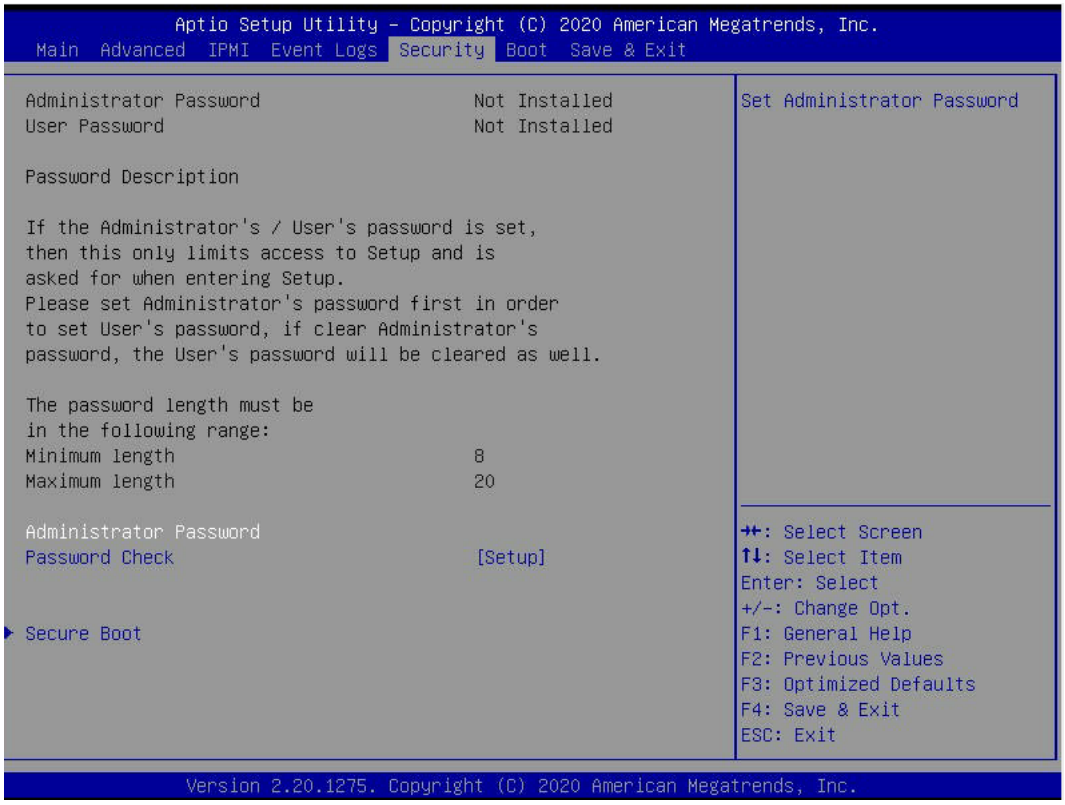

Administrator Password

Press <Enter> to create a new, or change an existing Administrator password. Note that if the Administrator Password is erased, the User Password will be cleared as well.

User Password

Press Enter to create a new, or change an existing User password.

Password Check

Select Setup for the system to check for a password at Setup. Select Always for the system to check for a password at bootup or upon entering the BIOS Setup utility. The options are **Setup** and Always.

▶Secure Boot

This section contains options and menus for securing your boot mode and for key management.

Secure Boot

This option allows you specify when the Platform Key (PK) is enrolled. When enabled, the System Mode is user deployed, and the CSM function is disabled. Options include **Disabled** and Enabled.

Secure Boot Mode

Use this item to select the secure boot mode. The options are Standard and **Custom**.

CSM Support

Select Enabled to support the EFI Compatibility Support Module (CSM), which provides compatibility support for traditional legacy BIOS for system boot. The options are Disabled and **Enabled**.

▶Key Management

This submenu allows the user to configure the following Key Management settings.

▶Vendor Keys

Provision Factory Defaults

Install factory default Secure Boot keys after the patform reset and while the System is in Setup mode. The defaut setting is **Disabled**.

▶Restore Factory Defaults

Select Yes to restore all factory keys to default settings. The options are Yes and No.

▶Reset To Setup Mode

Select Yes to delete all Secure Boot key databases and force the system to Setup Mode. The options are Yes and No.

▶Export Secure Boot variables

Use this feature to copy the NVRAM contents of the secure boot variables to a file.

▶Export Efi Image

This feature allows the image to run in Secure Boot mode. Enroll SHA256 Hash Certificate of a PE image into Authroized Signature Database (db).

Device Guard Ready

▶Remove 'UEFI CA' from DB

Use this feature to remove the Microsoft UEFI CA certificate from the database. The options are Yes and No.

▶Restore DB defaults

Select Yes to restore all DBs to the default settings. The options are Yes and No.

▶Platform Key (PK)

Details
Select this feature to view the details of the Platform Key.

Export
Select Yes to export a PK from a file on an external media.

Update
Select Yes to load a factory default PK or No to load from a file on an external media.

Delete
Select Ok to remove the PK and then the system will reset to Setup/Audit Mode.

▶Key Exchange Keys

Details
Select this feature to view the details of the Key Exchange Key.

Export
Select Yes to export a KEK from a file on an external media.

Update
Select Yes to load a factory default KEK or No to load from a file on an external media.

Append
Select Yes to add the KEK from the manufacturer's defaults list to the existing KEK. Select No to load the KEK from a file. The options are Yes and No.

Delete
Select Ok to remove the KEK and then the system will reset to Setup/Audit Mode.

▶Authorized Signatures

Details
Select this feature to view the details of the db.

Export
Select Yes to export a db from a file on an external media.

Update
Select Yes to load a factory default db or No to load from a file on an external media.

Append

Select Yes to add the db from the manufacturer's defaults list to the existing db. Select No to load the db from a file. The options are Yes and No.

Delete

Select Ok to remove the db and then the system will reset to Setup/Audit Mode.

▶Forbidden Signatures

Details

Select this feature to view the details of the dbx.

Export

Select Yes to export a dbx from a file on an external media.

Update

Select Yes to load a factory default dbx or No to load from a file on an external media.

Append

Select Yes to add the dbx from the manufacturer's defaults list to the existing dbx. Select No to load the dbx from a file. The options are Yes and No.

Delete

Select Ok to remove the dbx and then the system will reset to Setup/Audit Mode.

▶Authorized TimeStamps

Details

Select this feature to view the details of the dbt.

Export

Select Yes to export a dbt from a file on an external media.

Update

Select Yes to load a factory default dbt or No to load from a file on an external media.

Append

Select Yes to add the dbt from the manufacturer's defaults list to the existing dbt. Select No to load the dbt from a file. The options are Yes and No.

Delete

Select Ok to remove the dbt and then the system will reset to Setup/Audit Mode.

Set New Key

Select Yes to load the DBT from the manufacturer's defaults. Select No to load the DBT from a file. The options are Yes and No.

Append Key

Select Yes to add the DBT from the manufacturer's defaults list to the existing DBT. Select No to load the DBT from a file. The options are Yes and No.

▶OsRecovery Signature

The options are **Update** and Append.

This item uploads and installs an OSRecovery Signature. You may select options for Set New for a factory default key, or select Append to get it from a file. The file formats accepted are:

1) Public Key Certificate

a. EFI Signature List

b. EFI CERT X509 (DER Encoded)

c. EFI CERT RSA2048 (bin)

d. EFI SERT SHA256 (bin)

2) EFI Time Based Authenticated Variable

When prompted, select "Yes" to load Factory Defaults or "No' to load from a file.

6.7 Boot

Use this tab page to configure Boot Settings.

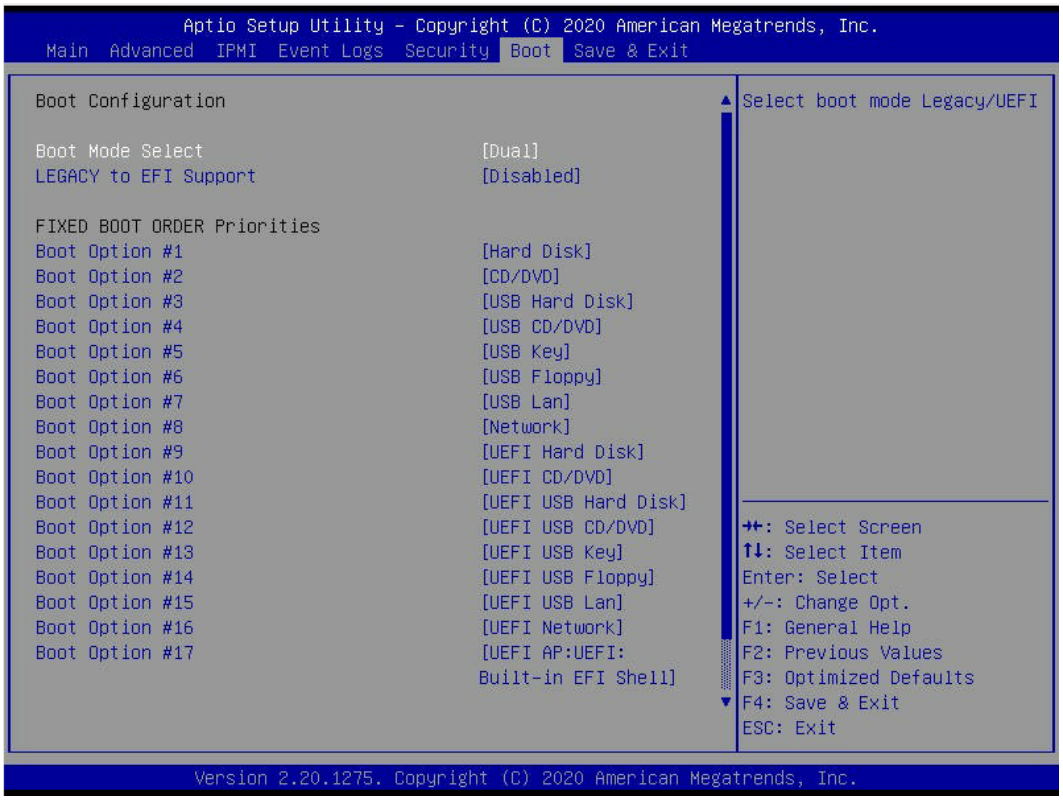

Boot Mode Select

Use this item to select the type of device that the system is going to boot from. The options are Legacy, UEFI, and **DUAL.** The default setting is DUAL.

Legacy to EFI Support

This option **Disables** or Enables the system to boot to an EFI OS after the boot failed from the legacy boot order.

FIXED BOOT ORDER Priorities Section

This option prioritizes the order of bootable devices that the system to boot from. Press <Enter> on each entry from top to bottom to select devices.

▶Delete Boot Option

Use this feature to remove a pre-defined boot device from which the system will boot during startup. The settings are [any pre-defined boot device].

▶UEFI Application Boot Priorities

This feature allows the user to specify which UEFI devices are boot devices.

- Boot Option #1

6.8 Save & Exit

Use this tab page to configure Save & Exit settings.

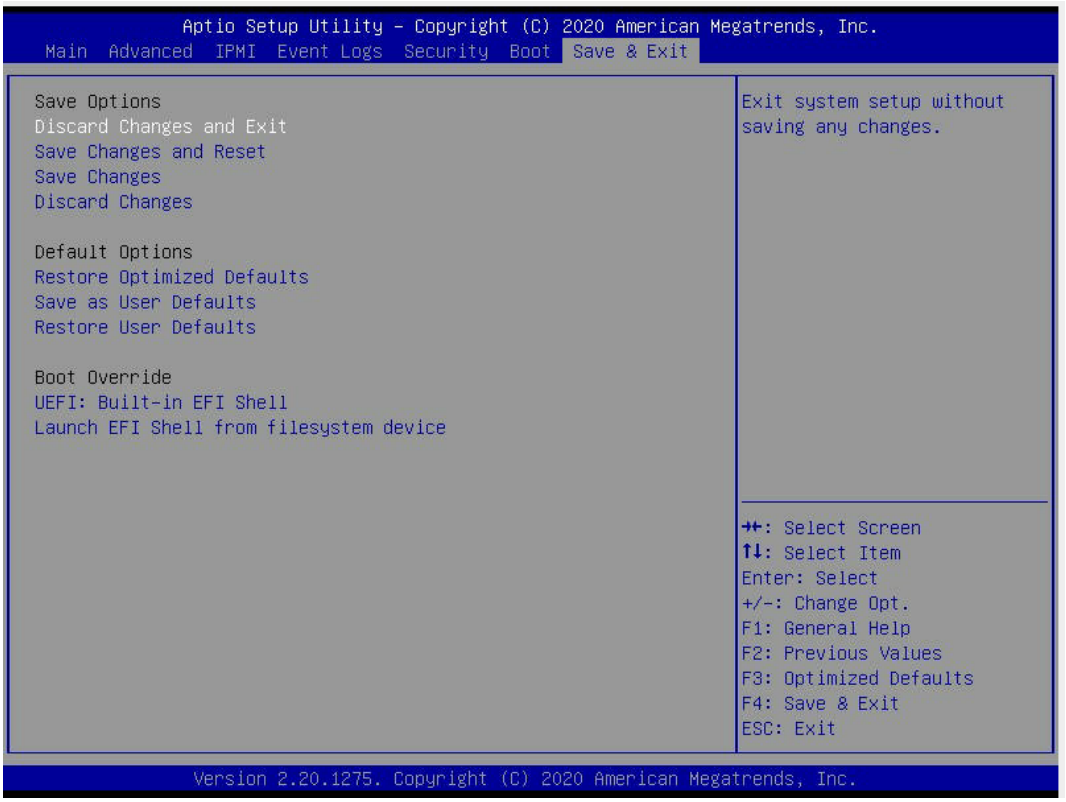

Discard Changes and Exit

Select this option to quit the BIOS Setup without making any permanent changes to the system configuration, and reboot the computer. Select Discard Changes and Exit from the Exit menu and press <Enter>.

Save Changes and Reset

Select this option to reset the system after saving the changes.

Save Changes

After completing the system configuration changes, select this option to save the changes you have made. This will not reset (reboot) the system.

Discard Changes

Select this option and press <Enter> to discard all the changes and return to the AMI BIOS utility Program.

Default Options

Restore Defaults

To set this feature, select Restore Defaults from the Save & Exit menu and press <Enter>. These are factory settings designed for maximum system stability, but not for maximum performance.

Save as User Defaults

To set this feature, select Save as User Defaults from the Exit menu and press <Enter>. This enables the user to save any changes to the BIOS setup for future use.

Restore User Defaults

To set this feature, select Restore User Defaults from the Exit menu and press <Enter>. Use this feature to retrieve user-defined settings that were saved previously.

Boot Override Section

Listed un this section are other boot options for the system (i.e., UEFI: Built-in EFI Shell). Select an option and press <Enter>. Your system will boot to the selected boot option.

6.9 BIOS Update Using IPMI

If necessary, the system BIOS can be updated using IPMI. Documentation on IPMI is available at http://www.supermicro.com/products/nfo/IPMI.cfm.

1. Download the BIOS file using the link on the server web page. Unzip and save it.
2. Access the IPMI web interface. Enter the IP address and log in. The default username and password are ADMIN/ADMIN. (For details on IPMI, use the link above.)
3. Click the **Maintenance** tab, then **BIOS Update**.

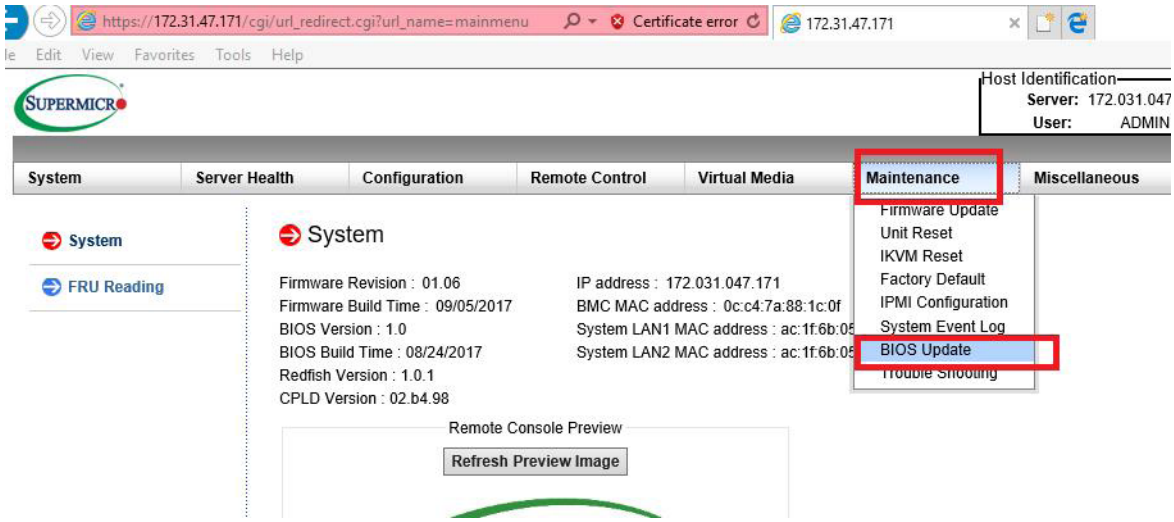

Figure 6-1. IPMI Maintenance Tab

4. **Browse** to select the saved BIOS file and click **Open**.

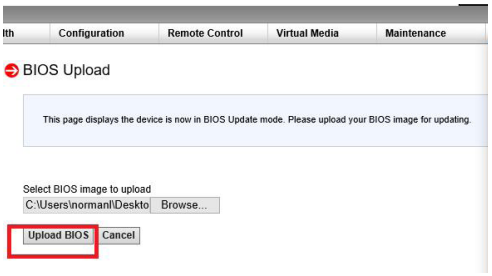

Figure 6-2. Browse and Upload Dialog

5. Click the **Upload BIOS** button. The message appears, "Uploading image & checking BIOS information… Please wait. This may take a while."

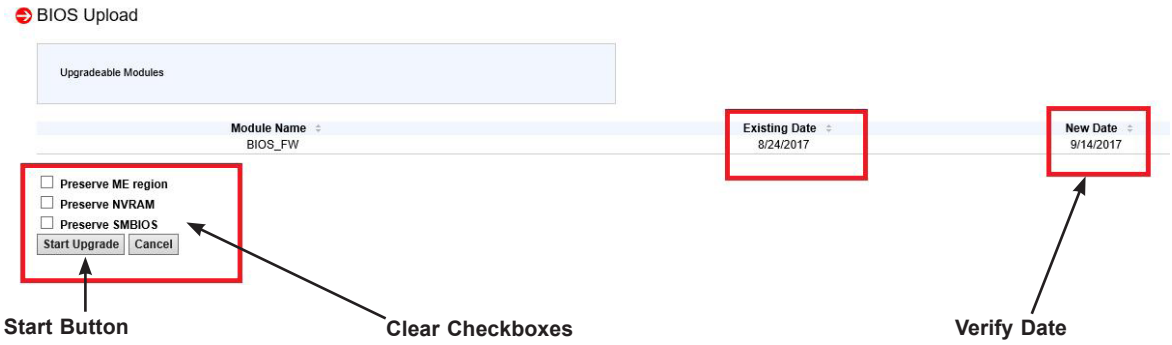

Figure 6-3. Start Upgrade Dialog

6. In the Start Upgrade dialog, make sure the three checkboxes are not checked, and verify the date of the BIOS file you uploaded before proceeding.

7. Click the **Start Upgrade** button.

6.10 UEFI BIOS Recovery

Warning: Do not upgrade the BIOS unless your system has a BIOS-related issue. Flashing the wrong BIOS can cause irreparable damage to the system. In no event shall Supermicro be liable for direct, indirect, special, incidental, or consequential damages arising from a BIOS update. If you do update the BIOS, do not shut down or reset the system while the BIOS is updating. Doing so may cause a boot failure.

Overview

The Unified Extensible Firmware Interface (UEFI) provides a software-based interface between the operating system and the platform firmware in the pre-boot environment. The UEFI specification supports an architecture-independent mechanism that will allow the UEFI OS loader stored in an add-on card to boot the system. The UEFI offers clean, hands-off management to a computer during system boot.

Recovering the UEFI BIOS Image

A UEFI BIOS flash chip consists of a recovery BIOS block and a main BIOS block (a main BIOS image). The boot block contains critical BIOS codes, including memory detection and recovery codes for the user to flash a new BIOS image if the original main BIOS image is corrupted. When the system power is on, the boot block codes execute first. Once it is completed, the main BIOS code will continue with system initialization and bootup.

Recovering the BIOS Block with a USB Device

If the BIOS file is corrupted and the system is not able to boot up, you can recover the BIOS image using a USB-attached device. A USB flash drive or a USB CD/DVD ROM drive may be used for this purpose. Note that a USB hard disk drive is *not* supported.

Recovering the BIOS Block

1. Using a different system, from your driver disk, copy the standard BIOS binary image file into the root directory of a USB flash drive with FAT16 or FAT32 format and rename the file to SUPER.ROM.

   Note: If you cannot locate the SUPER.ROM file in your driver disk, visit our website at www.supermicro.com to download the correct BIOS image into a USB flash device and rename it SUPER.ROM.

2. While the system is turned off, open the chassis and locate the internal USB 3.0 Type-A port on the motherboard. Insert the USB device that contains the new BIOS binary image, SUPER.ROM..
3. Power on the system.



4. After the system is turned on, the system will enter the BIOS Recovery menu. Select "Proceed with flash update" to start the BIOS recovery process. **Caution:** Do not interrupt this process before it finishes.



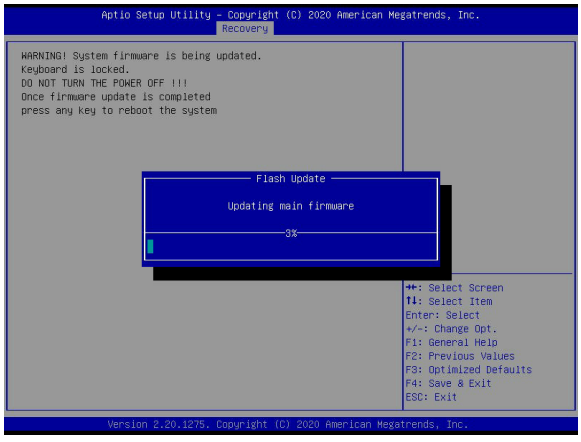

5. After the Boot Sector Recovery Process is complete, press any key to reboot the system.

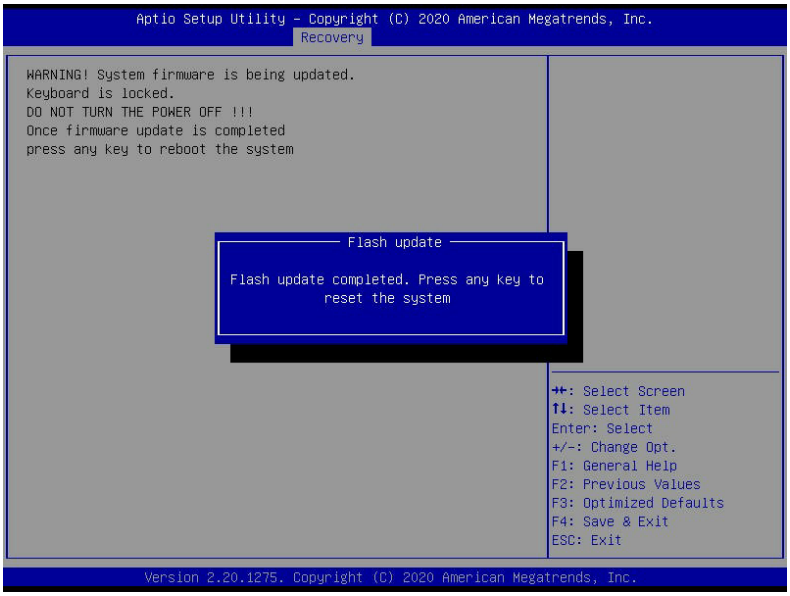

Notes:

- The BIOS recovery (SUPER.ROM) will not work if BIOS has a multi-block crash.
- If you have purchased an OOB license, you can do a BIOS flash again through BMC WebGUI or SUM. Refer to these Supermicro software-related videos:

  Activate OOB license: https://www.youtube.com/watch?v=V4spX_DOV7I

  SUPERMICRO BIOS Update: https://www.youtube.com/watch?v=S8z6iOEHGwY
- If the BIOS flash recovery fails, contact our RMA Department to have the BIOS chip reprogrammed. This will require shipping the board to Supermicro for repair.

  Submit your RMA request at https://www.supermicro.com/support/rma. Please follow all instructions when returning the motherboard.

Appendix A

Standardized Warning Statements for AC Systems

About Standardized Warning Statements

The following statements are industry standard warnings, provided to warn the user of situations which have the potential for bodily injury. Should you have questions or experience difficulty, contact Supermicro's Technical Support department for assistance. Only certified technicians should attempt to install or configure components.

Read this appendix in its entirety before installing or configuring components in the Supermicro chassis.

These warnings may also be found on our website at http://www.supermicro.com/about/policies/safety_information.cfm.

Warning Definition



Warning! This warning symbol means danger. You are in a situation that could cause bodily injury. Before you work on any equipment, be aware of the hazards involved with electrical circuitry and be familiar with standard practices for preventing accidents.

警告の定義

この警告サインは危険を意味します。

人身事故につながる可能性がありますので、いずれの機器でも動作させる前に、

電気回路に含まれる危険性に注意して、標準的な事故防止策に精通して下さい。

此警告符号代表危险。

您正处于可能受到严重伤害的工作环境中。在您使用设备开始工作之前，必须充分意识到触电的危险，并熟练掌握防止事故发生的标准工作程序。请根据每项警告结尾的声明号码找到此设备的安全性警告说明的翻译文本。

此警告符號代表危險。

您正處於可能身體可能會受損傷的工作環境中。在您使用任何設備之前，請注意觸電的危險，並且要熟悉預防事故發生的標準工作程序。請依照每一注意事項後的號碼找到相關的翻譯說明內容。

Warnung

WICHTIGE SICHERHEITSHINWEISE

Dieses Warnsymbol bedeutet Gefahr. Sie befinden sich in einer Situation, die zu Verletzungen führen kann. Machen Sie sich vor der Arbeit mit Geräten mit den Gefahren elektrischer Schaltungen und den üblichen Verfahren zur Vorbeugung vor Unfällen vertraut. Suchen Sie mit der am Ende jeder Warnung angegebenen Anweisungsnummer nach der jeweiligen Übersetzung in den übersetzten Sicherheitshinweisen, die zusammen mit diesem Gerät ausgeliefert wurden.

BEWAHREN SIE DIESE HINWEISE GUT AUF.

INSTRUCCIONES IMPORTANTES DE SEGURIDAD

Este símbolo de aviso indica peligro. Existe riesgo para su integridad física. Antes de manipular cualquier equipo, considere los riesgos de la corriente eléctrica y familiarícese con los procedimientos estándar de prevención de accidentes. Al final de cada advertencia encontrará el número que le ayudará a encontrar el texto traducido en el apartado de traducciones que acompaña a este dispositivo.

GUARDE ESTAS INSTRUCCIONES.

IMPORTANTES INFORMATIONS DE SÉCURITÉ

Ce symbole d'avertissement indique un danger. Vous vous trouvez dans une situation pouvant entraîner des blessures ou des dommages corporels. Avant de travailler sur un équipement, soyez conscient des dangers liés aux circuits électriques et familiarisez-vous avec les procédures couramment utilisées pour éviter les accidents. Pour prendre connaissance des traductions des avertissements figurant dans les consignes de sécurité traduites qui accompagnent cet appareil, référez-vous au numéro de l'instruction situé à la fin de chaque avertissement.

CONSERVEZ CES INFORMATIONS.

תקנון הצהרות אזהרה

הצהרות הבאות הן אזהרות על פי תקני התעשייה, על מנת להזהיר את המשתמש מפני חבלה פיזית אפשרית. במידה ויש שאלות או היתקלות בבעיה כלשהי, יש ליצור קשר עם מחלקת תמיכה טכנית של סופרמיקרו. טכנאים מוסמכים בלבד רשאים להתקין או להגדיר את הרכיבים.

יש לקרוא את הנספח במלואו לפני התקנת או הגדרת הרכיבים במארזי סופרמיקרו.

ا كً ف حالة وٌكي أى تتسبب ف اصابة جسد ةٌ هذا الزهز عٌ خطز !تحذ زٌ .
قبل أى تعول على أي هعذات،كي على علن بالوخاطز ال ٱجوة عي الذوائز
الكهزبائ ةٍ
وكي على درا ةٌ بالووارسات البقائ ةٍ لو عٌ وقع أي حادث
استخذم رقن الب إٍى الو صٌص ف هًا ةٌ كل تحذ زٌ للعشر تزجوتها

안전을 위한 주의사항

경고!

이 경고 기호는 위험이 있음을 알려 줍니다. 작업자의 신체에 부상을 야기 할 수 있는 상태에 있게 됩니다. 모든 장비에 대한 작업을 수행하기 전에 전기회로와 관련된 위험요소들을 확인하시고 사전에 사고를 방지할 수 있도록 표준 작업절차를 준수해 주시기 바랍니다.

해당 번역문을 찾기 위해 각 경고의 마지막 부분에 제공된 경고문 번호를 참조하십시오

BELANGRIJKE VEILIGHEIDSINSTRUCTIES

Dit waarschuwings symbool betekent gevaar. U verkeert in een situatie die lichamelijk letsel kan veroorzaken. Voordat u aan enige apparatuur gaat werken, dient u zich bewust te zijn van de bij een elektrische installatie betrokken risico's en dient u op de hoogte te zijn van de standaard procedures om ongelukken te voorkomen. Gebruik de nummers aan het eind van elke waarschuwing om deze te herleiden naar de desbetreffende locatie.

BEWAAR DEZE INSTRUCTIES

Installation Instructions



Warning! Read the installation instructions before connecting the system to the power source.

設置手順書

システムを電源に接続する前に、設置手順書をお読み下さい。

警告

将此系统连接电源前,请先阅读安装说明。

警告

將系統與電源連接前，請先閱讀安裝說明。

Warnung

Vor dem Anschließen des Systems an die Stromquelle die Installationsanweisungen lesen.

¡Advertencia!

Lea las instrucciones de instalación antes de conectar el sistema a la red de alimentación.

Attention

Avant de brancher le système sur la source d'alimentation, consulter les directives d'installation.

יש לקרוא את הוראות התקנה לפני חיבור המערכת למקור מתח.

اقر إرشادات التركيب قبل توصيل النظام إلى مصدر للطاقة

시스템을 전원에 연결하기 전에 설치 안내를 읽어주십시오.

Waarschuwing

Raadpleeg de installatie-instructies voordat u het systeem op de voedingsbron aansluit.

Circuit Breaker



Warning! This product relies on the building's installation for short-circuit (overcurrent) protection. Ensure that the protective device is rated not greater than: 250 V, 20 A.

サーキット・ブレーカー

この製品は、短絡（過電流）保護装置がある建物での設置を前提としています。

保護装置の定格が250 V、20 Aを超えないことを確認下さい。

警告

此产品的短路(过载电流)保护由建筑物的供电系统提供,确保短路保护设备的额定电流不大于250V,20A。

警告

此產品的短路(過載電流)保護由建築物的供電系統提供,確保短路保護設備的額定電流不大於250V,20A。

Warnung

Dieses Produkt ist darauf angewiesen, dass im Gebäude ein Kurzschluss- bzw. Überstromschutz installiert ist. Stellen Sie sicher, dass der Nennwert der Schutzvorrichtung nicht mehr als: 250 V, 20 A beträgt.

¡Advertencia!

Este equipo utiliza el sistema de protección contra cortocircuitos (o sobrecorrientes) del edificio. Asegúrese de que el dispositivo de protección no sea superior a: 250 V, 20 A.

Attention

Pour ce qui est de la protection contre les courts-circuits (surtension), ce produit dépend de l'installation électrique du local. Vérifiez que le courant nominal du dispositif de protection n'est pas supérieur à :250 V, 20 A.

מוצר זה מסתמך על הגנה המותקנת במבנים למניעת קצר חשמלי. יש לוודא כי
המכשיר המגן מפני הקצר החשמלי הוא לא יותר מ-250VDC, 20A

هذا المنتج يعتمد على معداث الحمايت مه الدوائرالقصيرة التي تم تثبيتها في
المبنى
تأكد من أن تقييم الجهاز الوقائي ليس أكثر من : 20A, 250V

경고!

이 제품은 전원의 단락(과전류)방지에 대해서 전적으로 건물의 관련 설비에 의존합니다.
보호장치의 정격이 반드시 250V(볼트), 20A(암페어)를 초과하지 않도록 해야 합니다.

Waarschuwing

Dit product is afhankelijk van de kortsluitbeveiliging (overspanning) van uw electrische installatie. Controleer of het beveiligde aparaat niet groter gedimensioneerd is dan 250V, 20A.

Power Disconnection Warning

Warning! The system must be disconnected from all sources of power and the power cord removed from the power supply module(s) before accessing the chassis interior to install or remove system components.



電源切断の警告

システムコンポーネントの取り付けまたは取り外しのために、シャーシー内部にアクセスするには、

システムの電源はすべてのソースから切断され、電源コードは電源モジュールから取り外す必要があります。

警告

在你打开机箱并安装或移除内部器件前,必须将系统完全断电,并移除电源线。

警告

在您打開機殼安裝或移除內部元件前，必須將系統完全斷電，並移除電源線。

Warnung

Das System muss von allen Quellen der Energie und vom Netzanschlusskabel getrennt sein, das von den Spg.Versorgungsteilmodulen entfernt wird, bevor es auf den Chassisinnenraum zurückgreift, um Systemsbestandteile anzubringen oder zu entfernen.

¡Advertencia!

El sistema debe ser disconnected de todas las fuentes de energía y del cable eléctrico quitado de los módulos de fuente de alimentación antes de tener acceso el interior del chasis para instalar o para quitar componentes de sistema.

Attention

Le système doit être débranché de toutes les sources de puissance ainsi que de son cordon d'alimentation secteur avant d'accéder à l'intérieur du chassis pour installer ou enlever des composants de systéme.

אזהרה מפני ניתוק חשמלי

!אזהרה

יש לנתק את המערכת מכל מקורות החשמל ויש להסיר את כבל החשמלי מהספק

.לפני גישה לחלק הפנימי של המארז לצורך התקנת או הסרת רכיבים

يجب فصم انتظاو من جميع مصادر انطاقت وإزانت سهك انكهرباء من وحدة امداد

انطاقت قبم

انصل إنى انمناطق انداخهيت نههيكم نتثبيج أو إزانت مكناث الجهاز

경고!

시스템에 부품들을 장착하거나 제거하기 위해서는 섀시 내부에 접근하기 전에 반드시 전원 공급장치로부터 연결되어있는 모든 전원과 전기코드를 분리해주어야 합니다.

Waarschuwing

Voordat u toegang neemt tot het binnenwerk van de behuizing voor het installeren of verwijderen van systeem onderdelen, dient u alle spanningsbronnen en alle stroomkabels aangesloten op de voeding(en) van de behuizing te verwijderen

Equipment Installation



Warning! Only trained and qualified personnel should be allowed to install, replace, or service this equipment.

機器の設置

トレーニングを受け認定された人だけがこの装置の設置、交換、またはサービスを許可されています。

警告

只有经过培训且具有资格的人员才能进行此设备的安装、更换和维修。

警告

只有經過受訓且具資格人員才可安裝、更換與維修此設備。

Warnung

Das Installieren, Ersetzen oder Bedienen dieser Ausrüstung sollte nur geschultem, qualifiziertem Personal gestattet werden.

¡Advertencia!

Solamente el personal calificado debe instalar, reemplazar o utilizar este equipo.

Attention

Il est vivement recommandé de confier l'installation, le remplacement et la maintenance de ces équipements à des personnels qualifiés et expérimentés.

אזהרה!

צוות מוסמך בלבד רשאי להתקין, להחליף את הציוד או לתת שירות עבור הציוד.

والمدربيه لتزكيب واستبدال أو خدمة هذا الجهاس يجب أن يسمح فقط للمظفيه المؤهليه

경고!

훈련을 받고 공인된 기술자만이 이 장비의 설치, 교체 또는 서비스를 수행할 수 있습니다.

Waarschuwing

Deze apparatuur mag alleen worden geïnstalleerd, vervangen of hersteld door geschoold en gekwalificeerd personeel.

Restricted Area



Warning! This unit is intended for installation in restricted access areas. A restricted access area can be accessed only through the use of a special tool, lock and key, or other means of security. (This warning does not apply to workstations).

アクセス制限区域

このユニットは、アクセス制限区域に設置されることを想定しています。

アクセス制限区域は、特別なツール、鍵と錠前、その他のセキュリティの手段を用いてのみ出入りが可能です。

警告

此部件应安装在限制进出的场所，限制进出的场所指只能通过使用特殊工具、锁和钥匙或其它安全手段进出的场所。

警告

此裝置僅限安裝於進出管制區域，進出管制區域係指僅能以特殊工具、鎖頭及鑰匙或其他安全方式才能進入的區域。

Warnung

Diese Einheit ist zur Installation in Bereichen mit beschränktem Zutritt vorgesehen. Der Zutritt zu derartigen Bereichen ist nur mit einem Spezialwerkzeug, Schloss und Schlüssel oder einer sonstigen Sicherheitsvorkehrung möglich.

¡Advertencia!

Esta unidad ha sido diseñada para instalación en áreas de acceso restringido. Sólo puede obtenerse acceso a una de estas áreas mediante la utilización de una herramienta especial, cerradura con llave u otro medio de seguridad.

Attention

Cet appareil doit être installée dans des zones d'accès réservés. L'accès à une zone d'accès réservé n'est possible qu'en utilisant un outil spécial, un mécanisme de verrouillage et une clé, ou tout autre moyen de sécurité.

אזור עם גישה מוגבלת

אזהרה!

יש להתקין את היחידה באזורים שיש בהם הגבלת גישה. הגישה ניתנת בעזרת
'כלי אבטחה בלבד)מפתח, מנעול וכד.)

تخصيص هذه انحذة نترك بُها ف مناطق محظورة تم .
،مَكن انصبل إن منطقت محظورة فقط من خلال استخذاو أداة خاصت
أو أ وس هُت أخري نلالأمما قفم ومفتاح

경고!

이 장치는 접근이 제한된 구역에 설치하도록 되어있습니다. 특수도구, 잠금 장치 및 키, 또는 기타 보안 수단을 통해서만 접근 제한 구역에 들어갈 수 있습니다.

Waarschuwing

Dit apparaat is bedoeld voor installatie in gebieden met een beperkte toegang. Toegang tot dergelijke gebieden kunnen alleen verkregen worden door gebruik te maken van speciaal gereedschap, slot en sleutel of andere veiligheidsmaatregelen.

Battery Handling



Warning! There is the danger of explosion if the battery is replaced incorrectly. Replace the battery only with the same or equivalent type recommended by the manufacturer. Dispose of used batteries according to the manufacturer's instructions

電池の取り扱い

電池交換が正しく行われなかった場合、破裂の危険性があります。交換する電池はメーカーが推奨する型、または同等のものを使用下さい。使用済電池は製造元の指示に従って処分して下さい。

警告

电池更换不当会有爆炸危险。请只使用同类电池或制造商推荐的功能相当的电池更换原有电池。请按制造商的说明处理废旧电池。

警告

電池更換不當會有爆炸危險。請使用製造商建議之相同或功能相當的電池更換原有電池。請按照製造商的說明指示處理廢棄舊電池。

Warnung

Bei Einsetzen einer falschen Batterie besteht Explosionsgefahr. Ersetzen Sie die Batterie nur durch den gleichen oder vom Hersteller empfohlenen Batterietyp. Entsorgen Sie die benutzten Batterien nach den Anweisungen des Herstellers.

Attention

Danger d'explosion si la pile n'est pas remplacée correctement. Ne la remplacer que par une pile de type semblable ou équivalent, recommandée par le fabricant. Jeter les piles usagées conformément aux instructions du fabricant.

¡Advertencia!

Existe peligro de explosión si la batería se reemplaza de manera incorrecta. Reemplazar la batería exclusivamente con el mismo tipo o el equivalente recomendado por el fabricante. Desechar las baterías gastadas según las instrucciones del fabricante.

!אזהרה

קיימת סכנת פיצוץ של הסוללה במידה והוחלפה בדרך לא תקינה. יש להחליף
את הסוללה בסוג התואם מחברת יצרן מומלצת.
סילוק הסוללות המשומשות יש לבצע לפי הוראות היצרן.

هناك خطر من انفجار في حالة اسحبذال البطارية بطريقة غير صحيحة فعليل
اسحبذال البطارية
فقط بنفس النع أو ما يعادلها مما أوصث به الشرمة المصنعة
جخلص من البطاريات المسحعملة وفقا لحعليمات الشرمة الصانعة

경고!

배터리가 올바르게 교체되지 않으면 폭발의 위험이 있습니다. 기존 배터리와 동일하거나 제조사에서 권장하는 동등한 종류의 배터리로만 교체해야 합니다. 제조사의 안내에 따라 사용된 배터리를 처리하여 주십시오.

Waarschuwing

Er is ontploffingsgevaar indien de batterij verkeerd vervangen wordt. Vervang de batterij slechts met hetzelfde of een equivalent type die door de fabrikant aanbevolen wordt. Gebruikte batterijen dienen overeenkomstig fabrieksvoorschriften afgevoerd te worden.

Redundant Power Supplies



Warning! This unit might have more than one power supply connection. All connections must be removed to de-energize the unit.

冗長電源装置

このユニットは複数の電源装置が接続されている場合があります。

ユニットの電源を切るためには、すべての接続を取り外さなければなりません。

警告
此部件连接的电源可能不止一个，必须将所有电源断开才能停止给该部件供电。

警告
此裝置連接的電源可能不只一個，必須切斷所有電源才能停止對該裝置的供電。

Warnung

Dieses Gerät kann mehr als eine Stromzufuhr haben. Um sicherzustellen, dass der Einheit kein trom zugeführt wird, müssen alle Verbindungen entfernt werden.

¡Advertencia!

Puede que esta unidad tenga más de una conexión para fuentes de alimentación. Para cortar por completo el suministro de energía, deben desconectarse todas las conexiones.

Attention

Cette unité peut avoir plus d'une connexion d'alimentation. Pour supprimer toute tension et tout courant électrique de l'unité, toutes les connexions d'alimentation doivent être débranchées.

אם קיים יותר מספק אחד

אזהרה!

ליחדה יש יותר מחיבור אחד של ספק. יש להסיר את כל החיבורים על מנת לרוקן את היחידה.

قد يكون لهذا الجهاز عدة اتصالات بوحدات امداد الطاقة .

يجب إزالة كافة الاتصالات لعسل الوحدة عن الكهرباء

경고!

이 장치에는 한 개 이상의 전원 공급 단자가 연결되어 있을 수 있습니다. 이 장치에 전원을 차단하기 위해서는 모든 연결 단자를 제거해야만 합니다.

Waarschuwing

Deze eenheid kan meer dan één stroomtoevoeraansluiting bevatten. Alle aansluitingen dienen verwijderd te worden om het apparaat stroomloos te maken.

Backplane Voltage



Warning! Hazardous voltage or energy is present on the backplane when the system is operating. Use caution when servicing.

バックプレーンの電圧

システムの稼働中は危険な電圧または電力が、バックプレーン上にかかっています。

修理する際には注意ください。

警告

当系统正在进行时，背板上有很危险的电压或能量，进行维修时务必小心。

警告

當系統正在進行時，背板上有危險的電壓或能量，進行維修時務必小心。

Warnung

Wenn das System in Betrieb ist, treten auf der Rückwandplatine gefährliche Spannungen oder Energien auf. Vorsicht bei der Wartung.

¡Advertencia!

Cuando el sistema está en funcionamiento, el voltaje del plano trasero es peligroso. Tenga cuidado cuando lo revise.

Attention

Lorsque le système est en fonctionnement, des tensions électriques circulent sur le fond de panier. Prendre des précautions lors de la maintenance.

מתח בפנל האחורי

אזהרה!

קיימת סכנת מתח בפנל האחורי בזמן תפעול המערכת. יש להיזהר במהלך העבודה.

هناك خطر مه التيار الكهزبائي أوالطاقة المجبدة على اللحة
عندما يكن النظام يعمل كه حذرا عند خدمة هذا الجهاس

경고!

시스템이 동작 중일 때 후면판 (Backplane)에는 위험한 전압이나 에너지가 발생 합니다. 서비스 작업 시 주의하십시오.

Waarschuwing

Een gevaarlijke spanning of energie is aanwezig op de backplane wanneer het systeem in gebruik is. Voorzichtigheid is geboden tijdens het onderhoud.

Comply with Local and National Electrical Codes



Warning! Installation of the equipment must comply with local and national electrical codes.

地方および国の電気規格に準拠

機器の取り付けはその地方および国の電気規格に準拠する必要があります。

警告

设备安装必须符合本地与本国电气法规。

警告

設備安裝必須符合本地與本國電氣法規。

Warnung

Die Installation der Geräte muss den Sicherheitsstandards entsprechen.

¡Advertencia!

La instalacion del equipo debe cumplir con las normas de electricidad locales y nacionales.

Attention

L'équipement doit être installé conformément aux normes électriques nationales et locales.

תיאום חוקי החשמל הארצי
אזהרה!
התקנת הציוד חייבת להיות תואמת לחוקי החשמל המקומיים והארציים.

تركيب المعدات الكهربائية يجب أن يمتثل للقاويه المحلية والبطية المتعلقة
بالكهرباء

경고!
현 지역 및 국가의 전기 규정에 따라 장비를 설치해야 합니다.

Waarschuwing
Bij installatie van de apparatuur moet worden voldaan aan de lokale en nationale elektriciteitsvoorschriften.

Product Disposal



Warning! Ultimate disposal of this product should be handled according to all national laws and regulations.

製品の廃棄
この製品を廃棄処分する場合、国の関係する全ての法律・条例に従い処理する必要があります。

警告
本产品的废弃处理应根据所有国家的法律和规章进行。

警告
本產品的廢棄處理應根據所有國家的法律和規章進行。

Warnung
Die Entsorgung dieses Produkts sollte gemäß allen Bestimmungen und Gesetzen des Landes erfolgen.

¡Advertencia!
Al deshacerse por completo de este producto debe seguir todas las leyes y reglamentos nacionales.

Attention

La mise au rebut ou le recyclage de ce produit sont généralement soumis à des lois et/ou directives de respect de l'environnement. Renseignez-vous auprès de l'organisme compétent.

סילוק המוצר

אזהרה!

סילוק סופי של מוצר זה חייב להיות בהתאם להנחיות וחוקי המדינה.

التخلص النهائي من هذا المنتج ينبغي التعامل معه وفقا لجميع القانين واللائح البطنية عند

경고!

이 제품은 해당 국가의 관련 법규 및 규정에 따라 폐기되어야 합니다.

Waarschuwing

De uiteindelijke verwijdering van dit product dient te geschieden in overeenstemming met alle nationale wetten en reglementen.

Hot Swap Fan Warning



Warning! Hazardous moving parts. Keep away from moving fan blades. The fans might still be turning when you remove the fan assembly from the chassis. Keep fingers, screwdrivers, and other objects away from the openings in the fan assembly's housing.

ファン・ホットスワップの警告

警告！回転部品に注意。運転中は回転部(羽根)に触れないでください。シャーシから冷却ファン装置を取り外した際、ファンがまだ回転している可能性があります。ファンの開口部に、指、ドライバー、およびその他のものを近づけないで下さい。

警告!

警告！危险的可移动性零件。请务必与转动的风扇叶片保持距离。 当您从机架移除风扇装置，风扇可能仍在转动。小心不要将手指、螺丝起子和其他物品太靠近风扇

警告

危險的可移動性零件。請務必與轉動的風扇葉片保持距離。 當您從機架移除風扇裝置，風扇可能仍在轉動。小心不要將手指、螺絲起子和其他物品太靠近風扇。

Warnung

Gefährlich Bewegende Teile. Von den bewegenden Lüfterblätter fern halten. Die Lüfter drehen sich u. U. noch, wenn die Lüfterbaugruppe aus dem Chassis genommen wird. Halten Sie Finger, Schraubendreher und andere Gegenstände von den Öffnungen des Lüftergehäuses entfernt.

¡Advertencia!

Riesgo de piezas móviles. Mantener alejado de las aspas del ventilador. Los ventiladores podran dar vuelta cuando usted quite ell montaje del ventilador del chasis. Mandtenga los dedos, los destornilladores y todos los objetos lejos de las aberturas del ventilador

Attention

Pieces mobiles dangereuses. Se tenir a l'ecart des lames du ventilateur Il est possible que les ventilateurs soient toujours en rotation lorsque vous retirerez le bloc ventilateur du châssis. Prenez garde à ce que doigts, tournevis et autres objets soient éloignés du logement du bloc ventilateur.

אזהרה!

חלקים נעים מסוכנים. התרחק מלהבי המאוורר בפעולהכאשר מסירים את חלקי
המאוורר מהמארז, יתכן והמאוררים עדיין עובדים. יש להרחיק למרחק בטוח את
האצבעות וכלי עבודה שונים מהפתחים בתוך המאוורר

تحذير! أجزاء متحركة خطرة. ابتعد عن شفرات المروحة المتحركة.من الممكن أن
المراوح لا تزال تدورعند إزالة كتلة المروحة من الهيكل يجب إبقاء الأصابع
.ومفكات البراغي وغيرها من الأشياء بعيدا عن الفتحات في كتلة المروحة

경고!

움직이는 위험한 부품. 회전하는 송풍 날개에 접근하지 마세요. 섀시로부터 팬 조립품을 제거할 때 팬은 여전히 회전하고 있을 수 있습니다. 팬 조림품 외관의 열려있는 부분들로부터 손가락 및 스크류드라이버, 다른 물체들이 가까이 하지 않도록 배치해 주십시오.

Waarschuwing

Gevaarlijk bewegende onderdelen. Houd voldoende afstand tot de bewegende ventilatorbladen. Het is mogelijk dat de ventilator nog draait tijdens het verwijderen van het ventilatorsamenstel uit het chassis. Houd uw vingers, schroevendraaiers en eventuele andere voorwerpen uit de buurt van de openingen in de ventilatorbehuizing.

Power Cable and AC Adapter



Warning! When installing the product, use the provided or designated connection cables, power cables and AC adaptors. Using any other cables and adaptors could cause a malfunction or a fire. Electrical Appliance and Material Safety Law prohibits the use of UL or CSA -certified cables (that have UL/CSA shown on the cord) for any other electrical devices than products designated by Supermicro only.

電源コードとACアダプター

製品を設置する場合、提供または指定および購入された接続ケーブル、電源コードとACアダプターを 該当する地域の条例や安全基準に適合するコードサイズやプラグと共に使用下さい。他のケーブルやアダプタを使用すると故障や火災の原因になることがあります。

電気用品安全法は、ULまたはCSA認定のケーブル(UL/CSAマークがコードに表記)を Supermicroが指定する製品以外に使用することを禁止しています。

警告

安装此产品时,请使用本身提供的或指定的或采购的连接线,电源线和电源适配器，包含遵照当地法规和安全要求的合规的电源线尺寸和插头.使用其它线材或适配器可能会引起故障或火灾。除了Supermicro所指定的产品,电气用品和材料安全法律规定禁止
使用未经UL或CSA认证的线材。(线材上会显示UL/CSA符号)。

警告

安裝此產品時,請使用本身提供的或指定的或採購的連接線,電源線和電源適配器，包含遵照當地法規和安全要求的合規的電源線尺寸和插頭.使用其它線材或適配器可能會引起故障或火災。除了Supermicro所指定的產品,電氣用品和材料安全法律規定禁止
使用未經UL或CSA認證的線材。 (線材上會顯示UL/CSA符號)。

Warnung

Nutzen Sie beim Installieren des Produkts ausschließlich die von uns zur Verfügung gestellten Verbindungskabeln, Stromkabeln und/oder Adapater, die Ihre örtlichen Sicherheitsstandards einhalten. Der Gebrauch von anderen Kabeln und Adapter können Fehlfunktionen oder Feuer verursachen. Die Richtlinien untersagen das Nutzen von UL oder CAS zertifizierten Kabeln (mit UL/CSA gekennzeichnet), an Geräten oder Produkten die nicht mit Supermicro gekennzeichnet sind.

¡Advertencia!

Cuando instale el producto, utilice la conexión provista o designada o procure cables, Cables de alimentación y adaptadores de CA que cumplan con los códigos locales y los requisitos de seguridad, incluyendo el tamaño adecuado del cable y el enchufe. El uso de otros cables y adaptadores podría causar un mal funcionamiento o un incendio. La Ley de Seguridad de Aparatos Eléctricos y de Materiales prohíbe El uso de cables certificados por UL o CSA (que tienen el certificado UL / CSA en el código) para cualquier otros dispositivos eléctricos que los productos designados únicamente por Supermicro.

Attention

Lors de l'installation du produit, utilisez les cables de connection fournis ou désigné ou achetez des cables, cables de puissance et adaptateurs respectant les normes locales et les conditions de securite y compris les tailles de cables et les prises electriques appropries. L'utilisation d'autres cables et adaptateurs peut provoquer un dysfonctionnement ou un incendie. Appareils électroménagers et la Loi sur la Sécurité Matériel interdit l'utilisation de câbles certifies- UL ou CSA (qui ont UL ou CSA indiqué sur le code) pour tous les autres appareils électriques sauf les produits désignés par Supermicro seulement.

AC ימאתמו סיילמשח סילבכ

!הרהזא

רזוצל ומאתוה וא ושכרנ רשא AC סימאתמו סיקפס ,סילבכב שמתשהל שי ,רצומה תא סיניקתמ רשאכ לכב שומיש . עקתהו לבכה לש הנוכנ הדימ ללוכ ,תוימוקמה תוחיטבה תושירדל ומאתוה רשאו ,הנקתהה למשחה יריש כמב שומישה יקוחל סאתהב .ילמשח רצק וא הלקתל סורגל לולע ,רחא גוסמ סאתמ וא לבכ לש דוק סהילע עיפומ רשאכ) CSA-ב וא UL -ב סיכמסומה סילבכב שמתשהל רוסיא סייק ,תוחיטבה יקוחו .דבלב Supermicro י"ע סאתוה רשא רצומב קר אלא ,רחא ילמשח רצומ לכ רובע UL/CSA)

عند تركيب المنتج، قم باستخدام التوصيلات المتوفرة أو المحددة أو قم بشراء الكابلات الكهربائية ومحولات التيار المتردد مع الالتزام بقوانين ومتطلبات السلامة المحلية بما في ذلك حجم الموصل والقابس السليم. استخدام أي كابلات ومحولات أخرى قد يتسبب في عطل أو حريق. يحظر قانون السلامة للأجهزة الكهربائية والمعدات استخدام الكابلات المعتمدة من قبل UL أو CSA لأي منتجات المعينة والمحددة من قبل Supermicro. والتي تحمل علامة (UL/CSA) مع أي معدات أخرى غير

전원 케이블 및 AC 어댑터

경고! 제품을 설치할 때 현지 코드 및 적절한 굵기의 코드와 플러그를 포함한 안전 요구 사항을 준수하여 제공되거나 지정된 연결 혹은 구매 케이블, 전원 케이블 및 AC 어댑터를 사용하십시오.

다른 케이블이나 어댑터를 사용하면 오작동이나 화재가 발생할 수 있습니다. 전기 용품 안전법은 UL 또는 CSA 인증 케이블 (코드에 UL / CSA가 표시된 케이블)을 Supermicro 가 지정한 제품 이외의 전기 장치에 사용하는 것을 금지합니다.

Stroomkabel en AC-Adapter

Waarschuwing! Bij het aansluiten van het Product uitsluitend gebruik maken van de geleverde Kabels of een andere geschikte aan te schaffen Aansluitmethode, deze moet altijd voldoen aan de lokale voorschriften en veiligheidsnormen, inclusief de juiste kabeldikte en stekker. Het gebruik van niet geschikte Kabels en/of Adapters kan een storing of brand veroorzaken. Wetgeving voor Elektrische apparatuur en Materiaalveiligheid verbied het gebruik van UL of CSA -gecertificeerde Kabels (met UL/CSA in de code) voor elke andere toepassing dan de door Supermicro hiervoor beoogde Producten.

Appendix B

System Specifications

Processors

Dual AMD EPYC 7003/7002 series in SP3 type sockets; System on Chip (7003 Series Processor drop-in support requires BIOS version 2.0 or newer)

BIOS

128Mb SPI AMI BIOS SM Flash UEFI BIOS

Memory

Up to 8 TB of ECC DDR4 3200 MHz speed, RDIMM/LRDIMM/3DS/NVDIMM memory in 32 slots

SATA Controller

On-chip

Storage Drives

Twenty-four hot-swap 2.5" U.2 NVMe drive bays; all can support SAS/SATA with an optional SAS kit
M.2 SSDs can be added with optional add-on cards, two M.2s per card

PCI Expansion Slots

One double-width, full-height, full-length x16 PCIe 4.0 slot

Input/Output

LAN: Network ports by means of the Ultra Riser card; one dedicated BMC port
USB 3.0:
Two ports on the rear I/O panel (USB0/1)
One type A header (Internal)
Two SATA DOM (Device on Module) power connectors
One COM port, One VGA port

Motherboard

H12DSU-iN; 17" x 16.8" (431.8 mm x 426.72 mm)

Chassis

CSE-219U2TS-R1K62P3-TN24; 2U rackmount, (WxHxD) 17.2 x 3.5 x 27.8 in. (437 x 86 x 705 mm)

Weight

Net Weight: 39 lbs (17.7 kg)
Gross Weight: 63 lbs (28.6 kg)

System Cooling

Four mid-chassis 8-cm fans; two air shrouds, two CPU heatsinks

Power Supply

Model: PWS-1K62A-1R, redundant 80Plus Titanium level modules, Redundant Power Supplies with PMBus
Total Output Power: 1600W/1000W
Input:
100-127Vac / 9.8 - 7A / 50-60Hz
200-240Vac / 7 - 5A / 50-60Hz
+12V Output:
Max: 83.3A / Min: 0A (100-127Vac)
Max: 133A / Min: 0A (200-240Vac)
12Vsb • Max: 2.1A / Min: 0A

Operating Environment

Operating Temperature: 10º to 35º C (50º to 95º F)
Non-operating Temperature: -40º to 70º C (-40º to 158º F)
Operating Relative Humidity: 8% to 90% (non-condensing)
Non-operating Relative Humidity: 5% to 95% (non-condensing)

Regulatory Compliance

FCC, ICES, CE, VCCI, RCM, UKCA, NRTL, CB

Applied Directives, Standards

EMC/EMI: 2014/30/EU (EMC Directive)
Electromagnetic Compatibility Regulations 2016
FCC Part 15
ICES-003
VCCI-CISPR 32
AS/NZS CISPR 32
BS/EN55032
BS/EN55035
CISPR 32
CISPR 24/CISPR 35
BS/EN 61000-3-2
BS/EN 61000-3-3
BS/EN 61000-4-2
BS/EN 61000-4-3
BS/EN 61000-4-4
BS/EN 61000-4-5
BS/EN 61000-4-6
BS/EN 61000-4-8
BS/EN 61000-4-11

Environment:
2011/65/EU (RoHS Directive)
EC 1907/2006 (REACH)
2012/19/EU (WEEE Directive)
California Proposition 65

Product Safety: 2014/35/EU (LVD Directive)
UL/CSA 62368-1 (USA and Canada)
Electrical Equipment (Safety) Regulations 2016
IEC/BS/EN 62368-1

Perchlorate Warning

California Best Management Practices Regulations for Perchlorate Materials: This Perchlorate warning applies only to products containing CR (Manganese Dioxide) Lithium coin cells. “Perchlorate Material-special handling may apply. See www.dtsc.ca.gov/hazardouswaste/perchlorate”

Appendix C

IPMI Crash Dump

In the event of a processor internal error (IERR) that crashes your system, you may want to provide information to support staff. You can download a crash dump of status information using IPMI. The IPMI manual is available at https://www.supermicro.com/solutions/IPMI.cfm.

Check IPMI Error Log

1. Access the IPMI web interface.
2. Click the **Server Health** tab, then **Event Log** to verify an IERR error.

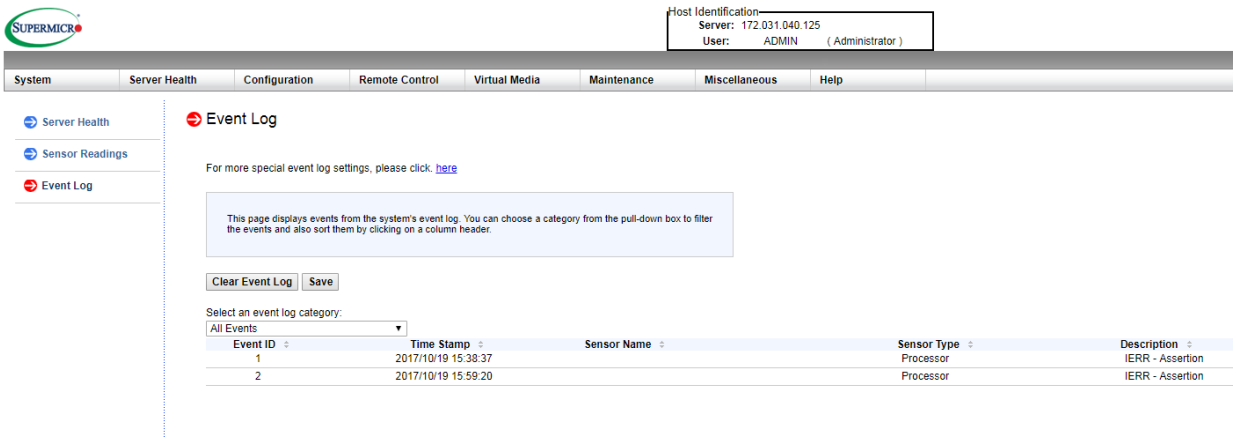

Figure C-1. IPMI Event Log

In the event of an IERR, the BMC executes a crash dump. You must download the crash dump and save it.

Downloading the Crash Dump File

1. In the IPMI interface, click the **Miscellaneous** tab, then the **Trouble Shooting** option.
2. Click the **Dump** button and wait five minutes for the file to be created. (No confirmation message will appear.)
3. Click the **Download** button and a Save As dialog appears.
4. Save the zipped dump file, noting the name and location.

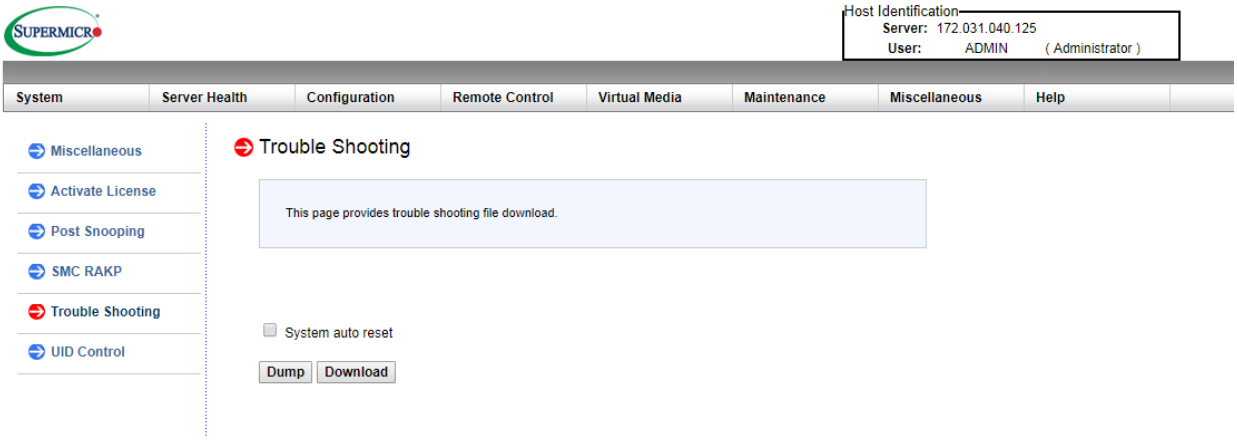

Figure C-2. IPMI Crash Dump Download

Note: The **System auto reset** check box dictates behavior after an IERR. If checked, the system will restart automatically, and the dump file will be erased. If not, the system remains in a failed state. Do not check this box until after the dump file has been sent to Support.