A+ Server®
AS -2115HS-TNR

USER'S MANUAL

Revision 1.1a

The information in this User's Manual has been carefully reviewed and is believed to be accurate. The vendor assumes no responsibility for any inaccuracies that may be contained in this document, and makes no commitment to update or to keep current the information in this manual, or to notify any person or organization of the updates. Please Note: For the most up-to-date version of this manual, please see our website at www.supermicro.com.

Super Micro Computer, Inc. ("Supermicro") reserves the right to make changes to the product described in this manual at any time and without notice. This product, including software and documentation, is the property of Supermicro and/or its licensors, and is supplied only under a license. Any use or reproduction of this product is not allowed, except as expressly permitted by the terms of said license.

IN NO EVENT WILL Super Micro Computer, Inc. BE LIABLE FOR DIRECT, INDIRECT, SPECIAL, INCIDENTAL, SPECULATIVE OR CONSEQUENTIAL DAMAGES ARISING FROM THE USE OR INABILITY TO USE THIS PRODUCT OR DOCUMENTATION, EVEN IF ADVISED OF THE POSSIBILITY OF SUCH DAMAGES. IN PARTICULAR, SUPER MICRO COMPUTER, INC. SHALL NOT HAVE LIABILITY FOR ANY HARDWARE, SOFTWARE, OR DATA STORED OR USED WITH THE PRODUCT, INCLUDING THE COSTS OF REPAIRING, REPLACING, INTEGRATING, INSTALLING OR RECOVERING SUCH HARDWARE, SOFTWARE, OR DATA.

Any disputes arising between manufacturer and customer shall be governed by the laws of Santa Clara County in the State of California, USA. The State of California, County of Santa Clara shall be the exclusive venue for the resolution of any such disputes. Supermicro's total liability for all claims will not exceed the price paid for the hardware product.

FCC Statement: This equipment has been tested and found to comply with the limits for a Class A or Class B digital device pursuant to Part 15 of the FCC Rules. These limits are designed to provide reasonable protection against harmful interference when the equipment is operated in industrial environment for Class A device or in residential environment for Class B device. This equipment generates, uses, and can radiate radio frequency energy and, if not installed and used in accordance with the manufacturer's instruction manual, may cause harmful interference with radio communications. Operation of this equipment in a residential area is likely to cause harmful interference, in which case you will be required to correct the interference at your own expense.

California Best Management Practices Regulations for Perchlorate Materials: This Perchlorate warning applies only to products containing CR (Manganese Dioxide) Lithium coin cells. "Perchlorate Material-special handling may apply. See www.dtsc.ca.gov/hazardouswaste/perchlorate".

WARNING: This product can expose you to chemicals including lead, known to the State of California to cause cancer and birth defects or other reproductive harm. For more information, go to www.P65Warnings.ca.gov.

The products sold by Supermicro are not intended for and will not be used in life support systems, medical equipment, nuclear facilities or systems, aircraft, aircraft devices, aircraft/emergency communication devices or other critical systems whose failure to perform be reasonably expected to result in significant injury or loss of life or catastrophic property damage. Accordingly, Supermicro disclaims any and all liability, and should buyer use or sell such products for use in such ultra-hazardous applications, it does so entirely at its own risk. Furthermore, buyer agrees to fully indemnify, defend and hold Supermicro harmless for and against any and all claims, demands, actions, litigation, and proceedings of any kind arising out of or related to such ultra-hazardous use or sale.

Manual Revision 1.1a

Release Date: May 22, 2025

Unless you request and receive written permission from Super Micro Computer, Inc., you may not copy any part of this document. Information in this document is subject to change without notice. Other products and companies referred to herein are trademarks or registered trademarks of their respective companies or mark holders.

Copyright © 2025 by Super Micro Computer, Inc.
All rights reserved.
Printed in the United States of America

Preface

About this Manual

This manual is written for professional system integrators and PC technicians. It provides information for the installation and use of the server. Installation and maintenance should be performed by experienced technicians only.

Please refer to the AS -2115HS-TNR server specifications page on our website for updates on supported memory, processors, and operating systems (http://www.supermicro.com).

Notes

For your system to work properly, please follow the links below to download all necessary drivers/utilities and the user's manual for your server.

- Supermicro product manuals: http://www.supermicro.com/support/manuals/
- Product drivers and utilities: https://www.supermicro.com/wdl
- Product safety info: http://www.supermicro.com/about/policies/safety_information.cfm

If you have any questions, please contact our support team at:
support@supermicro.com

This manual may be periodically updated without notice. Please check the Supermicro website for possible updates to the manual revision level.

Secure Data Deletion

A secure data deletion tool designed to fully erase all data from storage devices can be found on our website: https://www.supermicro.com/about/policies/disclaimer.cfm?url=/wdl/utility/Log9_Secure_Data_Deletion_Utility/

Warnings

Special attention should be given to the following symbols used in this manual.

Warning! Indicates important information given to prevent equipment/property damage or personal injury.

Warning! Indicates high voltage may be encountered when performing a procedure.

Contents

Chapter 1 Introduction

1.1 Overview....9

1.2 System Features....11

Front View....11

Drive Carrier Indicators....12

Rear View....14

1.3 System Architecture....16

Main Components....16

System Block Diagram....17

1.4 Motherboard Layout....18

Quick Reference Table....19

Chapter 2 Server Installation

2.1 Overview....20

2.2 Unpacking the System....20

2.3 Preparing for Setup....20

Choosing a Setup Location....20

Rack Precautions....21

Server Precautions....21

Rack Mounting Considerations....21

Ambient Operating Temperature....21

Airflow....22

Mechanical Loading....22

Circuit Overloading....22

Reliable Ground....22

2.4 Installing the Rails....23

Identifying the Rails....23

Releasing the Inner Rail....24

Installing the Inner Rails....25

Installing the Outer Rails onto the Rack....26

2.5 Installing the Chassis into a Rack....27

Removing the Chassis from the Rack....28

Chapter 3 Maintenance and Component Installation

3.1 Removing Power 29
3.2 Accessing the System 30
Removing the Top Cover 30
3.3 Processor and Heatsink Installation 31
3.4 Memory Support and Installation 39
DIMM Module Population Sequence 41
DIMM Installation 42
DIMM Removal 42
3.5 Motherboard Battery 43
3.6 Storage Drives 44
M.2 Solid State Drives 46
Hot-Swap for NVMe Drives 48
3.7 System Cooling 49
Fans 49
Air Shrouds 50
3.8 Expansion Cards 51
Expansion Card Slot Configurations 51
Installing a Riser Card 52
Installing Expansion Cards 52
3.9 AIOM Network Cards 53
3.10 Power Supply 54
3.11 Cable Routing Diagrams 55
AS -2115HS-TNR Configurations 55
24 NVME + 1 PCIe x16 or 2 PCIe x8 57
24 SATA + 4 PCIe x16 or 8 PCIe x8 58
20 NVMe + 4 SAS + 2 PCIe x16 or 4 PCIe x8 59
24 SAS + 4 PCIe x16 or 8 PCIe x8 60
4 PCIe x16 or 8 PCIe x8 61
16 SAS + 4 PCIe x16 or 8 PCIe x8 62
20 NVMe + 2PCIe x16 or 4 PCIe x8 63
16 SATA + 4 PCIe x16 or 8 PCIe x8 64

Chapter 4 Motherboard Connections

4.1 Power Connections 65

4.3 Input/Output Ports 67

4.4 LED Indicators 68

Chapter 5 Software

5.1 Microsoft Windows OS Installation 69

5.2 Driver Installation 71

5.3 SuperDoctor® 5 72

5.4 IPMI 73

Chapter 6 Optional Components

6.1 Storage Protocols Supported 74

6.2 Storage Control Cards 75

6.3 PCIe Options 76

AS -2115HS-TNR Drive Bay Configuration Options 76

AS -2115HS-TNR PCIe Slot Configuration Options 78

6.4 Power Supply Configurations 81

6.5 Cable Management Arm 81

6.6 TPM Security Module 83

Chapter 7 Troubleshooting and Support

7.1 Information Resources 84

Website 84

Direct Links for the AS -2115HS-TNR System 84

Direct Links for General Support and Information 84

7.2 Baseboard Management Controller (BMC) 85

7.3 Troubleshooting Procedures 86

Before Power On 86

No Power 86

No Video 86

System Boot Failure 87

Memory Errors 87

The System Cannot Retain the Setup Configuration 87

When the System Becomes Unstable 87

7.4 CMOS Clear .....

7.5 Where to Get Replacement Components .....

7.6 Technical Support Procedures .....

Returning Merchandise for Service.....
7.4 Crash Dump Using BMC.....89
7.5 UEFI BIOS Recovery.....90
Overview.....90
Recovering the UEFI BIOS Image.....90
Recovering the Main BIOS Block with a USB Device.....90
7.6 CMOS Clear.....95
7.7 Where to Get Replacement Components.....96
7.8 BMC.....96
7.9 Reporting an Issue.....97
Technical Support Procedures.....97
Returning Merchandise for Service.....97
Vendor Support Filing System.....98
7.10 Feedback.....98
Appendix A Standardized Warning Statements for AC Systems
Appendix B System Specifications

Contacting Supermicro

Headquarters

Address:	Super Micro Computer, Inc.
	980 Rock Ave.
	San Jose, CA 95131 U.S.A.
Tel:	+1 (408) 503-8000
Fax:	+1 (408) 503-8008
Email:	marketing@supermicro.com (General Information)
	Sales-USA@supermicro.com (Sales Inquiries)
	Government_Sales-USA@supermicro.com (Gov. Sales Inquiries)
	support@supermicro.com (Technical Support)
	RMA@supermicro.com (RMA Support)
	Webmaster@supermicro.com (Webmaster)
Website:	www.supermicro.com

Europe

Address:	Super Micro Computer B.V.
	Het Sterrenbeeld 28, 5215 ML
	's-Hertogenbosch, The Netherlands
Tel:	+31 (0) 73-6400390
Fax:	+31 (0) 73-6416525
Email:	Sales_Europe@supermicro.com (Sales Inquiries)
	Support_Europe@supermicro.com (Technical Support)
	RMA_Europe@supermicro.com (RMA Support)
Website:	www.supermicro.nl

Asia-Pacific

Address:	Super Micro Computer, Inc.
	3F, No. 150, Jian 1st Rd.
	Zhonghe Dist., New Taipei City 235
	Taiwan (R.O.C)
Tel:	+886-(2) 8226-3990
Fax:	+886-(2) 8226-3992
Email:	Sales-Asia@supermicro.com.tw (Sales Inquiries)
	Support@supermicro.com.tw (Technical Support)
	RMA@supermicro.com.tw (RMA Support)
Website:	www.supermicro.com.tw

Chapter 1

Introduction

1.1 Overview

This chapter provides a brief outline of the functions and features of the A+ Server AS -2115HS-TNR. The following provides an overview of the specifications and capabilities.

System Overview	
Motherboard	H13SSH
Chassis	CSE-HS219-R1K63P-A
Processor Support	Single AMD EPYC™ 9004/9005 (motherboard revision 2.0 or later is required) Series processor in SP5 socket and a Thermal Design Power (TDP) unit up to 500 W* (BIOS v3.4 or later is required) (*Depending on thermal validation and system configuration. Contact a Supermicro representative for details.)
Memory	24 DIMM slots with 2DPC that support up to 6 TB of ECC DDR5 RDIMM at 4000 MT/s(1R)/3600MT/s(2R/3DS) (9004 Series CPU) 6 TB of ECC DDR5 RDIMM at 4400 MT/s(1R)/4000MT/s(2R/3DS) (MB Rev. 2.00 or later is required and 9005 Series CPU only) -or- 12 DIMM slots with 1DPC that support up to 3 TB of ECC DDR5 RDIMM at 4800 MT/s (9004 Series CPU) 3 TB of ECC DDR5 RDIMM at 5200 MT/s (MB Rev. 2.00 or later is required and 9005 Series CPU only) For details, please refer to Section 3.4.
Drive Support	24 hot-swap 2.5" NVMe/SAS/SATA drives (additional components are needed to enable the drive options) Two M.2 slots for boot drives, M.2-C1 supports PCIe Gen 3 x4 and M.2-C2 supports PCIe Gen 3 x2 (a blue latch helps to hold the M.2 SSDs in place, see Chapter 3 for more details)
Expansion Slots	Slot configuration options for 24 SATA/SAS and 16 SATA/SAS setup: Four PCIe 5.0 x16 slots or Eight PCIe 5.0 x8 slots or Three PCIe 5.0 x16 slots + two PCIe 5.0 x8 slots or Two PCIe 5.0 x16 slots + four PCIe 5.0 x8 slots or One PCIe 5.0 x16 slot + six PCIe 5.0 x8 slots Slot configuration options for 24 NVMe setup: One PCIe 5.0 x16 slot or two PCIe 5.0 x8 slots Slot configuration options for 20 NVMe setup: Two PCIe 5.0 x16 slot or four PCIe 5.0 x8 slots
I/O Ports	One AIOM slot for flexible networking (OCP 3.0 compatible) One RJ45 dedicated BMC LAN port Two USB 3.2 Gen1 ports (rear) One VGA port
System Cooling	Four 8-cm heavy duty fans with optimal fan speed control One air shroud
Power	Two 1600 W redundant power supplies Optional 1300 W redundant DC power supplies (Full redundancy based on configuration and application load)

Form Factor	2U: 3.5 x 17.2 x 29.9 in. / 88.9 x 437 x 760 mm (HxWxD)

Note: A Quick Reference Guide can be found on the product page of the Supermicro website.

The following safety models associated with the AS -2115HS-TNR have been certified as compliant with UL or CSA: HS219-R12H13, HS219-R9H13, HS219-R16H13, HS219-R20H13, HS219-R26H13, HS219-R13DH13, HS219-R16DH13, and H219-R20DH13.

1.2 System Features

The following views of the system display the main features. Refer to Appendix B for additional specifications.

Front View

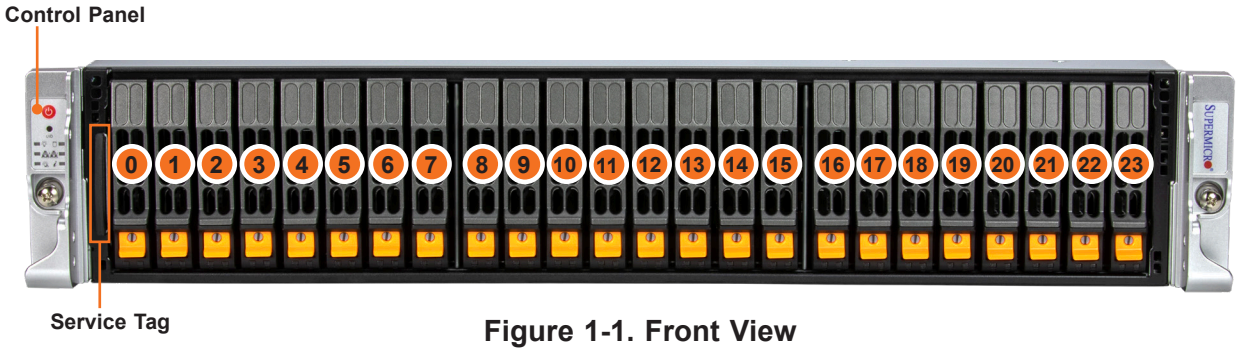

Figure 1-1. Front View

System Features: Front	
Feature	**Description**
Control Panel	Front control panel with LEDs and buttons (see Control Panel for details)
Service Tag	Service Tag with BMC password reset

Logical Storage Drive Numbers	
Item	**Description**
0-23	24 hot-swap 2.5" NVMe/SAS/SATA drive bays*

*Additional components are needed to enable the drive options.

Drive Carrier Indicators

Each drive carrier has two LED indicators: an activity indicator and a status indicator. For RAID configurations using a controller, the meaning of the status indicator is described in the table below. For OS RAID or non-RAID configurations, some LED indications are not supported, such as hot spare.

Drive Carrier LED Indicators			
	Color	**Blinking Pattern**	**Behavior for Device**
Activity LED	Blue	Solid On	Idle SAS/NVMe drive installed
	Blue	Blinking	I/O activity
	Off		Idle SATA drive installed
Status LED	Red	Solid On	Drive failure
	Red	Blinking at 1 Hz	Rebuilding drive
	Red	Blinking with two blinks and one stop at 1 Hz	Hot spare for drive
	Red	On for five seconds, then off	Power on for drive
	Red	Blinking at 4 Hz	Identifying drive
	Green	Solid on	Safe to remove NVMe drive
	Amber	Blinking at 1 Hz	Do not remove NVMe drive

Control Panel

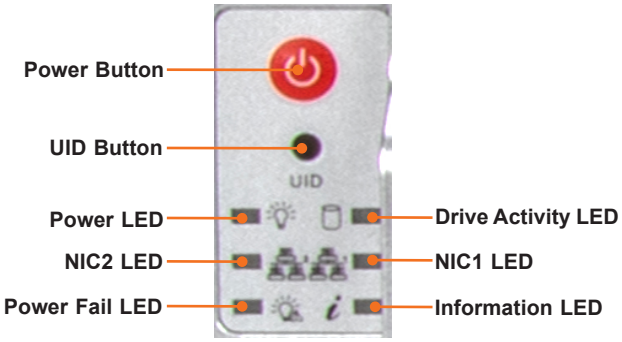

Figure 1-2. Control Panel

Control Panel Features	
Feature	**Description**
Power Button	The main power button is used to apply or remove power from the power supply to the server. Turning off system power with this button removes the main power but maintains standby power. To perform many maintenance tasks, you must also unplug the system before servicing.
UID Button	Press and hold the button to toggle the UID function in the information LED. Reset— Press and hold the button. After 6 seconds, the BMC resets. Restore factory default configuration— Hold the button for 12 seconds.
Power LED	Steady on: DC power (Main Power) on Blinking at 4 Hz – Checking BIOS/BMC integrity Blinking at 4 Hz and "i" LED is blue – BIOS firmware updating Two blinks at 4 Hz, one 2 Hz pause and "i" LED blue – BMC firmware updating
Drive Activity LED	Indicates activity on the drive when flashing.
NIC2 LED	Indicates network activity on even numbered LAN ports. (A1, ports 2 & 4).
NIC1 LED	Indicates network activity on odd numbered LAN ports. (A1, ports 1 & 3).
Power Fail LED	Indicates a power supply module has failed.
Information LED	See table below for details.

Information LED	
Color, Status	**Description**
Red, solid	An overheat condition has occurred.
Red, blinking at 1 Hz	Fan failure, check for an inoperative fan.
Red, blinking at 0.25 Hz	Power failure, check for a non-operational power supply.
Red, solid, with power LED blinking green	Fault detected
Blue and red, blinking at 10 Hz	Recovery mode
Blue, solid	UID has been activated locally to locate the server in a rack environment.
Blue, blinking at 1 Hz	UID has been activated using the BMC to locate the server in a rack environment.
Blue, blinking at 2 Hz	BMC is resetting
Blue, blinking at 4 Hz	BMC is setting factory defaults
Blue, blinking at 10 Hz with power LED blinking green	BMC/BIOS firmware is updating

Rear View

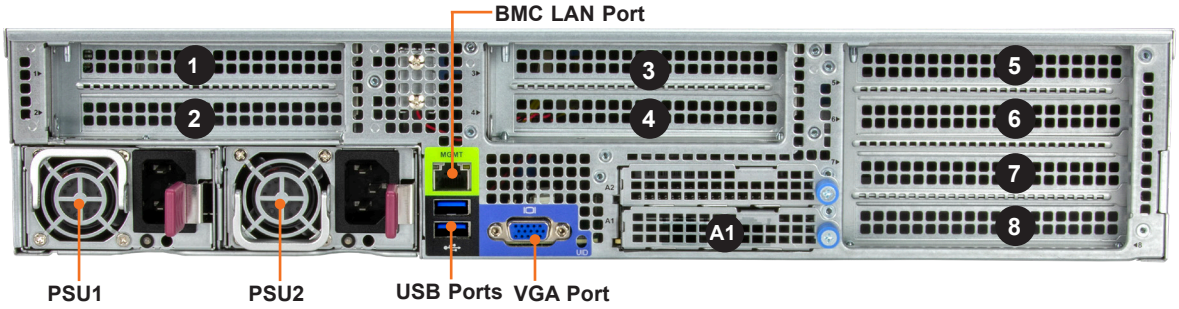

Figure 1-3. Rear View

System Features: Rear	
Feature	**Description**
Power Supplies (PSU1 and PSU2)	Two 1600 W Titanium Level redundant power supply modules
BMC LAN	One RJ45 dedicated BMC LAN port
USB	Two USB 3.2 Gen1 ports
VGA	One video port

Expansion Slot Locations	
Slot	**Description**
A1	PCIe 5.0 x16 AIOM slot (OCP 3.0 Compatible)

Expansion Slot Locations		
Slot	**Option 1***	**Option 2***
*1	PCIe 5.0 x16 (FH, 10.5"L)	PCIe 5.0 x8 (FH, 10.5"L)
*2	Not available	PCIe 5.0 x8 (FH, 10.5"L)
*3	PCIe 5.0 x16 (FH, 10.5"L)	PCIe 5.0 x8 (FH, 10.5"L)
*4	Not available	PCIe 5.0 x8 (FH, 10.5"L)

Expansion Slot Locations			
Slot	**Option 1***	**Option 2***	**Option 3***
*5	PCIe 5.0 x16 (FH, 10.5"L)	PCIe 5.0 x16 (FH, 10.5"L)	PCIe 5.0 x8 (FH, 10.5"L)
*6	Not available	Not available	PCIe 5.0 x8 (FH, 10.5"L)
7	PCIe 5.0 x8 (FH, 10.5"L)	PCIe 5.0 x16 (FH, 10.5"L)	PCIe 5.0 x8 (FH, 10.5"L)
8	PCIe 5.0 x8 (FH, 10.5"L)	Not available	PCIe 5.0 x8 (FH, 10.5"L)

*Slots 1, 2, 3, 4, 5, 6 are not available with 24 NVMe configuration.

Power Supply Indicators		
Power Supply Condition	**Green LED**	**Amber LED**
No AC Power to Power Supply	OFF	OFF
Power Supply critical events causing a shutdown/ failure/ OCP/ OVP/ Fan Fail/ OTP/ UVP	OFF	Amber LED
Power Supply Warning Events Where the power supply continues to operate; High temperature; Over voltage; under voltage, etc.	OFF	1 Hz blinking Amber
AC present only 12 VSB ON (PS OFF)	1 Hz blinking Green	OFF
Output ON and OK	Green	OFF
AC cord unplugged and in redundant mode	OFF	Amber

1.3 System Architecture

This section shows the locations of the system's main components and a system block diagram.

Main Components

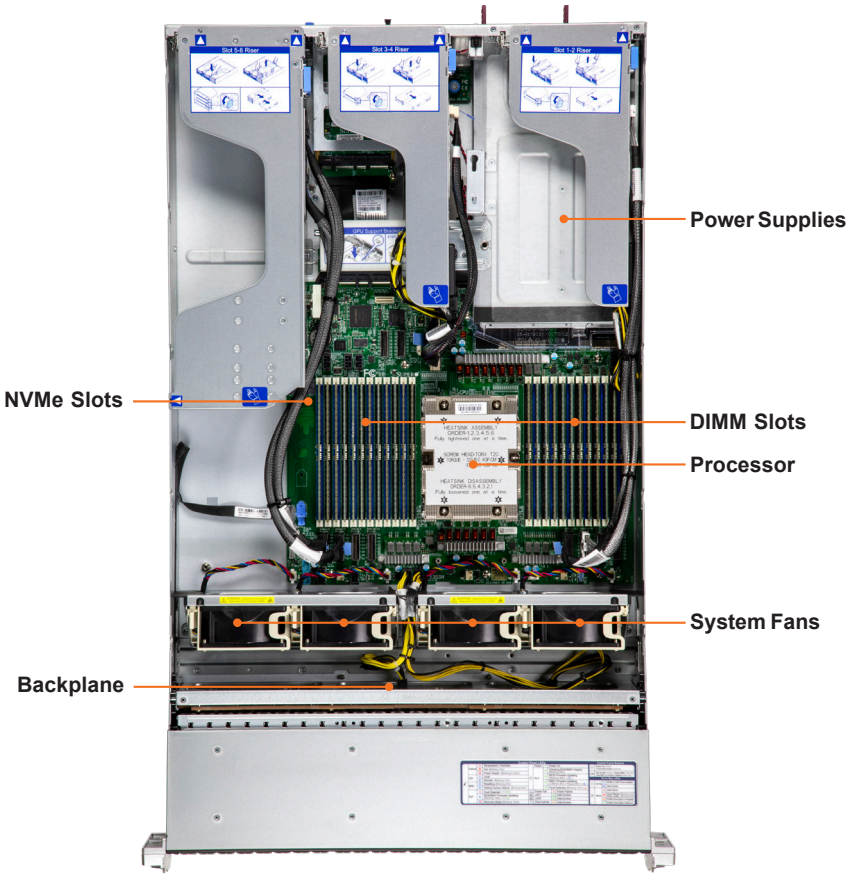

Figure 1-4. Main Component Locations

System Features: Top	
Feature	**Description**
Power Supplies	Two redundant power supplies, PWS-1K63A-1R, 1600 W (Titanium Level)
NVMe slots	Two M.2 NVMe Gen4 slots
DIMM slots	24 DDR5 DIMM slots
Processor	Single AMD EPYC™ 9004/9005 (motherboard revision 2.0 or later is required) Series processor in SP5 socket
System Fans	Four 8-cm dual counter-rotating PWM fans, FAN-0223L4 or FAN-0209L4-1
Backplane	Storage device backplane for 24 SAS/SATA/NVMe drives, BPN-NVME5-HS219N-S24

System Block Diagram

The block diagram below shows the connections and relationships between the subsystems and major components of the overall system.

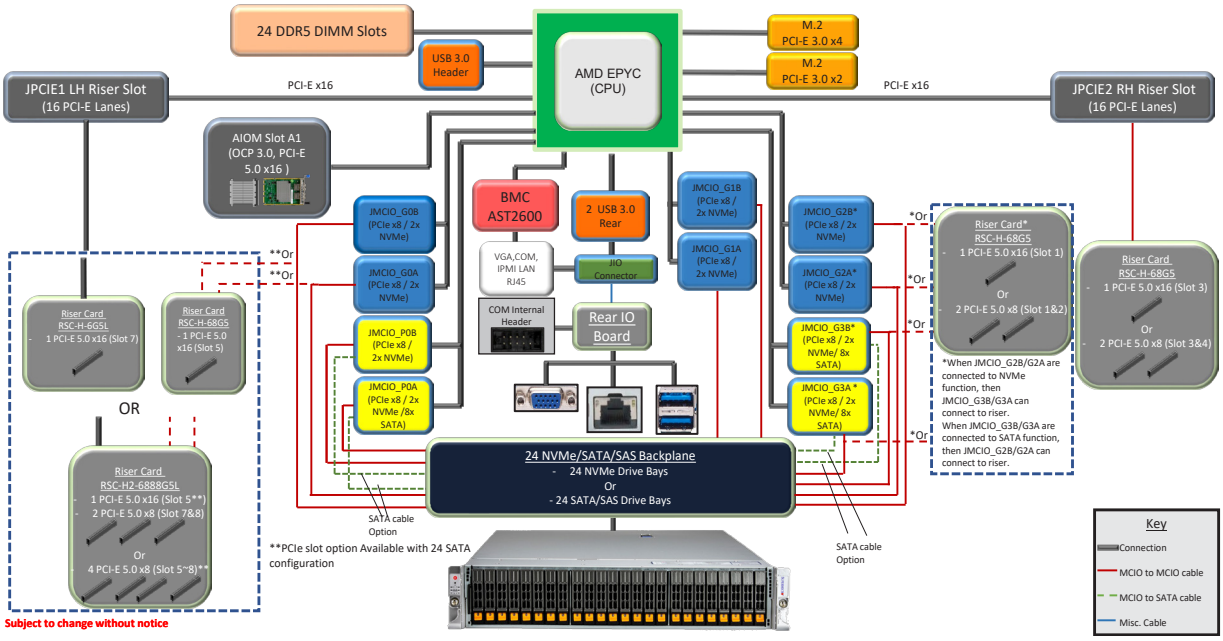

Figure 1-5. System Block Diagram

1.4 Motherboard Layout

Below is a layout of the H13SSH motherboard with the jumper, connector and LED locations shown. See the table on the following page for descriptions. For detailed descriptions, pinout information and jumper settings, refer to Chapter 4 or the Motherboard Manual.

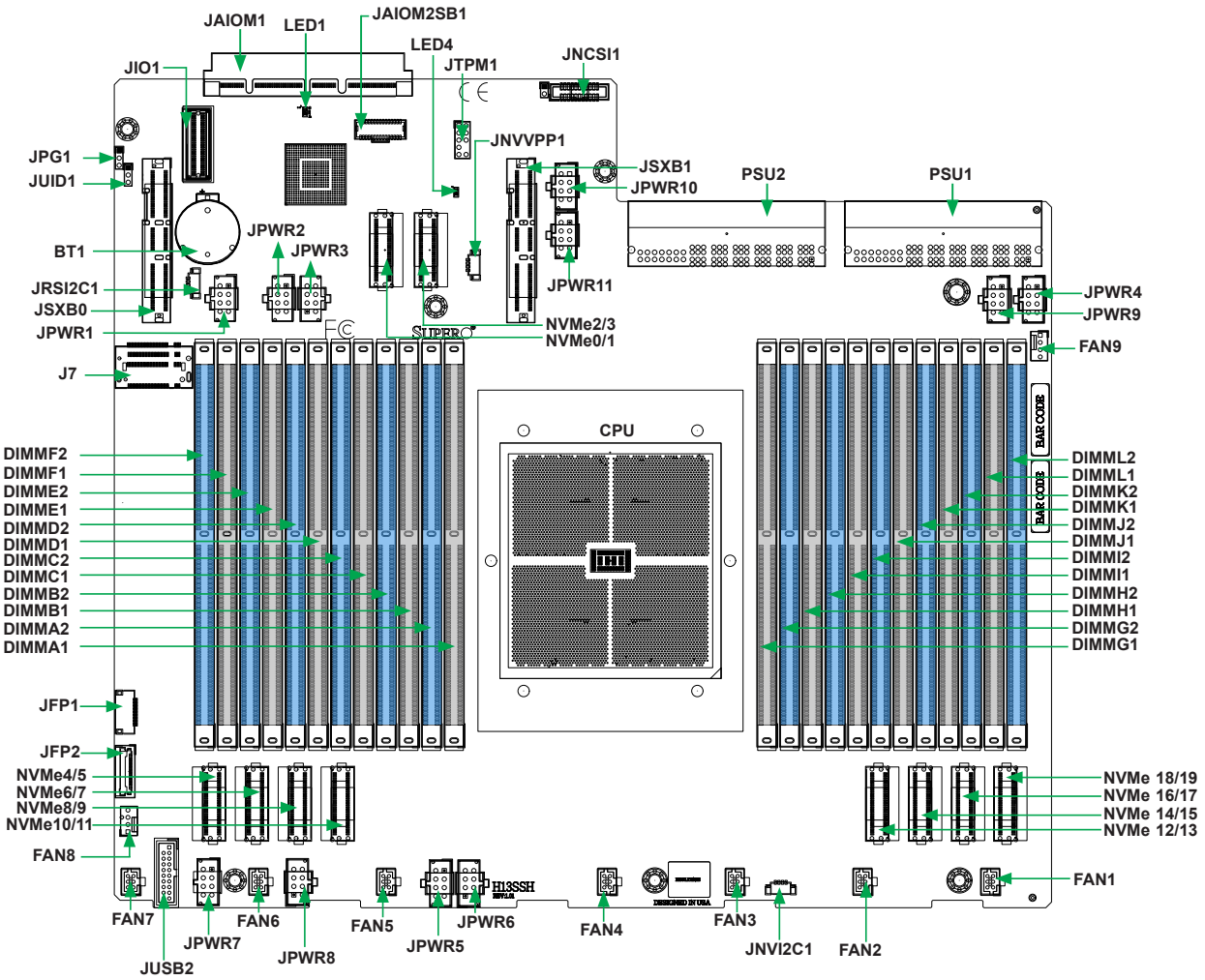

Figure 1-6. Motherboard Layout

Quick Reference Table

Jumper	Description	Default Setting
JUID1	Switch function UID / Reset	Pins 1-2 (UID)
JPG1	VGA Enable / Disable	Pins 1-2 (Enable)

LED	Description	Status
LED4	Power LED	Solid Green: Power on
LED1	BMC heartbeat LED	Green: Blinking (BMC normal) Green: Fast blinking (BMC initializing)

Connector	Description
JNCSI1	NCSI connector
JPWR1-11	12V 8-Pin GPU / BPN / AOC power connector
BT1	Onboard battery
JTPM1	TPM (Trusted Platform Module) / Port 80
FAN1-FAN7	Hot-swappable system fan
FAN8	4-pin system fan header
FAN9	Active CPU heatsink fan header
JAIOM1	Supermicro® Advanced I/O Module (AIOM PCIe 5.0x16) slot
JFP1, JFP2	Front control panel headers 1 and 2
JUSB2	USB 3.0 header
NVMe 0/1	PCIe1A / SATA0-7
NVMe 2/3	PCIe1B / SATA8-15
NVMe 16/17	PCIe5B / SATA24-31
NVMe 18/19	PCIe5A / SATA16-23
NVMe 4/5-14/15	PCIe2B / PCIe2A / PCIe3B / PCIe3A / PCIe4B / PCIe4A
PSU1/PSU2	Motherboard main power supply connector
JIO1	Front BMC and onboard VGA / USB / LAN module connector
JSXB0-1	Slot 1-2 PCIe 5.0 x16
J7	M.2-C1 PCIe 3.0 x4 / M.2-C2 PCIe 3.0 x2

Note: Jumpers, connectors, switches, and LED indicators that are not described in the preceding tables are for manufacturing testing purposes only, and are not covered in this manual.

Chapter 2

Server Installation

2.1 Overview

This chapter provides advice and instructions for mounting your system in a server rack. If your system is not already fully integrated with processors, system memory, etc., refer to Chapter 3 for details on installing those specific components.

Caution: Electrostatic Discharge (ESD) can damage electronic components. To prevent such damage to PCBs (printed circuit boards), it is important to use a grounded wrist strap, handle all PCBs by their edges and keep them in anti-static bags when not in use.

2.2 Unpacking the System

Inspect the box in which the system was shipped, and note if it was damaged in any way. If any equipment appears damaged, file a damage claim with the carrier who delivered it.

Decide on a suitable location for the rack unit that will hold the server. It should be situated in a clean, dust-free area that is well ventilated. Avoid areas where heat, electrical noise, and electromagnetic fields are generated. It will also require a grounded AC power outlet nearby. Be sure to read the precautions and considerations noted or in Appendix A.

2.3 Preparing for Setup

The box in which the system was shipped should include the rackmount hardware needed to install it into the rack. Please read this section in its entirety before you begin the installation.

Choosing a Setup Location

- The system should be situated in a clean, dust-free area that is well ventilated. Avoid areas where heat, electrical noise, and electromagnetic fields are generated.
- Leave enough clearance in front of the rack so that you can open the front door completely (approximately 25 inches) and approximately 30 inches of clearance in the back of the rack to allow sufficient space for airflow and access when servicing.
- This product should be installed only in a Restricted Access Location (dedicated equipment rooms, service closets, etc.).

- This product is not suitable for use with visual display workplace devices according to §2 of the German Ordinance for Work with Visual Display Units.

Rack Precautions

- Ensure that the leveling jacks on the bottom of the rack are extended to the floor so that the full weight of the rack rests on them.
- In single rack installations, stabilizers should be attached to the rack. In multiple rack installations, the racks should be coupled together.
- Always make sure the rack is stable before extending a server or other component from the rack.
- You should extend only one server or component at a time - extending two or more simultaneously may cause the rack to become unstable.

Server Precautions

- Review the electrical and general safety precautions in Appendix A.
- Determine the placement of each component in the rack before you install the rails.
- Install the heaviest server components at the bottom of the rack first and then work your way up.
- Use a regulating uninterruptible power supply (UPS) to protect the server from power surges and voltage spikes and to keep your system operating in case of a power failure.
- Allow any drives and power supply modules to cool before touching them.
- When not servicing, always keep the front door of the rack and all covers/panels on the servers closed to maintain proper cooling.

Rack Mounting Considerations

Ambient Operating Temperature

If installed in a closed or multi-unit rack assembly, the ambient operating temperature of the rack environment may be greater than the room's ambient temperature. Therefore, consideration should be given to installing the equipment in an environment compatible with the manufacturer’s maximum rated ambient temperature (TMRA).

Airflow

Equipment should be mounted into a rack so that the amount of airflow required for safe operation is not compromised.

Mechanical Loading

Equipment should be mounted into a rack so that a hazardous condition does not arise due to uneven mechanical loading.

Circuit Overloading

Consideration should be given to the connection of the equipment to the power supply circuitry and the effect that any possible overloading of circuits might have on overcurrent protection and power supply wiring. Appropriate consideration of equipment nameplate ratings should be used when addressing this concern.

Reliable Ground

A reliable ground must be maintained at all times. To ensure this, the rack itself should be grounded. Particular attention should be given to power supply connections other than the direct connections to the branch circuit (i.e. the use of power strips, etc.).

To prevent bodily injury when mounting or servicing this unit in a rack, you must take special precautions to ensure that the system remains stable. The following guidelines are provided to ensure your safety:

- This unit should be mounted at the bottom of the rack if it is the only unit in the rack.
- When mounting this unit in a partially filled rack, load the rack from the bottom to the top with the heaviest component at the bottom of the rack.
- If the rack is provided with stabilizing devices, install the stabilizers before mounting or servicing the unit in the rack.
- Slide rail mounted equipment is not to be used as a shelf or a workspace.

Slide rail mounted equipment is not to be used as a shelf or a workspace.

Warning: Do not pick up the server with the front handles. They are designed to pull the system from a rack only.

2.4 Installing the Rails

This section provides information on installing the chassis into a rack unit with the rails provided. There are a variety of rack units on the market, which may mean that the assembly procedure will differ slightly from the instructions provided. You should also refer to the installation instructions that came with the rack unit you are using.

Note: This rail will fit a rack between 26.8" and 36.4" deep.

Identifying the Rails

The chassis package includes two rails assemblies, (MCP-290-11903-0N). Each assembly consists of three sections: An inner rail that secures directly to the chassis, an outer rail that secures to the rack, and a middle rail which extends from the outer rail. These assemblies are specifically designed for the left and right side of the chassis and labeled.

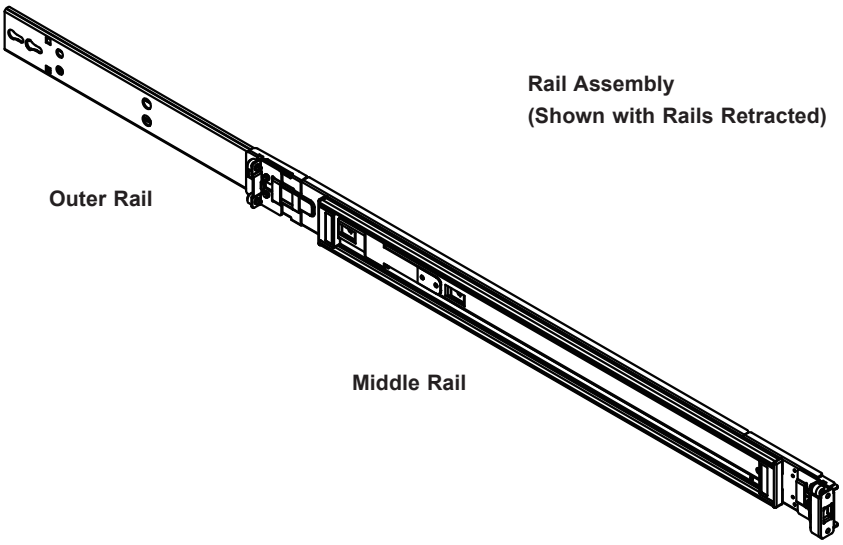

Figure 2-1. Identifying the Outer Rail, Middle Rail, and Inner Rail (Left Rail Assembly Shown)

Note: Both front chassis rails and the rack rails have a locking tab, which serves two functions. First, it locks the chassis into place when installed and pushed fully into the rack (its normal operating position. In addition, these tabs lock the chassis in place when fully extended from the rack. This prevents the chassis from coming completely out of the rack when pulled out for servicing.

Releasing the Inner Rail

Each inner rail has a locking latch. This latch prevents the chassis from coming completely out of the rack when the chassis is pulled out for servicing.

To mount the rail onto the chassis, first release the inner rail from the outer rails.

1. Pull the inner rail out of the outer rail until it is fully extended as illustrated below.
2. Press the locking tab down to release the inner rail.
3. Pull the inner rail all the way out.

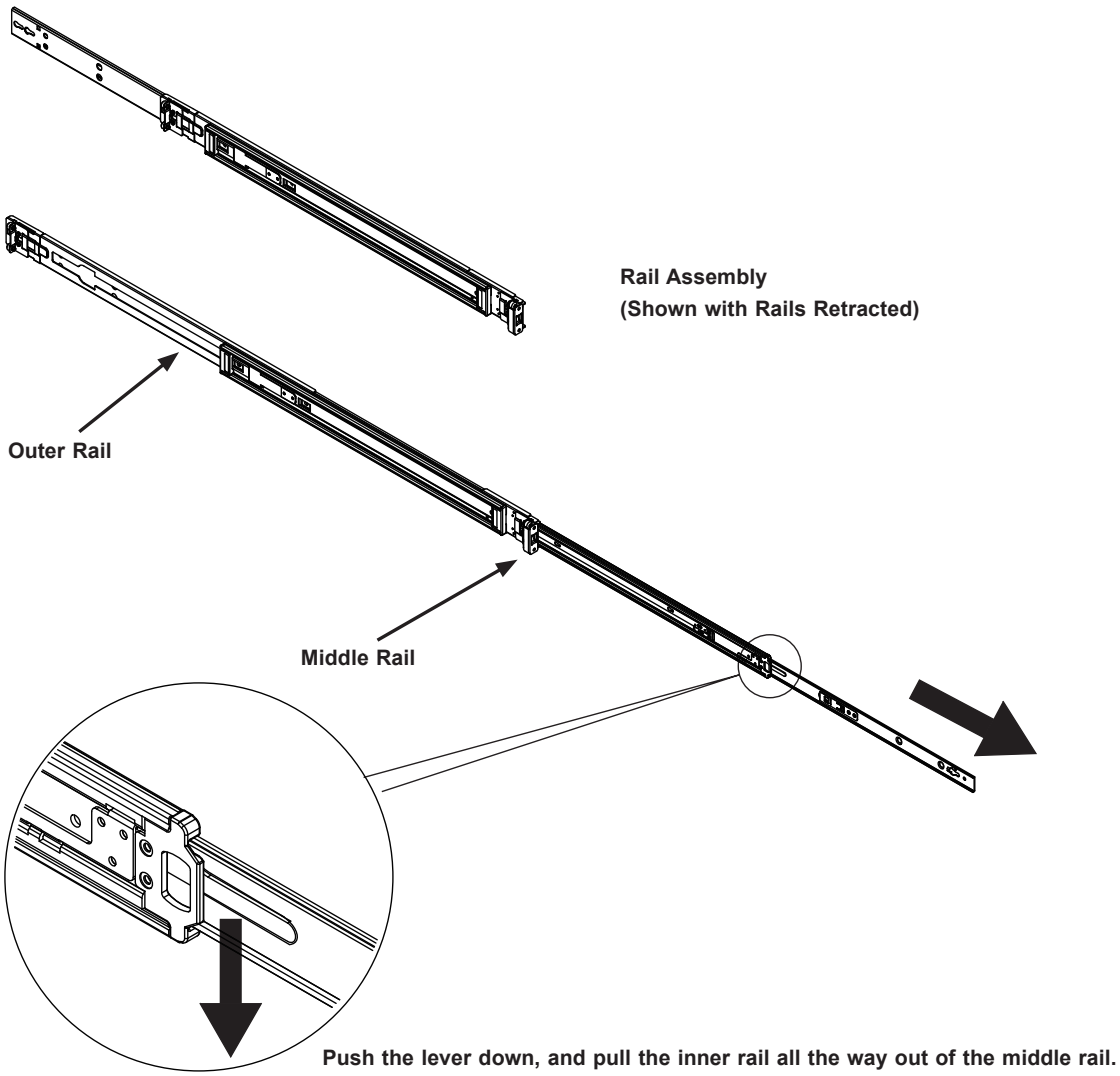

Figure 2-2. Extending and Releasing the Inner Rail

Installing the Inner Rails

Begin the rack mounting procedure by installing the inner rails to the chassis.

1. Identify the left and right inner rails. They are labeled.
2. Place the inner rail firmly against the side of the chassis, aligning the hooks on the side of the chassis with the holes in the inner rail.
3. Slide the inner rail forward toward the front of the chassis and under the hooks until the quick release bracket snaps into place, securing the rail to the chassis.
4. Optionally, you can further secure the inner rail to the chassis with a screw.

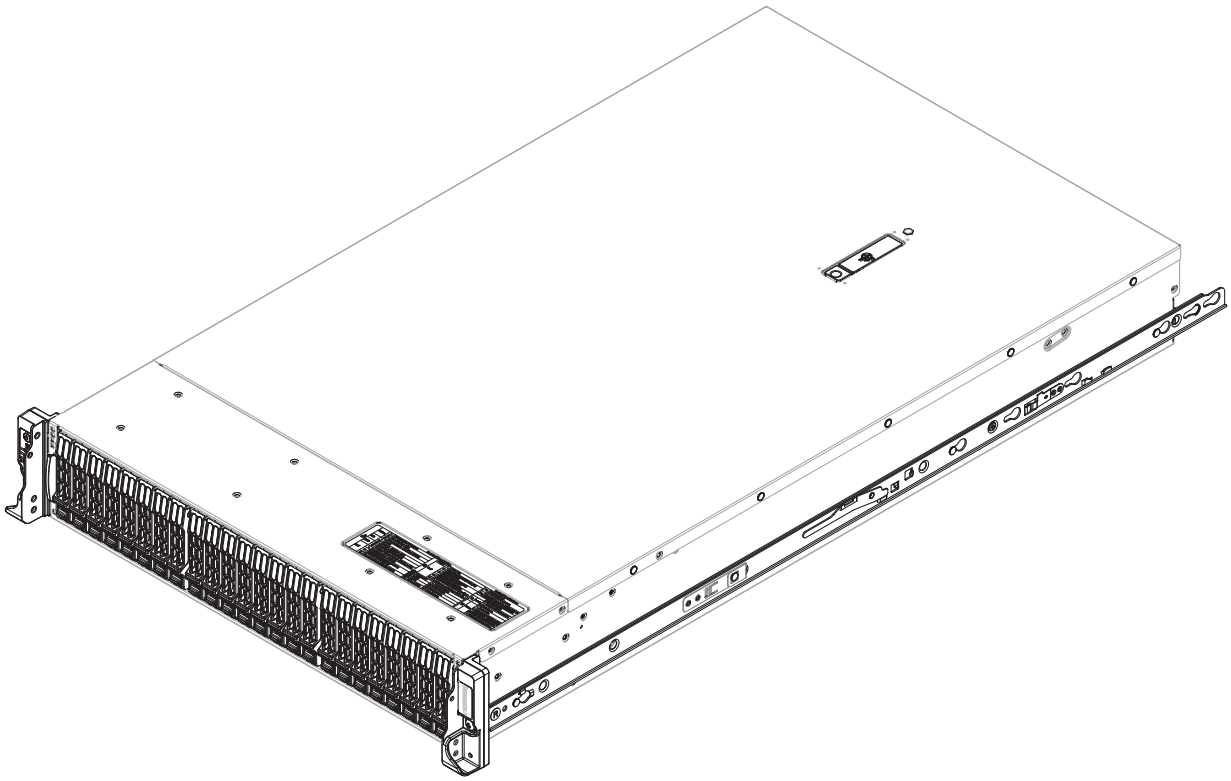

Figure 2-3. Installing the Rails

Warning: Do not pick up the chassis with the front handles. They are designed to pull the system from a rack only.

Installing the Outer Rails onto the Rack

Installing the Outer Rails

1. Press upward on the locking tab at the rear end of the middle rail.
2. Push the middle rail back into the outer rail.
3. Hang the hooks on the front of the outer rail onto the square holes on the front of the rack. If desired, use screws to secure the outer rails to the rack.
4. Pull out the rear of the outer rail, adjusting the length until it just fits within the posts of the rack.
5. Hang the hooks of the rear section of the outer rail onto the square holes on the rear of the rack. Take care that the proper holes are used so the rails are level. If desired, use screws to secure the rear of the outer rail to the rear of the rack.
6. Repeat for the other outer rail.

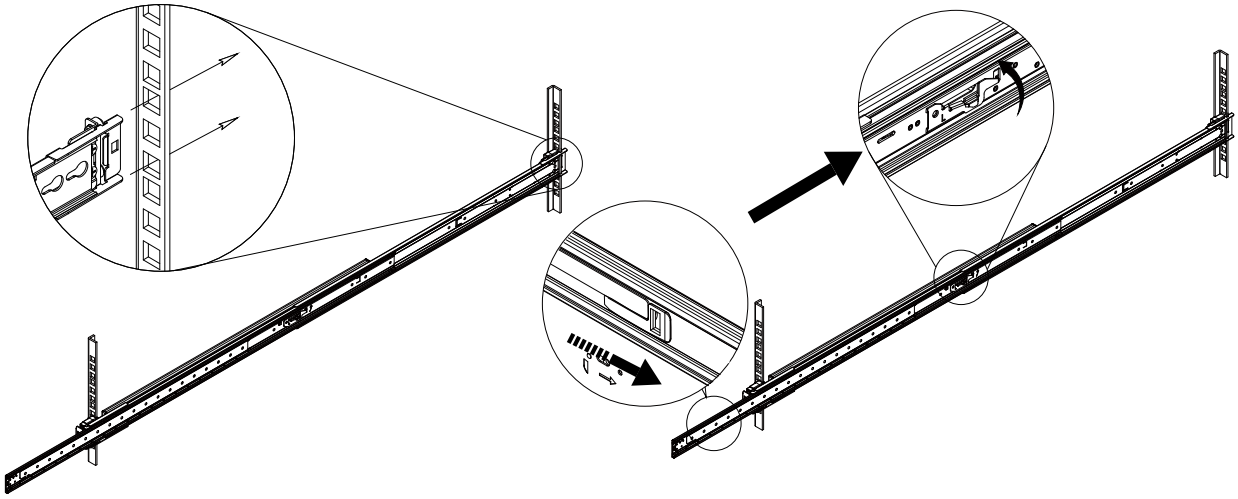

Figure 2-4. Extending and Mounting the Outer Rails

2.5 Installing the Chassis into a Rack

Once rails are attached to the chassis and the rack, you can install the server.

Warning: Mounting the system into the rack requires at least two people to support the chassis during installation. Please follow safety recommendations printed on the rails.

Installing the Chassis into a Rack

1. Extend the outer rails as illustrated.
2. Align the inner rails of the chassis with the outer rails on the rack.
3. Slide the inner rails into the outer rails, keeping the pressure even on both sides. When the chassis has been pushed completely into the rack, it should click into the locked position.
4. Optional screws may be used to hold the front of the chassis to the rack.

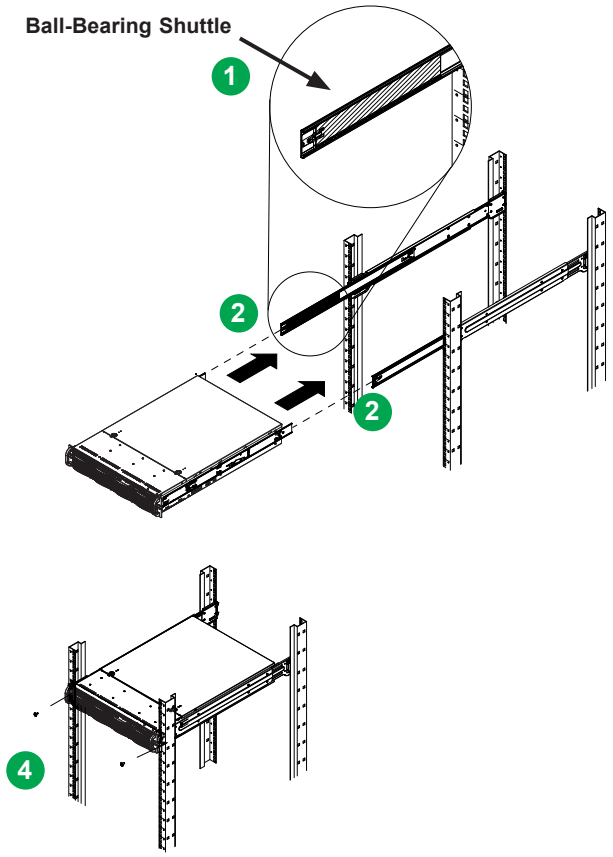

Figure 2-5. Installing the Server into the Rack

Note: Keep the ball bearing shuttle locked at the front of the middle rail during installation.

Note: Figure is for illustrative purposes only. Always install servers to the bottom of a rack first.

Removing the Chassis from the Rack

Caution! It is dangerous for a single person to off-load the heavy chassis from the rack without assistance. Be sure to have sufficient assistance supporting the chassis when removing it from the rack. Use a lift.

1. Pull the chassis forward out the front of the rack until it stops.
2. Press the release latches on each of the inner rails downward simultaneously and continue to pull the chassis forward and out of the rack.

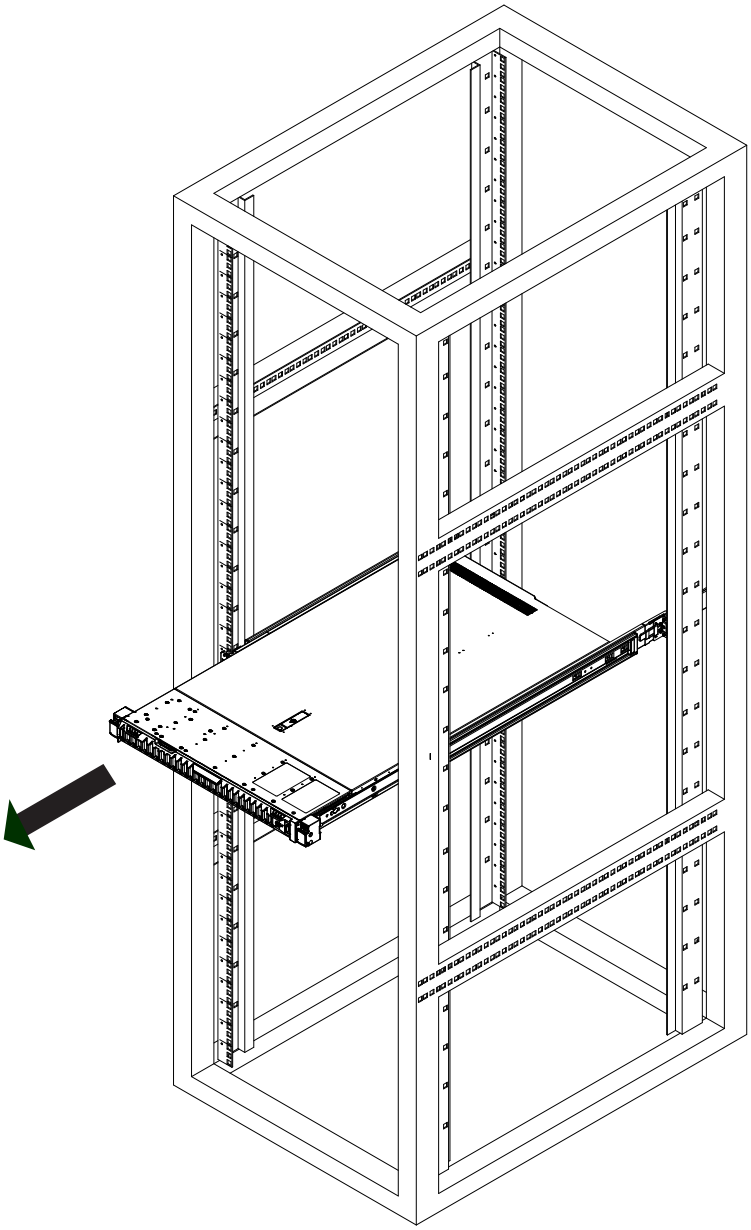

Figure 2-6. Removing the Chassis From the Rack

Chapter 3

Maintenance and Component Installation

This chapter provides instructions on installing and replacing main system components. To prevent compatibility issues, only use components that match the specifications and/or part numbers given.

Installation or replacement of most components requires that power first be removed from the system. Please follow the procedures given in each section.

3.1 Removing Power

Use the following procedure to ensure that power has been removed from the system. This step is necessary when removing or installing non-hot-swap components or when replacing a non-redundant power supply.

1. Use the operating system to power down the system.
2. After the system has completely shut-down, disconnect the AC power cord(s) from the power strip or outlet. (If your system has more than one power supply, remove the AC power cords from all power supply modules.)
3. Disconnect the power cord(s) from the power supply module(s).

3.2 Accessing the System

The AS -2115HS-TNR server features a removable top cover, which allows easy access to the inside of the chassis.

Removing the Top Cover

1. Press the release button and slide the cover toward the rear.
2. Lift the top cover-up.

Check that all ventilation openings on the top cover and the top of the chassis are clear and unobstructed.

Caution: Except for short periods of time, do not operate the server without the cover in place. The chassis cover must be in place to allow for proper airflow and to prevent overheating.

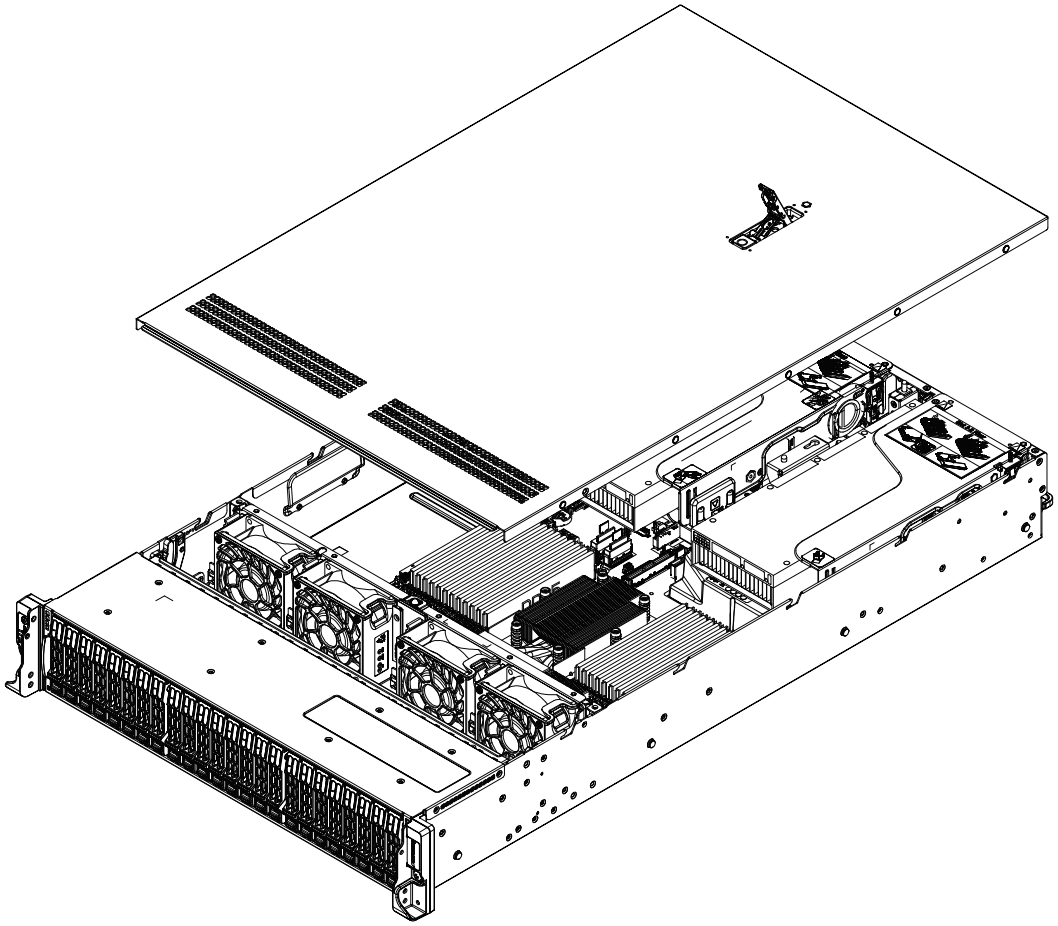

Figure 3-1. Removing the Chassis Cover

3.3 Processor and Heatsink Installation

Warning: When handling the processor package, avoid placing direct pressure on the label area of the fan.

Important:

- For the Processor/Heatsink installation you need to use a T20 screwdriver when opening/closing the CPU socket.
- Always connect the power cord last, and always remove it before adding, removing or changing any hardware components. Make sure that you install the processor into the CPU socket before you install the CPU heatsink.
- If you buy a CPU separately, make sure that you use an AMD-certified multi-directional heatsink only.
- Make sure to install the motherboard into the chassis before you install the CPU heatsink.
- When receiving a motherboard without a processor pre-installed, make sure that the plastic CPU socket cap is in place and none of the socket pins are bent; otherwise, contact your retailer immediately.
- Refer to the Supermicro website for updates on CPU support.

Installing the Processor and Heatsink

1. Unscrew the screw #1 holding down the force frame.

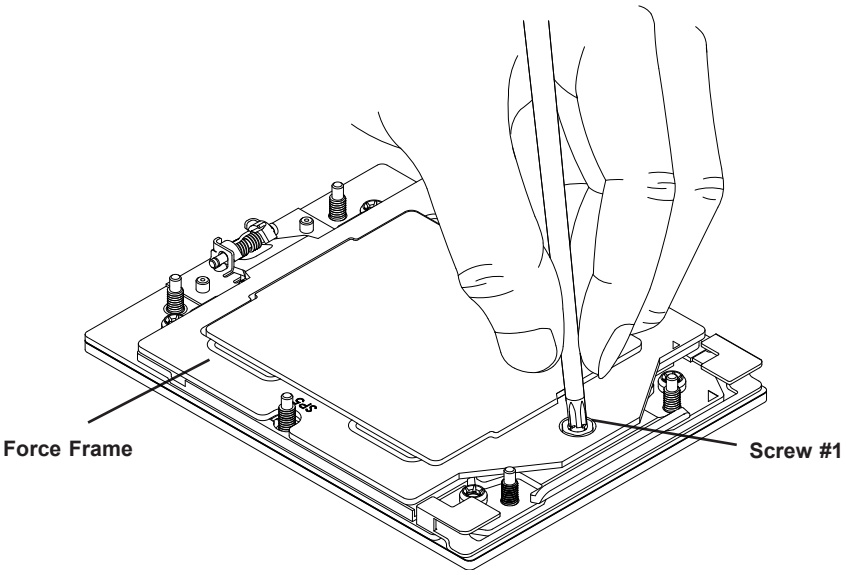

2. The spring-loaded force frame will raise up after the screw securing it (#1) is removed. Gently allow it to lift up to its stopping position.

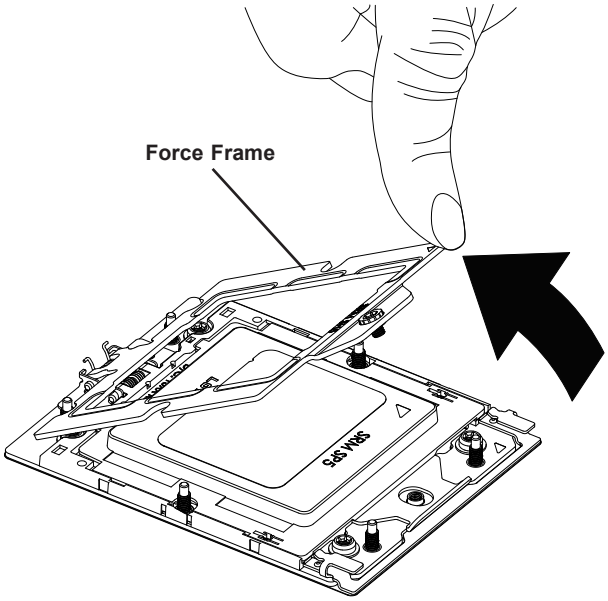

3. Lift the rail frame up by gripping the lift tabs near the front end of the rail frame. While keeping a secure grip of the rail frame, lift it to a position so you can do the next step of removing the external cap.

Note: The rail frame is spring loaded, so keep a secure grip on it as you lift it so it does not snap up.

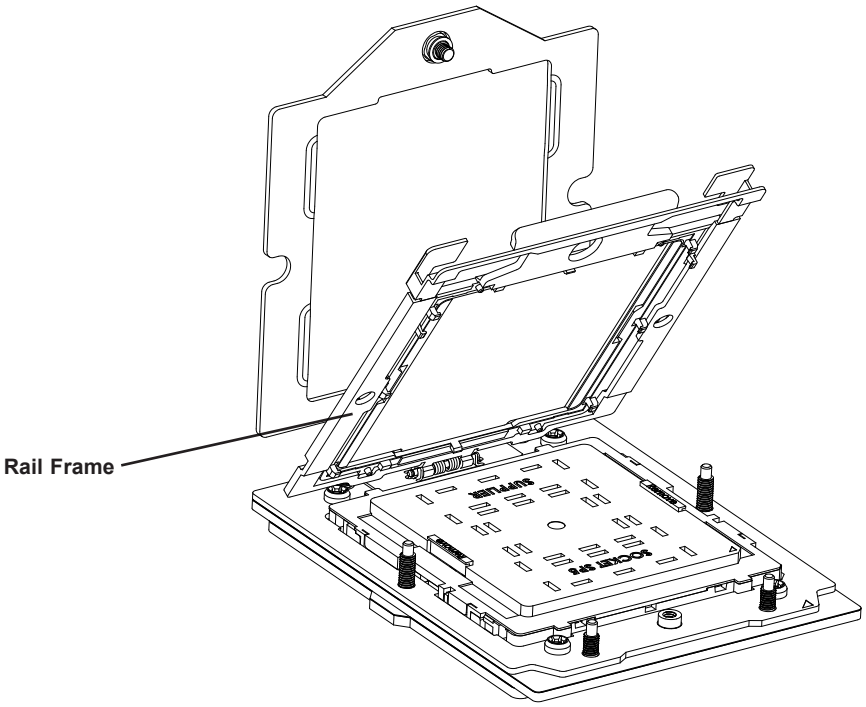

4. Remove the external cap from the rail frame by pulling it upwards through the rail guides on the rail frame.

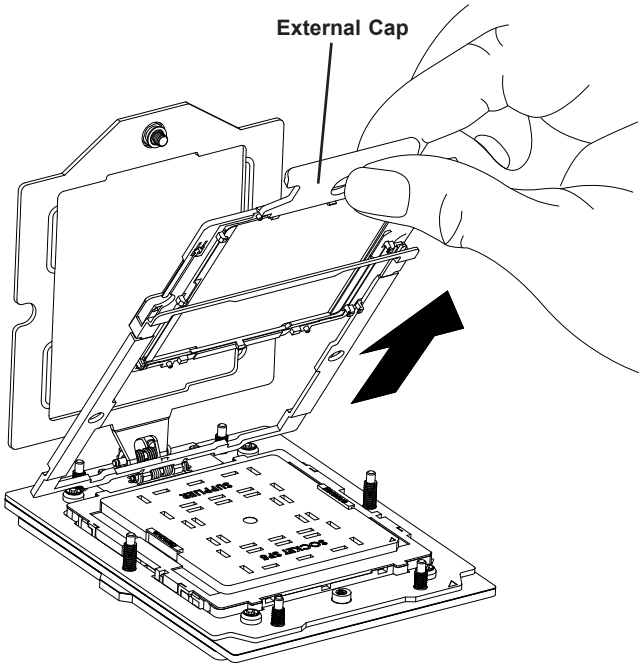

5. The CPU package is shipped from the factory with the carrier frame pre-assembled. Grip the handle of the carrier frame/CPU package assembly from its shipping tray, and while gripping the handle, align the flanges of the carrier frame onto the rails of the rail frame so its pins will be at the bottom when the rail frame is lowered later.

6. Slide the carrier frame/CPU package downwards to the bottom of the rail frame. Ensure the flanges are secure on the rails as you lower it downwards.

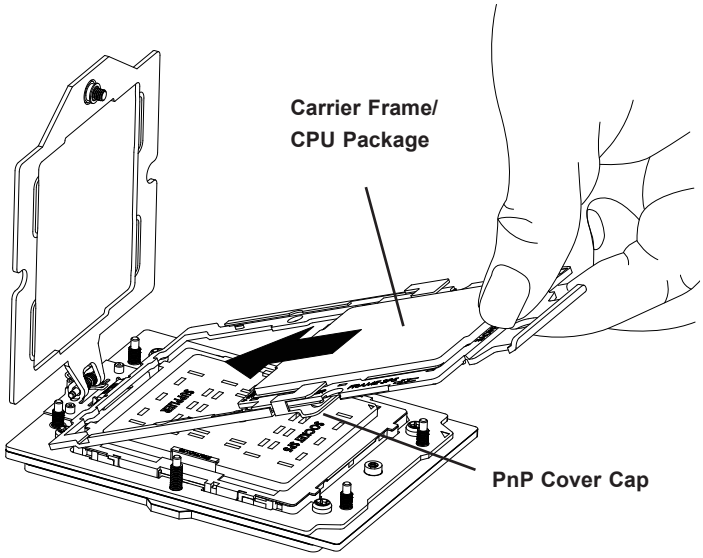

Note: You can only install the CPU inside the socket in one direction with the handle at the top. Make sure that it is properly inserted into the CPU socket before closing the rail frame plate. If it doesn't close properly, do not force it as it may damage your CPU. Instead, open the rail frame plate again, and double-check that the CPU is aligned properly.

7. Lift up the rail frame till it securely rests in upright position. Then remove the PnP cover cap from the CPU socket below. Grip the two lift tabs marked "Remove" at the middle of the cap and pull vertically upwards to remove the PnP cover cap.

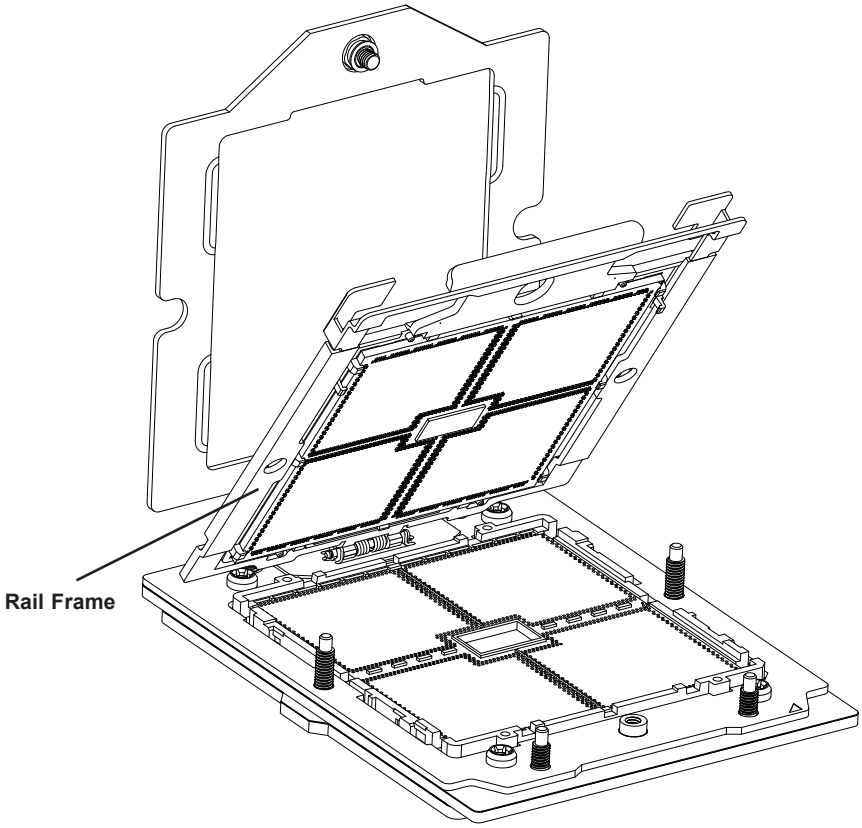

Warning! The exposed socket contacts are extremely vulnerable and can be damaged easily. Do not touch or drop objects onto the contacts and be careful removing the PnP cover cap and when placing the rail frame over the socket.

8. Gently lower the rail frame down onto the socket until the latches on the rail frame engage with the socket housing and it rests in place. DO NOT force it into place!

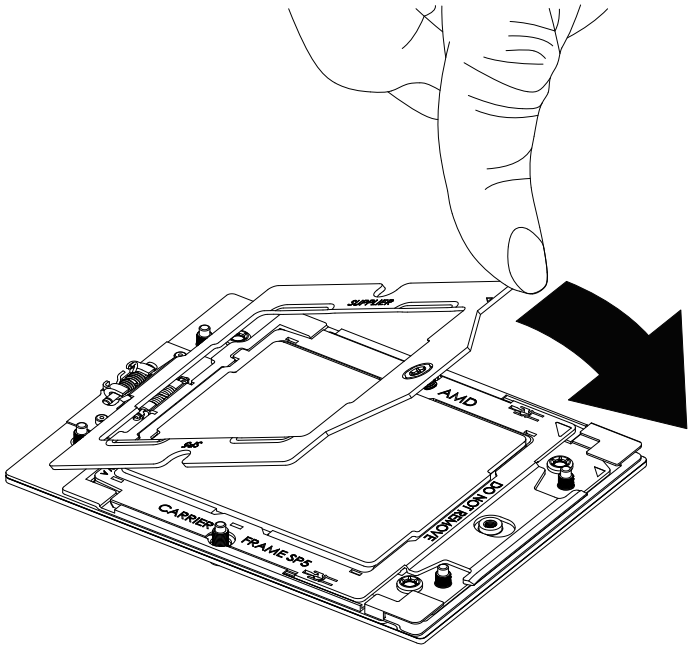

9. Note that the force frame is spring loaded and has to be held in place before it is secured. **Use a torque screwdriver, set it at 12.5~15.0 kgf-cm (10.85~13.01 lbf-in) with a Torx T20 screw head bit, to prevent damage to the CPU.**

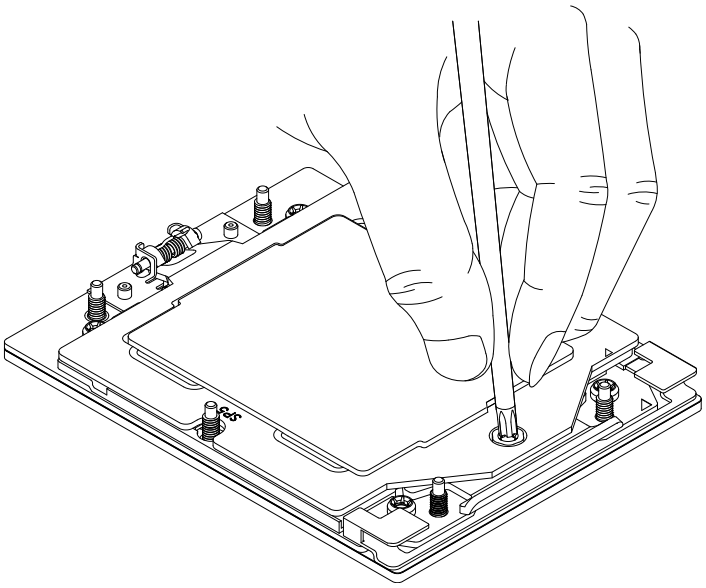

10. Replace and tighten the screws in the same order they were removed. When finished, the force frame will be secure over both the rail frame and CPU package.

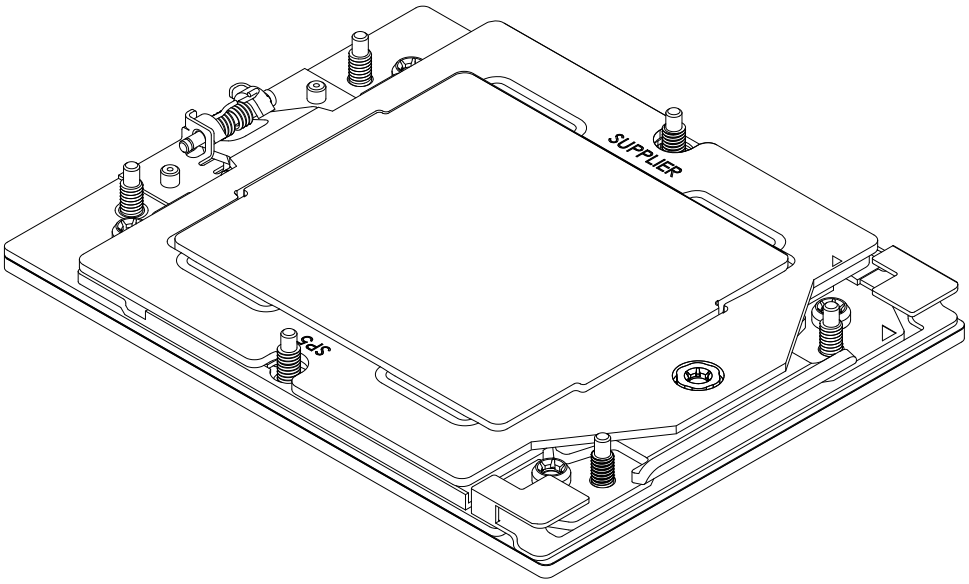

11. After the force frame is secured and the CPU package is in place, now you must install the heatsink to the frame. Lower the heatsink down till it rests securely over the six screw holes on CPU package on the socket frame.

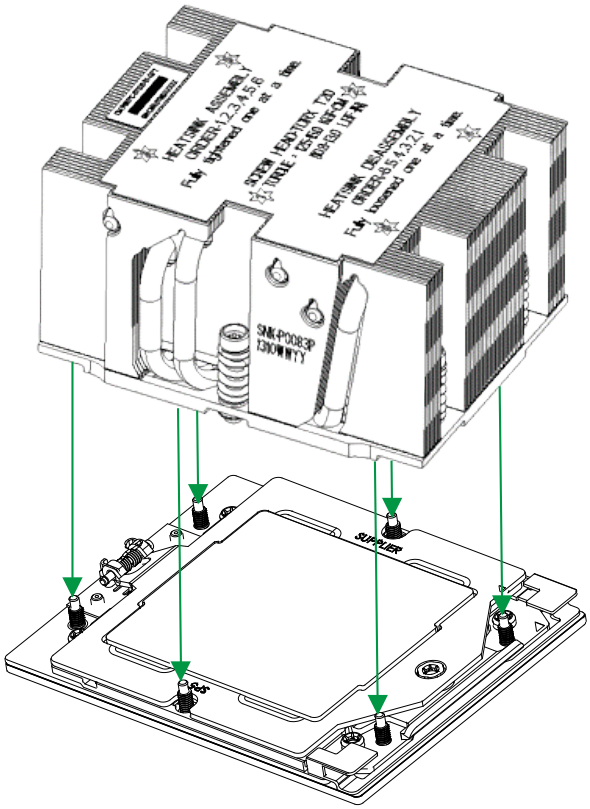

12. Using a diagonal pattern, tighten the six screws down on the heatsink in a clockwise fashion till it is secure. Use a torque screwdriver, set it at 12.5~15.0 kgfcm (10.85~13.01 lbf-in) with a Torx T20 screw head bit, to prevent damage to CPU socket/heatsink. The heatsink will now be secured and you have finished installing the processor and heatsink onto the motherboard. Repeat this procedure for any remaining CPU sockets on the motherboard.

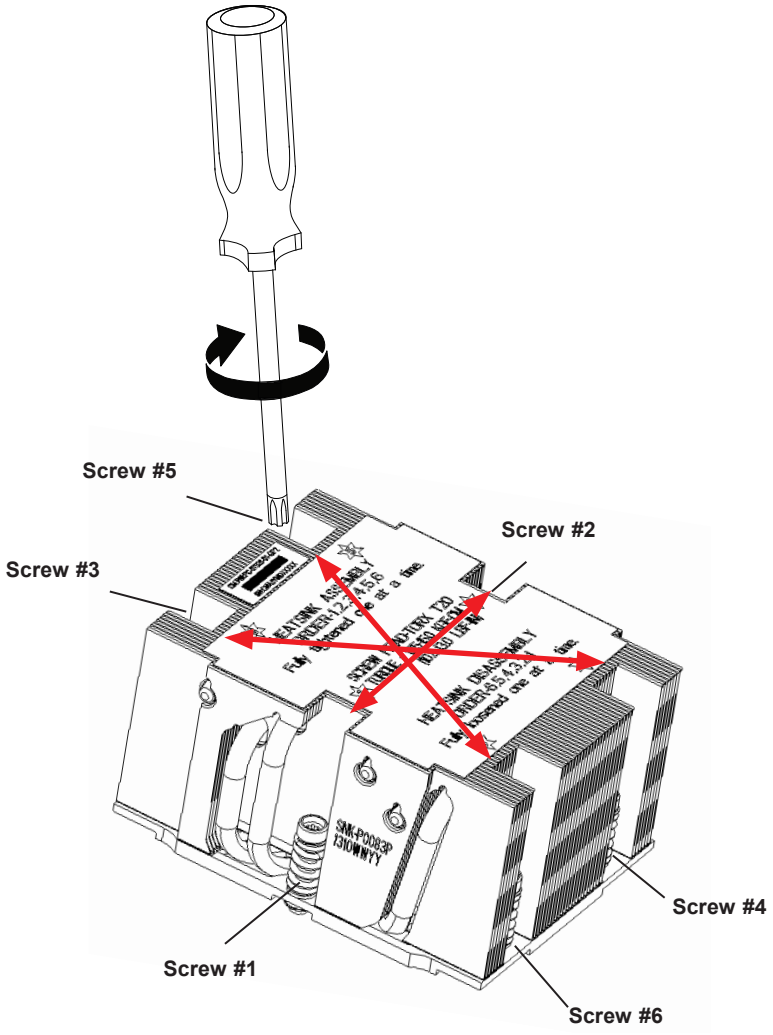

Un-installing the Processor and Heatsink

1. Remove the heatsink attached to the top of the CPU package by reversing the installation procedure.
2. Clean the thermal grease left by the heatsink on the CPU package lid to limit the risk of it contaminating the CPU package land pads or contacts in the socket housing.
3. Unscrewing the plate and lift the force frame to the vertical position.
4. Lift the rail frame using the lift tabs near the front end of the rail frame. Note that the rail frame is spring loaded, so be careful lifting it up into a vertical position.
5. Grip the handle of the carrier frame and pull upwards to extract it from the rail frame. Return the carrier frame/CPU package to its original shipping container.
6. Grip the handle on the external cap and return it to the rail frame sliding it downwards till it rests in the frame.
7. Gripping the rail frame, rotate it downwards till it rests above and locks over the socket housing in its horizontal position.
8. Push and rotate down the force frame till it is over the external cap and rail frame into a horizontal position.
9. While holding down the force frame, secure it back to the socket frame by securing screw #1 in place.

3.4 Memory Support and Installation

The H13SSH supports 24 DIMM slots with 2 DIMM per channel (supports up to 6 TB of ECC DDR5 RDIMM at 4000 MT/s(1R)/3600 MT/s (2R/3DS) speed with an EPYC™ 9004 processor installed; up to 6 TB of ECC DDR5 RDIMM at 4400 MT/s (1R)/4000 MT/s (2R/3DS) speed with an EPYC™ 9005 processor installed (motherboard revision 2.0 or later is required) or 12 DIMM slots with 1 DIMM per channel (supports up to 3 TB of ECC DDR5 RDIMM at 4800 MT/s speed with an EPYC™ 9004 processor installed; up to 3 TB of ECC DDR5 RDIMM at 5200 MT/s speed with an EPYC™ 9005 processor installed (motherboard revision 2.0 or later is required). Refer to the table below for additional memory information.

Note: Check the Supermicro website for possible updates to memory support.

DIMM Population Guide (1DPC)

Type	Channel																								
	F2	F1	E2	E1	D2	D1	C2	C1	B2	B1	A2	A1		G1	G2	H1	H2	I1	I2	J1	J2	K1	K2	L1	L2	Nodes per Socket (NPS) Supported
1 DIMM											V															NPS1
2 DIMM											V				V											NPS2, NPS1
4 DIMM							V				V				V				V							NPS4, NPS2, NPS1
6 DIMM							V		V		V		CPU 1		V		V		V							NPS2, NPS1
8 DIMM			V				V		V		V				V		V		V				V			NPS4, NPS2, NPS1
10 DIMM			V		V		V		V		V				V		V		V		V		V			NPS2, NPS1
12 DIMM	V		V		V		V		V		V				V		V		V		V		V		V	NPS4, NPS2, NPS1

DIMM Population Guide (2DPC)

Type	Channel																									
	F2	F1	E2	E1	D2	D1	C2	C1	B2	B1	A2	A1		G1	G2	H1	H2	I1	I2	J1	J2	K1	K2	L1	L2	Nodes per Socket (NPS) Supported
16 DIMM			V	V			V	V	V	V	V	V	CPU 2	V	V	V	V	V	V			V	V			NPS4, NPS2, NPS1
20 DIMM			V	V	V	V	V	V	V	V	V	V		V	V	V	V	V	V	V	V	V	V			NPS2, NPS1
24 DIMM	V	V	V	V	V	V	V	V	V	V	V	V		V	V	V	V	V	V	V	V	V	V	V	V	NPS4, NPS2, NPS1

Note: Fully populate the motherboard with validated memory modules to achieve the best memory performance. The NPS setting should be based on the application. Selecting "Auto“ in the BIOS will default to NPS1.

Populating RDIMM/RDIMM 3DS DDR5 Memory Modules with AMD EPYC™ 9004 Series Processor				
DIMM Type	DIMM Population		Maximum Frequency (MT/s)	
	DIMM1	DIMM2	5600 MT/s Grade DIMM	4800 MT/s Grade DIMM
RDIMM	-	1R	4800	4800
	1R	1R	4000	4000
	-	2R	4400	4400
	2R	2R	3600	3600
3DS RDIMM	-	2S2R (4 ranks)	4400	4400
	-	2S4R (8 ranks)	4400	4400
	2S2R (4 ranks)	2S2R (4 ranks)	3600	3600
	2S4R (8 ranks)	2S4R (8 ranks)	3600	3600

Populating RDIMM/RDIMM 3DS DDR5 Memory Modules with AMD EPYC™ 9005 Series Processor (Motherboard revision 2.0 or later is required)					
DIMM Type	DIMM Population		Maximum Frequency (MT/s)		
	DIMM1	DIMM2	6400 MT/s Grade DIMM	5600 MT/s Grade DIMM	4800 MT/s Grade DIMM
RDIMM	-	1R	5200	4800	4800
	1R	1R	4400	4000	4000
	-	2R	5200	4800	4800
	2R	2R	4000	3600	3600
3DS RDIMM	-	2S2R (4 ranks)	5200	4800	4800
	-	2S4R (8 ranks)	4400	4000	4000
	2S2R (4 ranks)	2S2R (4 ranks)	5200	4800	4800
	2S4R (8 ranks)	2S4R (8 ranks)	4000	3600	3600

DIMM Module Population Sequence

There is no specific order or sequence required when installing memory modules. However, do keep the following in mind:

- The blue slots must be populated first, follow the DIMM Population Guide.
- It is recommended that DDR5 DIMM modules of the same type, size and speed should be installed.
- Mixed DIMM speeds can be installed. However, all DIMMs will run at the speed of the slowest DIMM.
- The motherboard will support odd-numbered modules (1 or 3 modules installed). However, to achieve the best memory performance, fully populate the motherboard with validated memory modules.

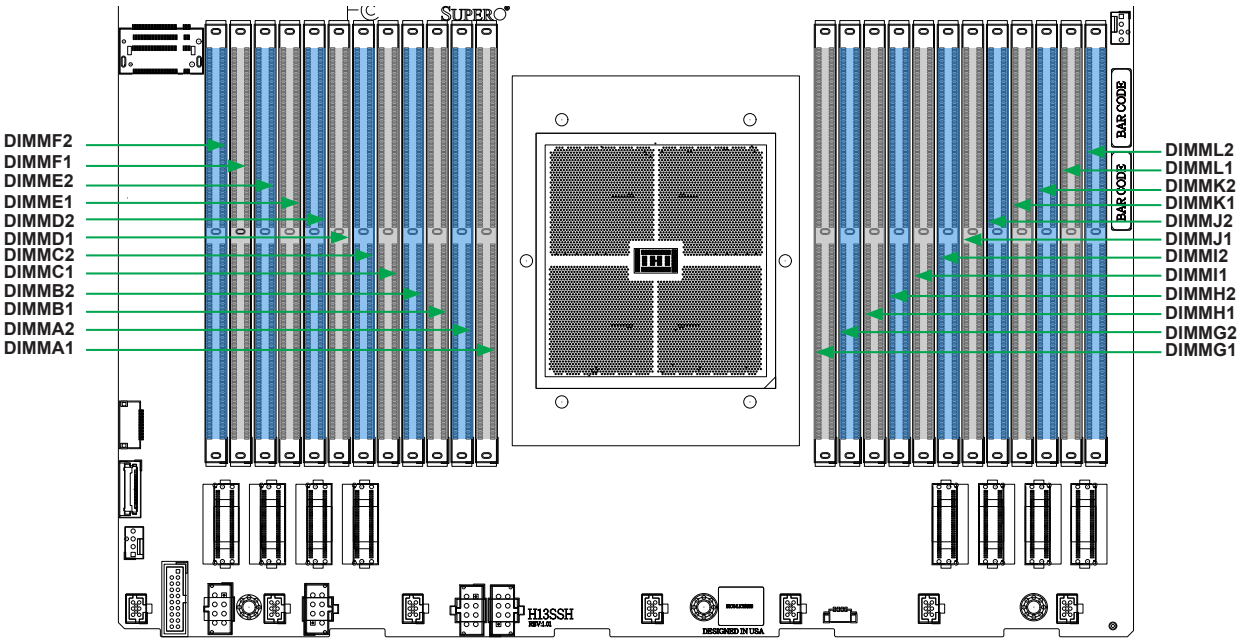

Figure 3-2. DIMM Numbering

DIMM Installation

1. Insert the desired number of DIMMs into the memory slots. See Memory Support for details on memory population guidelines.
2. Push the release tabs outwards on both ends of the DIMM slot to unlock it.
3. Align the key of the DIMM module with the receptive point on the memory slot.
4. Align the notches on both ends of the module against the receptive points on the ends of the slot.
5. Press both ends of the module straight down into the slot until the module snaps into place.
6. Press the release tabs to the lock positions to secure the DIMM module into the slot.

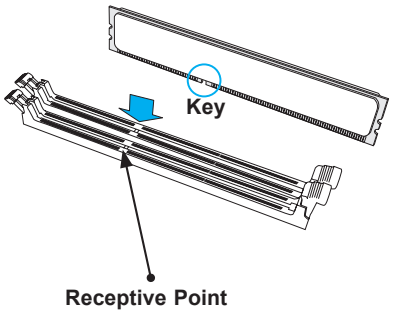

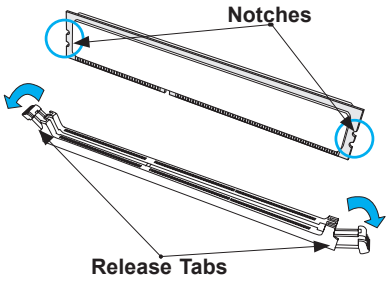

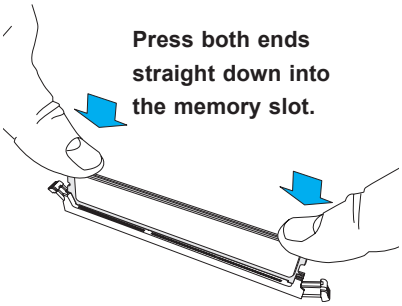

DIMM Removal

Press both release tabs on the ends of the DIMM module to unlock it. Once the DIMM module is loosened, remove it from the memory slot.

3.5 Motherboard Battery

The motherboard uses non-volatile memory to retain system information when system power is removed. This memory is powered by a lithium battery residing on the motherboard.

Replacing the Battery

1. Push aside the small clamp that covers the edge of the battery. When the battery is released, lift it out of the holder.

2. To insert a new battery, slide one edge under the lip of the holder with the positive (+) side facing up. Then push the other side down until the clamp snaps over it.

Note: Handle used batteries carefully. Do not damage the battery in any way; a damaged battery may release hazardous materials into the environment. Do not discard a used battery hazardous waste management agency to dispose of your used battery properly.

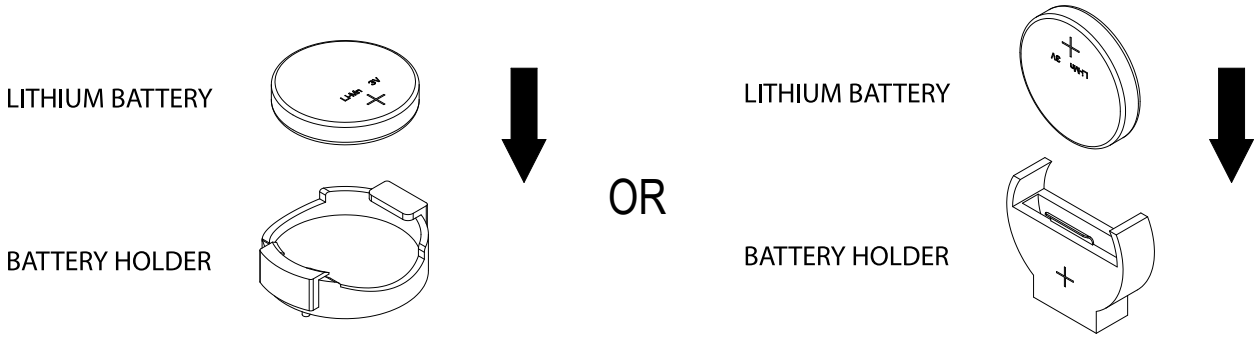

Figure 3-3. Battery Installation

Warning: There is a danger of explosion if the onboard battery is installed upside down (which reverses its polarities). This battery must be replaced only with the same or an equivalent type recommended by the manufacturer (BR2032).

3.6 Storage Drives

The storage drives are mounted in tool-less drive carriers that simplify their removal from the chassis. These carriers also help promote proper airflow. For compatible storage drives, see the AS -2115HS-TNR product page.

Figure 3-4. Logical Drive Numbers

Removing a Hot-Swap Drive Carrier from the Chassis

1. Press the release button on the drive carrier, which will extend the drive carrier handle.
2. Use the drive carrier handle to pull the drive out of the chassis.

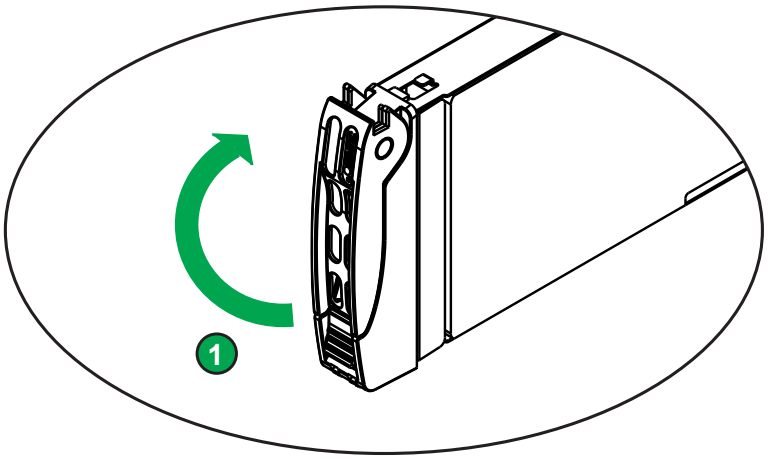

Figure 3-5. Removing a Drive Carrier

Installing a Drive

1. Position the drive above the carrier with the PCB side facing down and the connector end toward the rear of the carrier.

2. Tilt the drive to insert it onto the two posts on the right inside of the carrier.

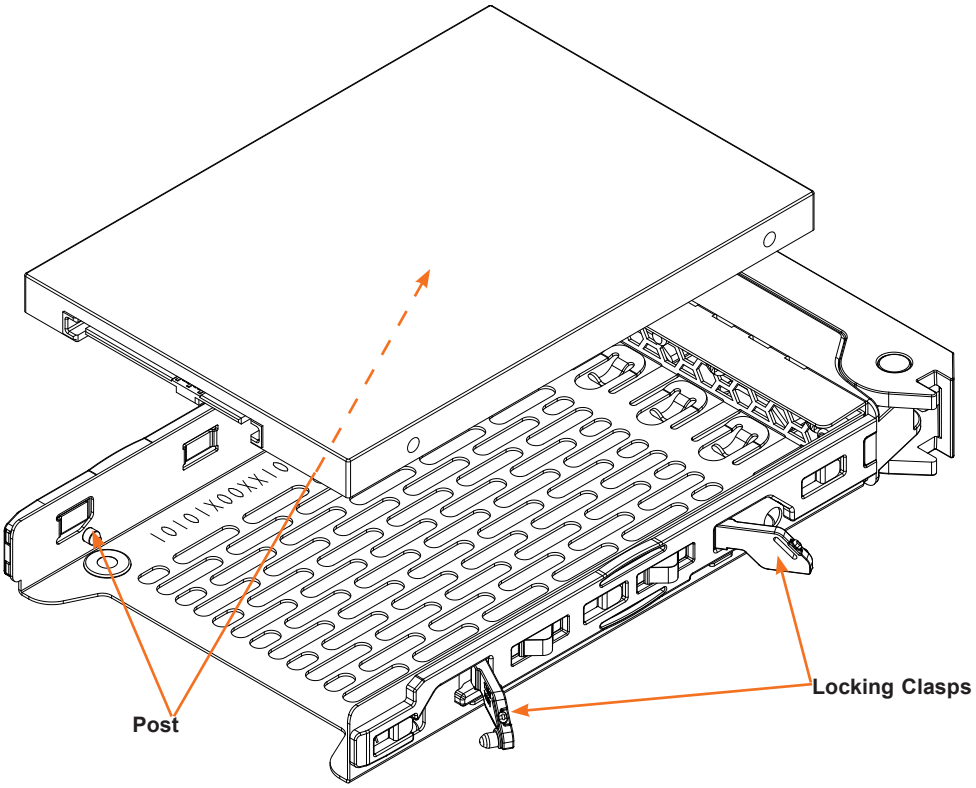

Figure 3-6. Installing a Drive into a Carrier

3. Pull out the two spring locking clasps and allow the drive to sit fully in the carrier, then close them to secure the drive.

4. Insert the drive carrier into its bay, keeping the release button on the right. When the carrier reaches the rear of the bay, the release handle will retract.

5. Push the handle in until it clicks into its locked position.

M.2 Solid State Drives

The H13SSH motherboard supports dual PCIe Gen 3 NVMe M.2 devices (M.2-C1, M.2-C2). M.2-C1 supports PCIe Gen 3 x4 and M.2-C2 supports PCIe Gen 3 x2. A blue latch helps to hold the M.2 SSDs in place. The default location of the blue latch on the motherboard supports the 22110 form factor. To support the 2280 form factor, make a request prior to purchasing the system. It is strongly not recommended to adjust the default blue latch location.

Note: M.2 slots are intended to be used for boot devices only. Any write intensive workloads may result in thermal issues and the M.2s overheating.

Installing Dual M.2 SSDs

1. Disconnect power from the motherboard or system.

2. Refer to the motherboard layout and locate the M.2 dual slot (J7).

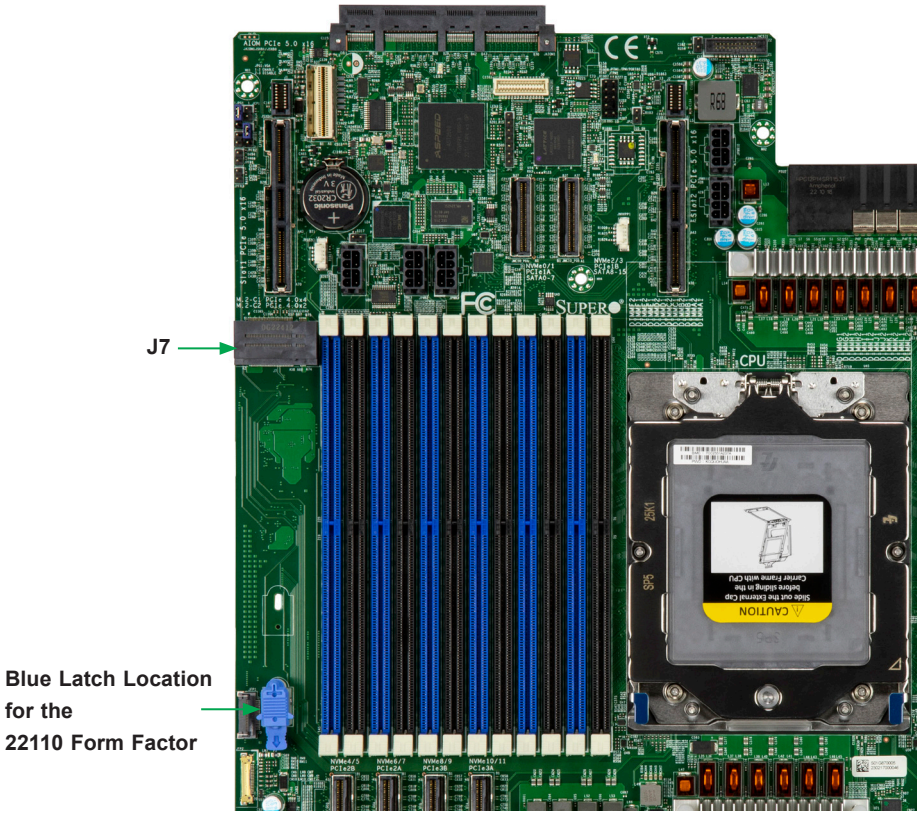

Figure 3-7. M.2 Slot and Latch Location

3. Insert a PCIe Gen 3 x4 M.2 SSD into the lower J7 slot. Next, follow the instructions from ❶ to ❸ in Figure 3-7.

4. Insert a PCIe Gen 3 x2 M.2 SSD into the upper J7 slot. Next, follow the instructions from ❹ to ❻ in Figure 3-7.

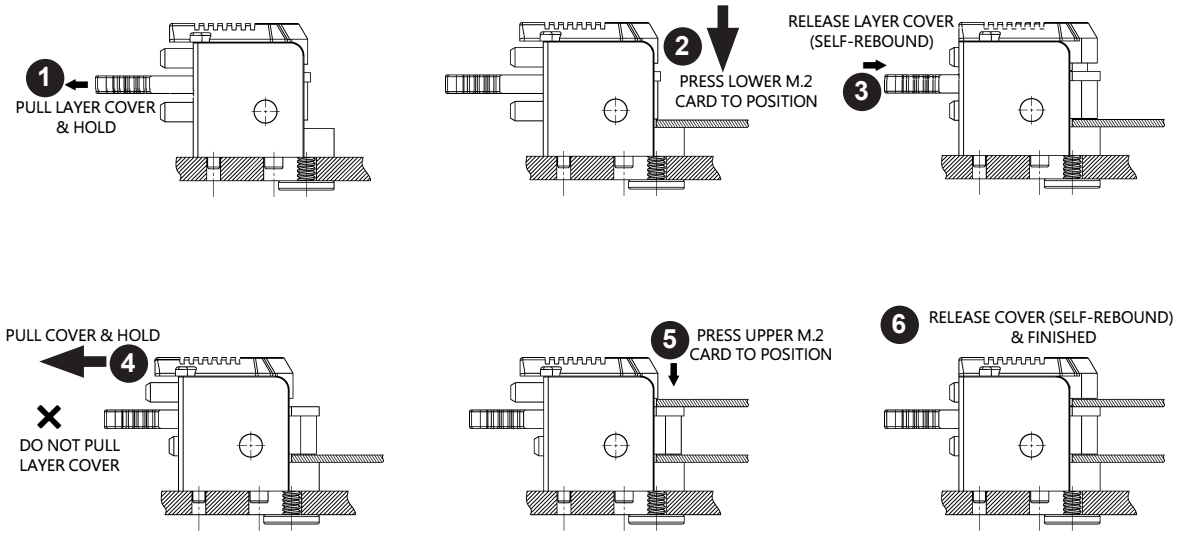

Figure 3-8. Installing a Drive into a Carrier

Releasing Dual M.2 SSDs

1. Follow the instructions below from ❶ to ❺ to remove M.2 SSDs.

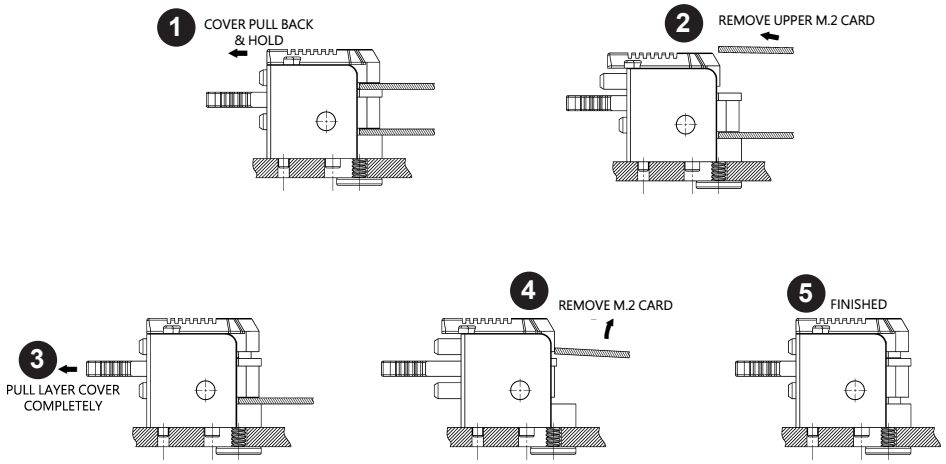

Figure 3-9. Releasing Dual M.2 SSDs

Hot-Swap for NVMe Drives

Supermicro servers support NVMe surprise hot-swap. For even better data security, NVMe *orderly* hot-swap is recommended. NVMe drives can be ejected and replaced remotely using BMC.

Ejecting a Drive

1. **BMC > Server Health > NVMe SSD**
2. Select Device, Group, and Slot, and click **Eject**. After ejecting, the drive Status LED indicator turns green.
3. Remove the drive.

Note that *Device* and *Group* are categorized by the CPLD design architecture.

A *Slot* is the slot number on which the NVMe drives are mounted. Also, note that only one drive can be ejected at a time.

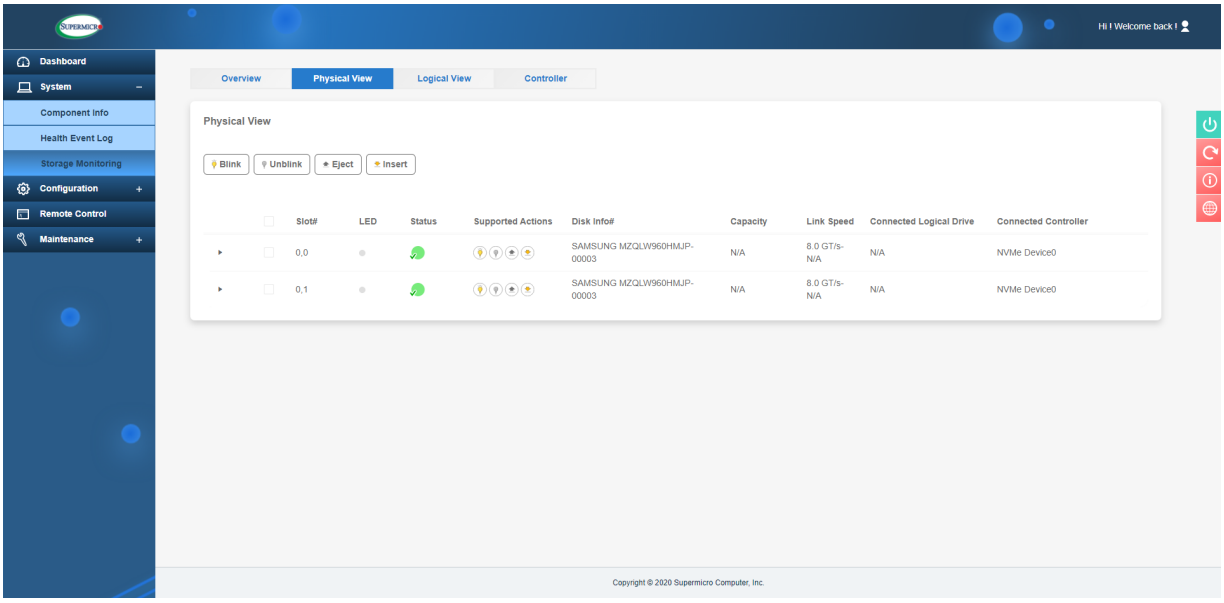

Figure 3-10. BMC Screenshot

Replacing the Drive

1. Insert the replacement drive.
2. **BMC > System > Storage Monitor > Physical View**
3. Select Device, Group, and slot and click **Insert**. The drive Status LED indicator flashes red, then turns off. The Activity LED turns blue.

3.7 System Cooling

Fans

Four 8-cm heavy-duty fans provide cooling for the system. Fans are hot-swapped and can be replaced without powering down the system. The electrical connections are automatically made when a fan is inserted into its slot.

Make sure the chassis cover is only off for a short time and makes a good seal when replaced for the cooling air to circulate properly through the system.

Changing a System Fan

1. Determine which fan is failing using BMC if possible. If not, remove the chassis cover while the power is on and examine the fans to determine which one has failed.
2. Squeeze the fan tabs of the failed fan and lift the fan housing up and out of the chassis.
3. To install a fan, push it into the proper location until it clicks.
4. Finish by fully closing the cover and pushing the system back into the rack.

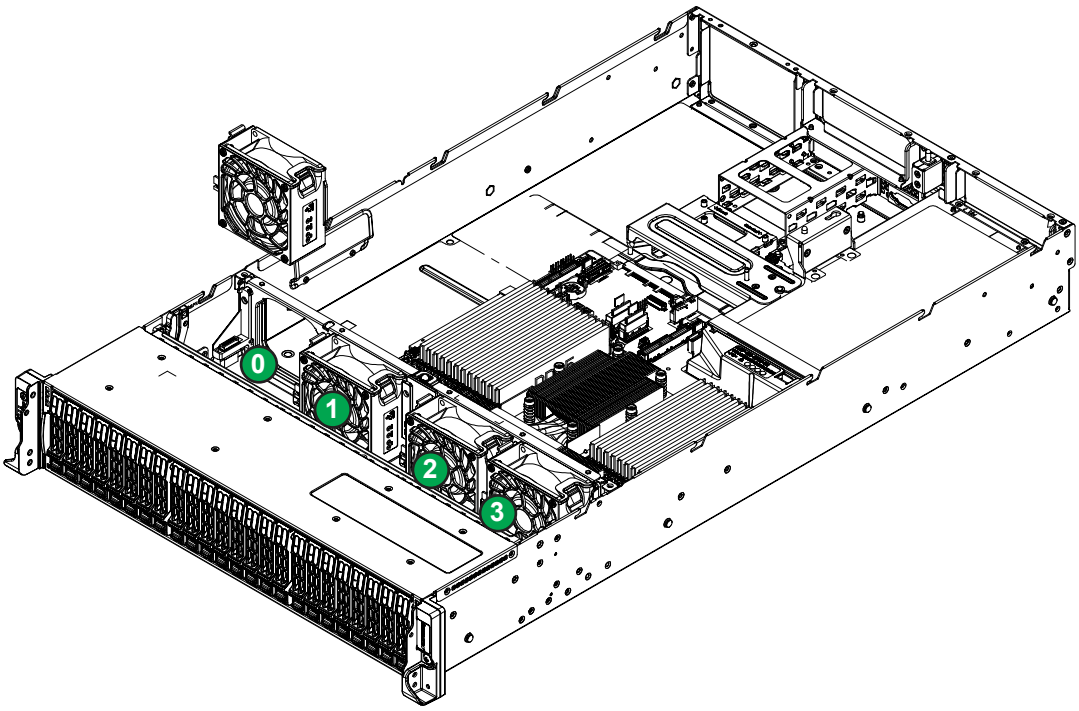

Figure 3-11. Installing a Fan (positions indicated)

Note: The graphics contained in this user's manual are for illustration purposes only. The components installed in your system may or may not look exactly the same as the graphics show in the manual.

Air Shrouds

Air shroud concentrate airflow to maximize fan efficiency. The AS -2115HS-TNR includes one air shroud for the CPU and the DIMMs.

Air Shroud for Memory

One air shroud cools the DIMM slots controlled by CPU (see figure below).

1. Remove the system from the rack and remove the cover as described previously.
2. Place the air shroud over twenty-four CPU-controlled DIMM slots, as illustrated below.
3. Close the cover and push the system back into the rack.

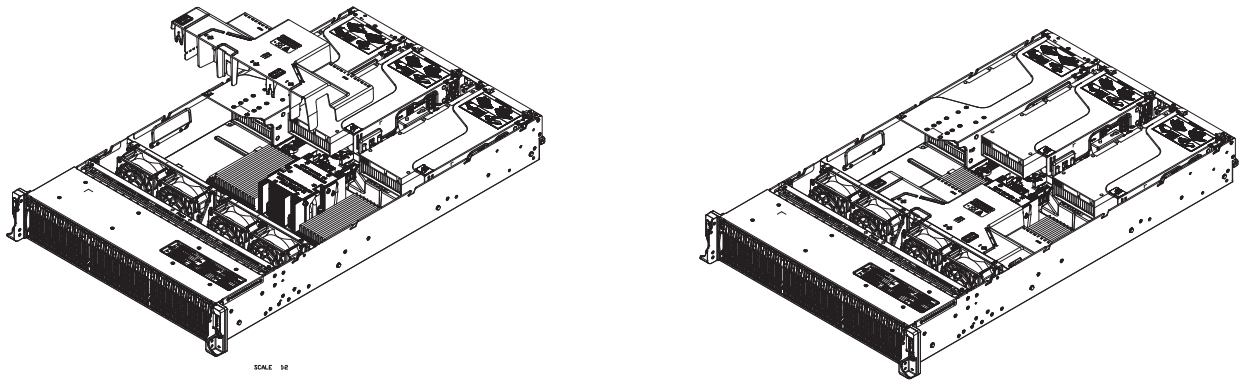

Figure 3-12. Installing Air Shrouds for the CPU and DIMMs

3.8 Expansion Cards

The system accepts up to eight PCIe 5.0 x 8 or up to four PCIe 5.0 x16 full-height 10.5"L expansion cards, mounted on riser cards and brackets.

Figure 3-13. Expansion Card Slots

Expansion Card Slot Configurations

Enabling any of the eight expansion card slots in this system requires optional parts that are sold separately. See below for expansion card slot configuration ordering information.

Each expansion card slot is assigned to specific motherboard PCIe x8 MCIO connectors or PCIe x16 slots. The following table shows the possible expansion card slot configuration options and the corresponding motherboard PCIe connector assignment.

Expansion Card Slot Configurations		
Slot Configurations	**Slot Width**	**Motherboard Connection**
Up to eight PCIe x8 slots	Slot 1: PCIe x8	Cable connection from JMCIO_G2A
	Slot 2: PCIe x8	Cable connection from JMCIO_G2B
	Slot 3: PCIe x8	Cable connection from Slot2 PCIe 5.0 x16
	Slot 4: PCIe x8	
	Slot 5: PCIe x8	Cable connection from JMCIO_G0A
	Slot 6: PCIe x8	Cable connection from JMCIO_G0B
	Slot 7: PCIe x8	Edge connection from Slot1 PCIe 5.0 x16
	Slot 8: PCIe x8	
Up to four PCIe x16 slots	Slot 1: PCIe x16	Cable connection from JMCIO_G2A + JMCIO_G2B
	Slot 2: No connection	No connection
	Slot 3: PCIe x16	Cable connection from Slot2 PCIe 5.0 x16
	Slot 4: No connection	No connection
	Slot 5: PCIe x16	Cable connection from JMCIO_G0A + JMCIO_G0B
	Slot 6: No connection	No connection
	Slot 7: PCIe x16	Edge connection from Slot1 PCIe 5.0 x16
	Slot 8: No connection	No connection

Installing a Riser Card

Before following the procedure below to install expansion cards, first turn off and remove power from the system as described in Section 3.1 then remove the top cover.

Installing Expansion Cards

1. Remove any slimline SAS cables connected to the riser card and pull up the riser card brackets.
2. Looking from the node rear, open the clip of each slot on the right.
3. Remove the blank PCI shield from the chassis.
4. Slide the expansion card shield into the open shield slot while plugging the expansion card into the riser card.

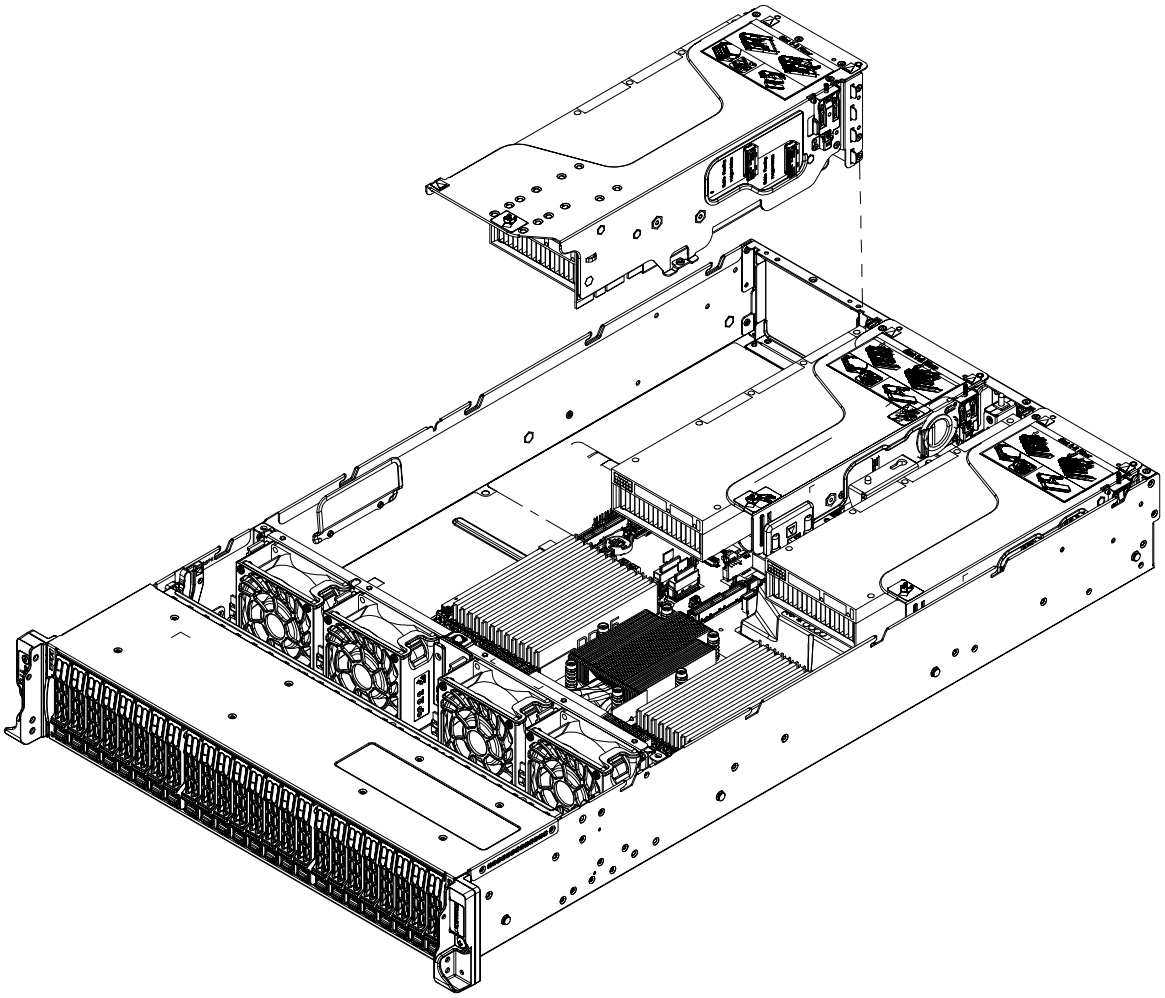

Figure 3-14. Installing Expansion Cards

3.9 AIOM Network Cards

The system supports up to two Supermicro AIOM networking slot (OCP 3.0 compatible) (2nd AIOM is optional, need additional parts).

Figure 3-15. AIOM Chassis Slot

AIOM Configuration			
Item	**Mechanical**	**Electrical**	**Thermal**
A1	Small Form Factor, OCP 3.0	x16	Up to 15 W*

*AIOM cards exceeding the 15 W Slot Power Envelope may require restricted conditions to meet thermal specifications of the AIOM card. Contact your Supermicro account representative for more information.

Installing AIOM Cards

1. Remove power as described in Section 3.1.
2. Remove the blank cover plate (A1), unscrewing the thumbscrew.
3. Slide the AIOM card in the opening until it seats in the connector slot.
4. Secure with the thumbscrew.

3.10 Power Supply

The system includes two hot-plug power supply modules. These modules will automatically sense and operate at an input voltage between 100 V to 240 V. Note that different input voltages will result in different maximum power output levels.

In the event of a power module failure, the other power module will continue to power the system on its own. Failed power supply modules can be replaced without powering down the system. Replacement modules can be ordered directly from Supermicro.

An amber light on the power supply is illuminated when the power is switched off. A green light indicates that the power supply is operating.

Replacing the Power Supply

1. Unplug the AC power cord from the failed power supply module.
2. Push and hold the release tab on the back of the power supply.
3. Grasp the handle of the power supply and pull it out of its bay.
4. Push the new power supply module into the power bay until it clicks into the locked position.
5. Plug the AC power cord back into the power supply module.

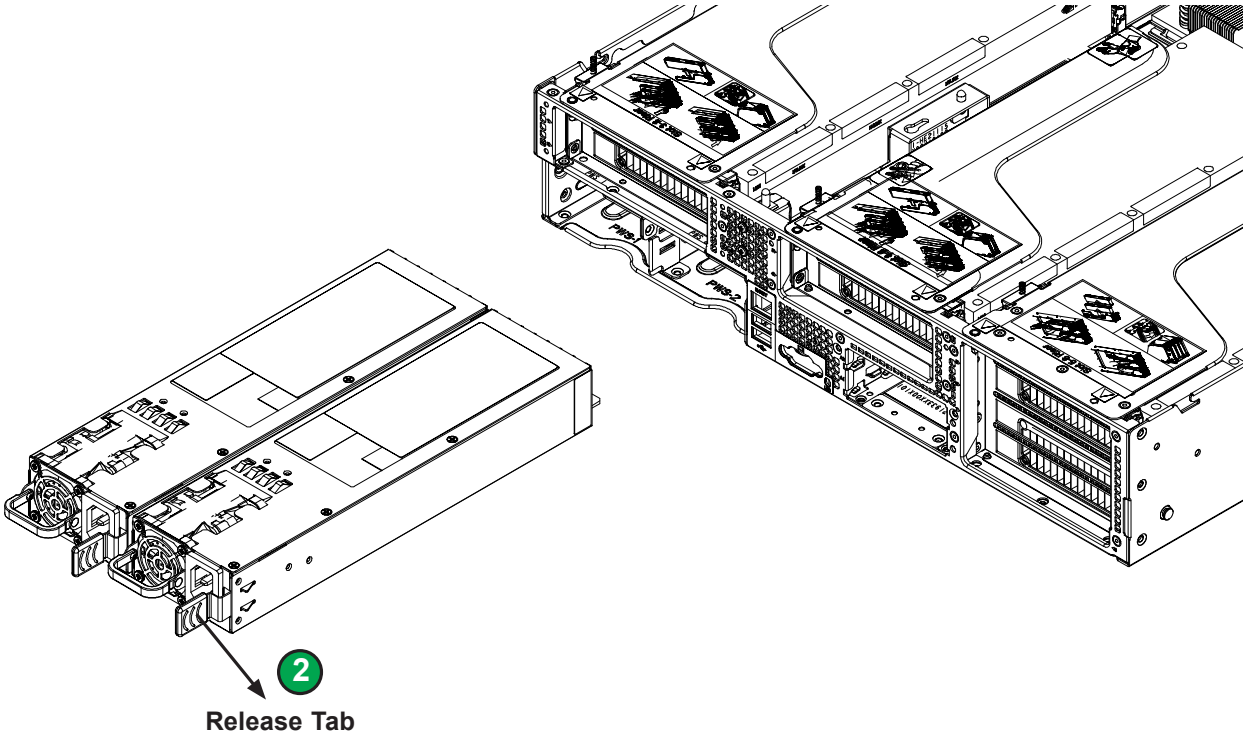

Figure 3-16. Installing a Power Supply Module

3.11 Cable Routing Diagrams

The below diagrams indicate the cable routing for the storage, PCIe, IO, and power cables. When disconnecting cables to add or replace components, refer to the diagrams so you can reroute them in the same manner. If cables are not connected or routed properly it may lead to device detection or performance issues.

AS -2115HS-TNR Configurations

Configuration #	Front	Rear**
#1 (24 NVMe) **+ up to 1 PCIe x16 or 2 PICe x8** **+ 1 AIOM**		
#2 (24 SATA) **+ up to 4 PCIe x16 or 8 PICe x8** **+ 1 AIOM** **+ 2nd AIOM Option**		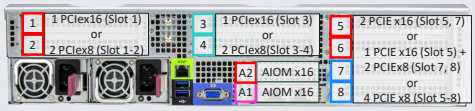
#3 (20 NVMe + 4 SAS) **+ up to 2 PCIe x16 or 4 PICe x8** **+ 1 AIOM** *SAS requires AOC and will use 1x PCIe slot		
#4 (24 SAS*) **+ up to 4 PCIe x16 or 8 PICe x8** **+ 1 AIOM** **+ 2nd AIOM Option** *SAS requires AOC		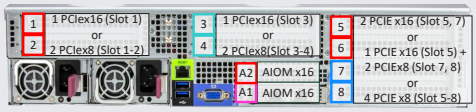

From Riser slot 1 — From Riser slot 2 — From MCIO Hybrid port for SATA, or from SAS AOC
From MCIO port — From AIOM slot

**No PCIe riser cards by default, All risers are optional
2nd AIOM please refer to 6.2 PCIe optional parts

Configuration #	Front	Rear**
#5 (N/A) **+ up to 4 PCIe x16 or 8 PICe x8** **+ 1 AIOM** **+ 2nd AIOM Option**		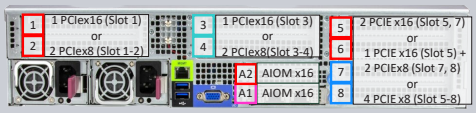
#6 (16 SAS) **+ up to 4 PCIe x16 or 8 PICe x8** **+ 1 AIOM** **+ 2nd AIOM Option** *SAS requires AOC		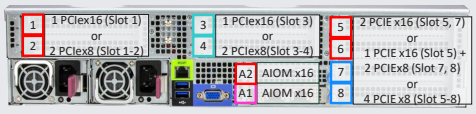
#7 (20 NVMe) **+ up to 2 PCIe x16 or 4 PICe x8** **+ 1 AIOM**		
#8 (16 SATA) **+ up to 4 PCIe x16 or 8 PICe x8** **+ 1 AIOM** **+ 2nd AIOM Option**		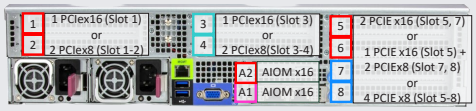

From Riser slot 1 | From Riser slot 2 | From MCIO Hybrid port for SATA, or from SAS AOC
From MCIO port | From AIOM slot

**No PCIe riser cards by default, All risers are optional
2nd AIOM please refer to 6.2 PCIe optional parts

24 NVME + 1 PCIe x16 or 2 PCIe x8

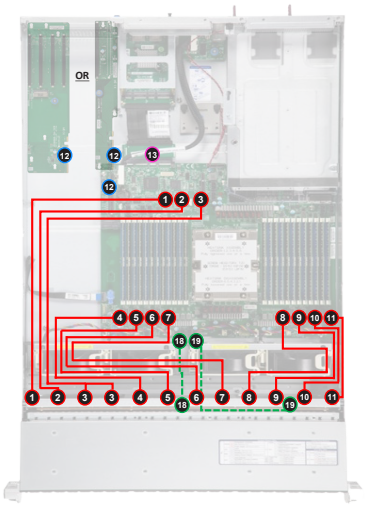

Front Storage Cables

	Cable	Description	MB Port	Backplane/Riser Port
1	CBL-MCIO-1250M5-Z	NVMe 0-1	JMCIO_P0A	BP NVMe0/1
2	CBL-MCIO-1255M5	NVMe 2-3	JMCIO_P0B	BP NVMe2/3
3	CBL-GNZ4-1265M5Y-X	NVMe 4-7	Slot2 PCIe 5.0 x16	BP NVMe4/5 – 6/7
4	CBL-MCIO-1340M5R	NVMe 8-9	JMCIO_G0B	BP NVMe8/9
5	CBL-MCIO-1245M5-Z	NVMe 10-11	JMCIO_G0A	BP NVMe10/11
6	CBL-MCIO-1250M5-Z	NVMe 12-13	JMCIO_G1B	BP NVMe12/13
7	CBL-MCIO-1260M5	NVMe 14-15	JMCIO_G1A	BP NVMe14/15
8	CBL-MCIO-1330M5	NVMe 16-17	JMCIO_G2B	BP NVMe16/17
9	CBL-MCIO-1326M5	NVMe 18-19	JMCIO_G2A	BP NVMe18/19
10	CBL-MCIO-1221M5	NVMe 20-21	JMCIO_G3B	BP NVMe20/21
11	CBL-MCIO-1218M5-1	NVMe 22-23	JMCIO_G3A	BP NVMe22/23
18	CBL-PWEX-1142B-20	BP1 Power	JPWR5	JPWR1
19	CBL-PWEX-1142-40	BP2 Power	JPWR6	JPWR2

Rear PCIe Slot Cables

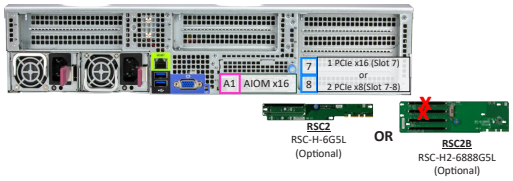

Riser Card (slot 7 or 7~8)

	Cable/Part	Description	MB Port	Riser Port
12	NA	PCIe x16 (Slot 7)	Slot1 PCIe 5.0 x16	RSC2 Gold finger
13	CBL-GNZ5-1307	AIOM x16 (AIOM 1)	JAIOM1	N/A

OR

	Cable/Part	Description	MB Port	Riser Port
12	NA	PCIe x8 (Slot 7 & 8)	Slot1 PCIe 5.0 x16	RSC2B Gold finger
13	CBL-GNZ5-1307	AIOM x16 (AIOM 1)	JAIOM1	N/A

From Riser slot 1 | From Riser slot 2 | From MCIO port | From AIOM slot | From MCIO Hybrid port for SATA | Power Cable/ i2C Cable | SAS AOC

24 SATA + 4 PCIe x16 or 8 PCIe x8

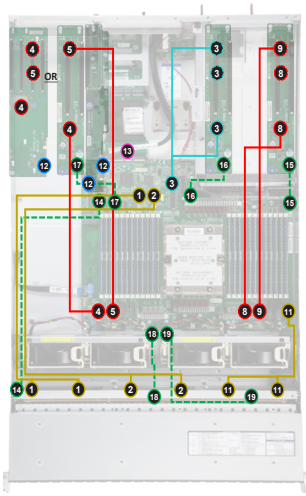

Front Storage Cables

	Cable	Description	MB Port	Backplane/Riser Port
1	CBL-MCIO-1255S4Y	SATA 0-7	JMCIO_P0A	BP SAS 0-3/ 4-7
2	CBL-MCIO-1275S4Y	SATA 8-15	JMCIO_P0B	BP SAS 8-11/ 12-15
11	CBL-MCIO-1223S4Y	SATA 16-23	JMCIO_G3A	BP SAS 16-19/ 20-23
14	CBL-CDAT-1062	i2C Cable	JRSI2C1	BP BMC I2C
18	CBL-PWEX-1142B-20	BP1 Power	JPWR5	JPWR1
19	CBL-PWEX-1142-40	BP2 Power	JPWR6	JPWR2

Rear PCIe Slot Cables

1st Riser (slot 1 or 1+2)

	Cable/Part	Description	MB Port	Riser Port
8	CBL-MCIO-1335M5R	PCIe x16 (Slot 1)	JMCIO_G2B	RSC1 JPCIE1B1
9	CBL-MCIO-1245M5R		JMCIO_G2A	RSC1 JPCIE1A1
13	CBL-GNZ5-1307	AIOM x16 (AIOM 1)	JAIOM1	N/A
15	CBL-PWEX-1136YB-25	RSC1 power	JPWR4	JPWR1

OR

	Cable/Part	Description	MB Port	Riser Port
8	CBL-MCIO-1245M5-Z	PCIe x8 (Slot 1 & 2)	JMCIO_G2B	RSC1 JPICE2A1
9	CBL-MCIO-1245M5R		JMCIO_G2A	RSC1 JPCIE1A1
13	CBL-GNZ5-1307	AIOM x16 (AIOM 1)	JAIOM1	N/A
15	CBL-PWEX-1136YB-25	RSC1 power	JPWR4	JPWR1

+

2nd Riser (slot 3 or 3+4)

	Cable/Part	Description	MB Port	Riser Port
3	CBL-GNZ4-1227M5YRR16	PCIe x16 (Slot 3)	Slot2 PCIe 5.0 x16	RSC2 JPCIE1A1 and JPCIE1B1
13	CBL-GNZ5-1307	AIOM x16 (AIOM 1)	JAIOM1	N/A
16	CBL-PWEX-1136YB-25	RSC2 power	JPWR10	JPWR1

OR

	Cable/Part	Description	MB Port	Riser Port
3	CBL-GNZ4-1227M5YR21	PCIe x8 (Slot 3 & 4)	Slot2 PCIe 5.0 x16	RSC2 JPCIE1A1 and JPICE2A1
13	CBL-GNZ5-1307	AIOM x16 (AIOM 1)	JAIOM1	N/A
16	CBL-PWEX-1136YB-25	RSC2 power	JPWR10	JPWR1

+

3rd Riser (slot 5+7 or 5+7+8 or 5 ~ 8)

	Cable/Part	Description	MB Port	Riser Port
12	N/A	RSC3 + RSC4 2x PCIe x16 (Slot 5&7)	Slot1 PCIe 5.0 x16	RSC4 Gold Finger
4	CBL-MCIO-1335M5R		JMCIO_G0B	RSC3 JPCIE1B1
5	CBL-MCIO-1245M5R		JMCIO_G0A	RSC3 JPCIE1A1
17	CBL-PWEX-1136YB-25	RSC3 power	JPWR3	JPWR1
13	CBL-GNZ5-1307	AIOM x16 (AIOM 1)	JAIOM1	N/A

OR

	Cable/Part	Description	MB Port	Riser Port
12	N/A	RSC3B 1x PCIe x16 (Slot 5) + 2x PCIe x8 (Slot 7, 8)	Slot1 PCIe 5.0 x16	RSC3B Gold Finger
4	CBL-MCIO-1245M5-Z		JMCIO_G0B	RSC 3B JPICE2B1
5	CBL-MCIO-1245M5-Z		JMCIO_G0A	RSC3B JPICE2A1
13	CBL-GNZ5-1307	AIOM x16 (AIOM 1)	JAIOM1	N/A

OR

	Cable/Part	Description	MB Port	Riser Port
12	N/A	RSC3B 4x PCIe x8 (Slot 5~8)	Slot1 PCIe 5.0 x16	RSC3B Gold Finger
4	CBL-MCIO-1245M5-Z		JMCIO_G0B	RSC3B JPCIE1A1
5	CBL-MCIO-1245M5-Z		JMCIO_G0A	RSC3B JPICE2A1
13	CBL-GNZ5-1307	AIOM x16 (AIOM 1)	JAIOM1	N/A

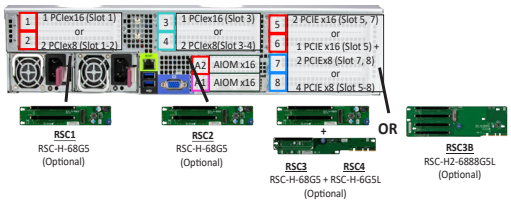

From Riser slot 1 | From Riser slot 2 | From MCIO port | From AIOM slot | From MCIO Hybrid port for SATA | Power Cable/ i2C Cable | SAS AOC

20 NVMe + 4 SAS + 2 PCIe x16 or 4 PCIe x8

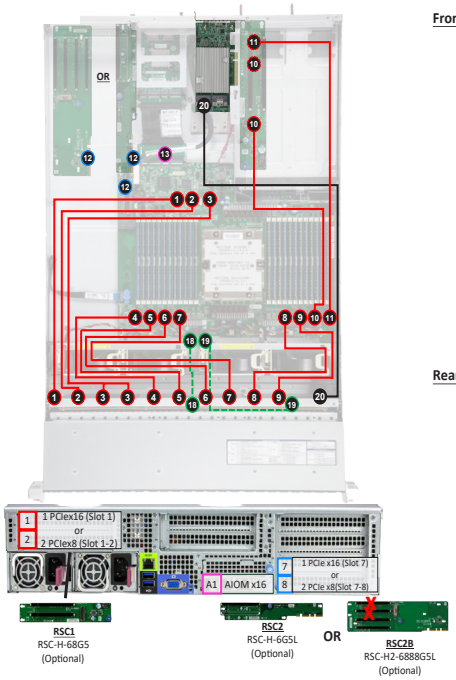

Front Storage Cables

	Cable	Description	MB Port	Backplane/Riser Port
1	CBL-MCIO-1250M5-Z	NVMe 0-1	JMCIO_P0A	BP NVMe0/1
2	CBL-MCIO-1255M5	NVMe 2-3	JMCIO_P0B	BP NVMe2/3
3	CBL-GNZ4-1265M5Y-X	NVMe 4-7	Slot2 PCIe 5.0 x16	BP NVMe4/5 – 6/7
4	CBL-MCIO-1340M5R	NVMe 8-9	JMCIO_G0B	BP NVMe8/9
5	CBL-MCIO-1245M5-Z	NVMe 10-11	JMCIO_G0A	BP NVMe10/11
6	CBL-MCIO-1250M5-Z	NVMe 12-13	JMCIO_G1B	BP NVMe12/13
7	CBL-MCIO-1260M5	NVMe 14-15	JMCIO_G1A	BP NVMe14/15
8	CBL-MCIO-1330M5	NVMe 16-17	JMCIO_G2B	BP NVMe16/17
9	CBL-MCIO-1326M5	NVMe 18-19	JMCIO_G2A	BP NVMe18/19
18	CBL-PWEX-1142B-20	BP1 Power	JPWR5	JPWR1
19	CBL-PWEX-1142-40	BP2 Power	JPWR6	JPWR2
20	CBL-SAST-1296F-100	SAS 20-23	SAS AOC	SAS 20-23

Rear PCIe Slot Cables

1st Riser (slot 1 or 1+2)

	Cable/Part	Description	MB Port	Riser Port
10	CBL-MCIO-1335M5R	PCIe x16 (Slot 1)	JMCIO_G3B	RSC1 JPCIE1B1
11	CBL-MCIO-1245M5R		JMCIO_G3A	RSC1 JPCIE1A1
13	CBL-GNZ5-1307	AIOM x16 (AIOM 1)	JAIOM1	N/A
15	CBL-PWEX-1136YB-25	RSC1 power	JPWR4	JPWR1

OR

	Cable/Part	Description	MB Port	Riser Port
10	CBL-MCIO-1245M5-Z	PCIe x8 (Slot 1 & 2)	JMCIO_G3B	RSC1 JPICE2A1
11	CBL-MCIO-1245M5R		JMCIO_G3A	RSC1 JPCIE1A1
13	CBL-GNZ5-1307	AIOM x16 (AIOM 1)	JAIOM1	N/A
15	CBL-PWEX-1136YB-25	RSC1 power	JPWR4	JPWR1

+

2nd Riser Card (slot 7 or 7~8)

	Cable/Part	Description	MB Port	Riser Port
12	NA	PCIe x16 (Slot 7)	Slot1 PCIe 5.0 x16	RSC2 Gold finger
13	CBL-GNZ5-1307	AIOM x16 (AIOM 1)	JAIOM1	N/A

OR

	Cable/Part	Description	MB Port	Riser Port
12	NA	PCIe x8 (Slot 7 & 8)	Slot1 PCIe 5.0 x16	RSC2B Gold finger
13	CBL-GNZ5-1307	AIOM x16 (AIOM 1)	JAIOM1	N/A

From Riser slot 1 | From Riser slot 2 | From MCIO port | From AIOM slot | From MCIO Hybrid port for SATA | Power Cable/ i2C Cable | SAS AOC

24 SAS + 4 PCIe x16 or 8 PCIe x8

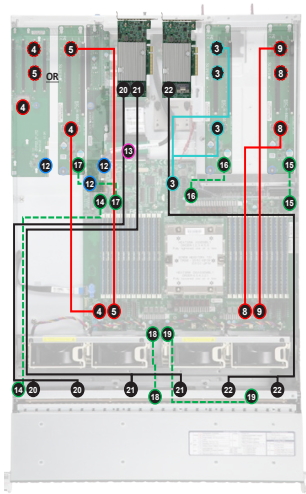

Front Storage Cables

	Cable	Description	MB Port	Backplane/Riser Port
14	CBL-CDAT-1062	i2C Cable	JRSI2C1	BP BMC I2C
18	CBL-PWEX-1142B-20	BP1 Power	JPWR5	JPWR1
19	CBL-PWEX-1142-40	BP2 Power	JPWR6	JPWR2
20	CBL-SAST-1264F-100	SAS 0-7	SAS AOC	SAS 0-3/4-7
21	CBL-SAST-1276F-100	SAS 8-15	SAS AOC	SAS 8-11/12-15
22	CBL-SAST-1296F-100	SAS 16-23	SAS AOC	SAS 16-19/20-23

Rear PCIe Slot Cables

1st Riser (slot 1 or 1+2) +

	Cable/Part	Description	MB Port	Riser Port
8	CBL-MCIO-1335M5R	PCIe x16 (Slot 1)	JMCIO_G2B	RSC1 JPCIE1B1
9	CBL-MCIO-1245M5R		JMCIO_G2A	RSC1 JPCIE1A1
13	CBL-GNZ5-1307	AIOM x16 (AIOM 1)	JAIOM1	N/A
15	CBL-PWEX-1136YB-25	RSC1 power	JPWR4	JPWR1

OR

	Cable/Part	Description	MB Port	Riser Port
8	CBL-MCIO-1245M5-Z	PCIe x8 (Slot 1 & 2)	JMCIO_G2B	RSC1 JPICE2A1
9	CBL-MCIO-1245M5R		JMCIO_G2A	RSC1 JPCIE1A1
13	CBL-GNZ5-1307	AIOM x16 (AIOM 1)	JAIOM1	N/A
15	CBL-PWEX-1136YB-25	RSC1 power	JPWR4	JPWR1

2nd Riser (slot 3 or 3+4) +

	Cable/Part	Description	MB Port	Riser Port
3	CBL-GNZ4-1227M5YRR16	PCIe x16 (Slot 3)	Slot2 PCIe 5.0 x16	RSC2 JPCIE1A1 and JPCIE1B1
13	CBL-GNZ5-1307	AIOM x16 (AIOM 1)	JAIOM1	N/A
16	CBL-PWEX-1136YB-25	RSC2 power	JPWR10	JPWR1

OR

	Cable/Part	Description	MB Port	Riser Port
3	CBL-GNZ4-1227M5YR21	PCIe x8 (Slot 3 & 4)	Slot2 PCIe 5.0 x16	RSC2 JPCIE1A1 and JPICE2A1
13	CBL-GNZ5-1307	AIOM x16 (AIOM 1)	JAIOM1	N/A
16	CBL-PWEX-1136YB-25	RSC2 power	JPWR10	JPWR1

3rd Riser (slot 5+7 or 5+7+8 or 5 ~ 8)

	Cable/Part	Description	MB Port	Riser Port
12	N/A	RSC3 + RSC4 2x PCIe x16 (Slot 5&7)	Slot1 PCIe 5.0 x16	RSC4 Gold Finger
4	CBL-MCIO-1335M5R		JMCIO_G0B	RSC3 JPCIE1B1
5	CBL-MCIO-1245M5R		JMCIO_G0A	RSC3 JPCIE1A1
17	CBL-PWEX-1136YB-25	RSC3 power	JPWR3	JPWR1
13	CBL-GNZ5-1307	AIOM x16 (AIOM 1)	JAIOM1	N/A

OR

	Cable/Part	Description	MB Port	Riser Port
12	N/A	RSC3B 1x PCIe x16 (Slot 5) + 2x PCIe x8 (Slot 7, 8)	Slot1 PCIe 5.0 x16	RSC3B Gold Finger
4	CBL-MCIO-1245M5-Z		JMCIO_G0B	RSC 3B JPICE2B1
5	CBL-MCIO-1245M5-Z		JMCIO_G0A	RSC3B JPICE2A1
13	CBL-GNZ5-1307	AIOM x16 (AIOM 1)	JAIOM1	N/A

OR

	Cable/Part	Description	MB Port	Riser Port
12	N/A	RSC3B 4x PCIe x8 (Slot 5~8)	Slot1 PCIe 5.0 x16	RSC3B Gold Finger
4	CBL-MCIO-1245M5-Z		JMCIO_G0B	RSC3B JPCIE1A1
5	CBL-MCIO-1245M5-Z		JMCIO_G0A	RSC3B JPICE2A1
13	CBL-GNZ5-1307	AIOM x16 (AIOM 1)	JAIOM1	N/A

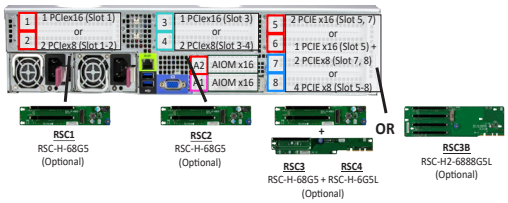

From Riser slot 1 | From Riser slot 2 | From MCIO port | From AIOM slot | From MCIO Hybrid port for SATA | Power Cable/ i2C Cable | SAS AOC

4 PCIe x16 or 8 PCIe x8

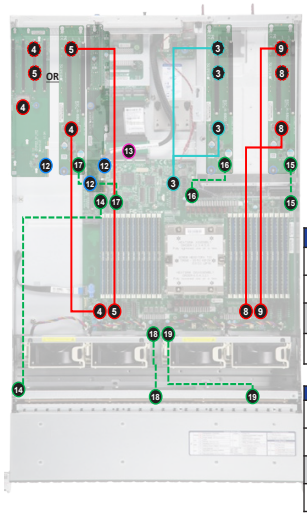

Front Storage Cables

	Cable/Part	Description	MB Port	Backplane/Riser Port
14	CBL-CDAT-1062	i2C Cable	JRSI2C1	BP BMC I2C
18	CBL-PWEX-1142B-20	BP1 Power	JPWR5	JPWR1
19	CBL-PWEX-1142-40	BP2 Power	JPWR6	JPWR2

Rear PCIe Slot Cables

1st Riser (slot 1 or 1+2)

	Cable/Part	Description	MB Port	Riser Port
8	CBL-MCIO-1335M5R	PCIe x16 (Slot 1)	JMCIO_G2B	RSC1 JPCIE1B1
9	CBL-MCIO-1245M5R		JMCIO_G2A	RSC1 JPCIE1A1
13	CBL-GNZ5-1307	AIOM x16 (AIOM 1)	JAIOM1	N/A
15	CBL-PWEX-1136YB-25	RSC1 power	JPWR4	JPWR1

OR

	Cable/Part	Description	MB Port	Riser Port
8	CBL-MCIO-1245M5-Z	PCIe x8 (Slot 1 & 2)	JMCIO_G2B	RSC1 JPICE2A1
9	CBL-MCIO-1245M5R		JMCIO_G2A	RSC1 JPCIE1A1
13	CBL-GNZ5-1307	AIOM x16 (AIOM 1)	JAIOM1	N/A
15	CBL-PWEX-1136YB-25	RSC1 power	JPWR4	JPWR1

+

2nd Riser (slot 3 or 3+4)

	Cable/Part	Description	MB Port	Riser Port
3	CBL-GNZ4-1227M5YRR16	PCIe x16 (Slot 3)	Slot2 PCIe 5.0 x16	RSC2 JPCIE1A1 and JPCIE1B1
13	CBL-GNZ5-1307	AIOM x16 (AIOM 1)	JAIOM1	N/A
16	CBL-PWEX-1136YB-25	RSC2 power	JPWR10	JPWR1

OR

	Cable/Part	Description	MB Port	Riser Port
3	CBL-GNZ4-1227M5YR21	PCIe x8 (Slot 3 & 4)	Slot2 PCIe 5.0 x16	RSC2 JPCIE1A1 and JPICE2A1
13	CBL-GNZ5-1307	AIOM x16 (AIOM 1)	JAIOM1	N/A
16	CBL-PWEX-1136YB-25	RSC2 power	JPWR10	JPWR1

+

3rd Riser (slot 5+7 or 5+7+8 or 5 ~ 8)

	Cable/Part	Description	MB Port	Riser Port
12	N/A	RSC3 + RSC4 2x PCIe x16 (Slot 5&7)	Slot1 PCIe 5.0 x16	RSC4 Gold Finger
4	CBL-MCIO-1335M5R		JMCIO_G0B	RSC3 JPCIE1B1
5	CBL-MCIO-1245M5R		JMCIO_G0A	RSC3 JPCIE1A1
17	CBL-PWEX-1136YB-25	RSC3 power	JPWR3	JPWR1
13	CBL-GNZ5-1307	AIOM x16 (AIOM 1)	JAIOM1	N/A

OR

	Cable/Part	Description	MB Port	Riser Port
12	N/A	RSC3B 1x PCIe x16 (Slot 5) + 2x PCIe x8 (Slot 7, 8)	Slot1 PCIe 5.0 x16	RSC3B Gold Finger
4	CBL-MCIO-1245M5-Z		JMCIO_G0B	RSC 3B JPICE2B1
5	CBL-MCIO-1245M5-Z		JMCIO_G0A	RSC3B JPICE2A1
13	CBL-GNZ5-1307	AIOM x16 (AIOM 1)	JAIOM1	N/A

OR

	Cable/Part	Description	MB Port	Riser Port
12	N/A	RSC3B 4x PCIe x8 (Slot 5~8)	Slot1 PCIe 5.0 x16	RSC3B Gold Finger
4	CBL-MCIO-1245M5-Z		JMCIO_G0B	RSC3B JPCIE1A1
5	CBL-MCIO-1245M5-Z		JMCIO_G0A	RSC3B JPICE2A1
13	CBL-GNZ5-1307	AIOM x16 (AIOM 1)	JAIOM1	N/A

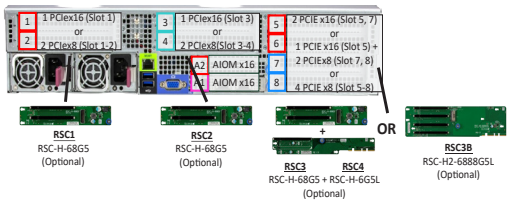

From Riser slot 1 | From Riser slot 2 | From MCIO port | From AIOM slot | From MCIO Hybrid port for SATA | Power Cable/ i2C Cable | SAS AOC

16 SAS + 4 PCIe x16 or 8 PCIe x8

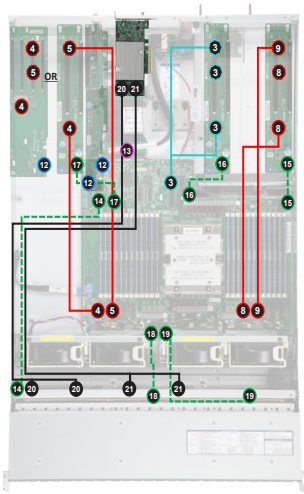

Front Storage Cables

	Cable	Description	MB Port	Backplane/Riser Port
14	CBL-CDAT-1062	i2C Cable	JRSI2C1	BP BMC I2C
18	CBL-PWEX-1142B-20	BP1 Power	JPWR5	JPWR1
19	CBL-PWEX-1142-40	BP2 Power	JPWR6	JPWR2
20	CBL-SAST-1264F-100	SAS 0-7	SAS AOC	SAS 0-3/4-7
21	CBL-SAST-1276F-100	SAS 8-15	SAS AOC	SAS 8-11/12-15

Rear PCIe Slot Cables

1st Riser (slot 1 or 1+2) +

	Cable/Part	Description	MB Port	Riser Port
8	CBL-MCIO-1335M5R	PCIe x16 (Slot 1)	JMCIO_G2B	RSC1 JPCIE1B1
9	CBL-MCIO-1245M5R		JMCIO_G2A	RSC1 JPCIE1A1
13	CBL-GNZ5-1307	AIOM x16 (AIOM 1)	JAIOM1	N/A
15	CBL-PWEX-1136YB-25	RSC1 power	JPWR4	JPWR1

OR

	Cable/Part	Description	MB Port	Riser Port
8	CBL-MCIO-1245M5-Z	PCIe x8 (Slot 1 & 2)	JMCIO_G2B	RSC1 JPICE2A1
9	CBL-MCIO-1245M5R		JMCIO_G2A	RSC1 JPCIE1A1
13	CBL-GNZ5-1307	AIOM x16 (AIOM 1)	JAIOM1	N/A
15	CBL-PWEX-1136YB-25	RSC1 power	JPWR4	JPWR1

2nd Riser (slot 3 or 3+4) +

	Cable/Part	Description	MB Port	Riser Port
3	CBL-GNZ4-1227M5YRR16	PCIe x16 (Slot 3)	Slot2 PCIe 5.0 x16	RSC2 JPCIE1A1 and JPCIE1B1
13	CBL-GNZ5-1307	AIOM x16 (AIOM 1)	JAIOM1	N/A
16	CBL-PWEX-1136YB-25	RSC2 power	JPWR10	JPWR1

OR

	Cable/Part	Description	MB Port	Riser Port
3	CBL-GNZ4-1227M5YR21	PCIe x8 (Slot 3 & 4)	Slot2 PCIe 5.0 x16	RSC2 JPCIE1A1 and JPICE2A1
13	CBL-GNZ5-1307	AIOM x16 (AIOM 1)	JAIOM1	N/A
16	CBL-PWEX-1136YB-25	RSC2 power	JPWR10	JPWR1

3rd Riser (slot 5+7 or 5+7+8 or 5 ~ 8)

	Cable/Part	Description	MB Port	Riser Port
12	N/A	RSC3 + RSC4 2x PCIe x16 (Slot 5&7)	Slot1 PCIe 5.0 x16	RSC4 Gold Finger
4	CBL-MCIO-1335M5R		JMCIO_G0B	RSC3 JPCIE1B1
5	CBL-MCIO-1245M5R		JMCIO_G0A	RSC3 JPCIE1A1
17	CBL-PWEX-1136YB-25	RSC3 power	JPWR3	JPWR1
13	CBL-GNZ5-1307	AIOM x16 (AIOM 1)	JAIOM1	N/A

OR

	Cable/Part	Description	MB Port	Riser Port
12	N/A	RSC3B 1x PCIe x16 (Slot 5) + 2x PCIe x8 (Slot 7, 8)	Slot1 PCIe 5.0 x16	RSC3B Gold Finger
4	CBL-MCIO-1245M5-Z		JMCIO_G0B	RSC 3B JPICE2B1
5	CBL-MCIO-1245M5-Z		JMCIO_G0A	RSC3B JPICE2A1
13	CBL-GNZ5-1307	AIOM x16 (AIOM 1)	JAIOM1	N/A

OR

	Cable/Part	Description	MB Port	Riser Port
12	N/A	RSC3B 4x PCIe x8 (Slot 5~8)	Slot1 PCIe 5.0 x16	RSC3B Gold Finger
4	CBL-MCIO-1245M5-Z		JMCIO_G0B	RSC3B JPCIE1A1
5	CBL-MCIO-1245M5-Z		JMCIO_G0A	RSC3B JPICE2A1
13	CBL-GNZ5-1307	AIOM x16 (AIOM 1)	JAIOM1	N/A

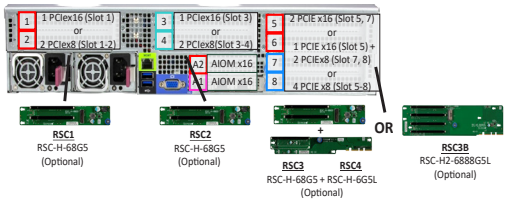

From Riser slot 1 | From Riser slot 2 | From MCIO port | From AIOM slot | From MCIO Hybrid port for SATA | Power Cable/ i2C Cable | SAS AOC

20 NVMe + 2PCIe x16 or 4 PCIe x8

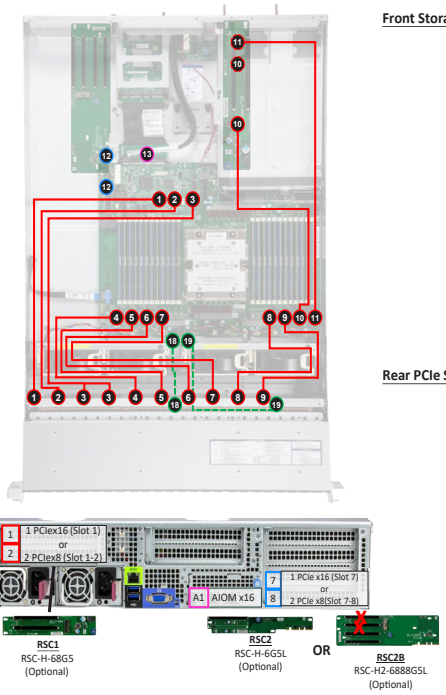

Front Storage Cables

	Cable	Description	MB Port	Backplane/Riser Port
1	CBL-MCIO-1250M5-Z	NVMe 0-1	JMCIO_P0A	BP NVMe0/1
2	CBL-MCIO-1255M5	NVMe 2-3	JMCIO_P0B	BP NVMe2/3
3	CBL-GNZ4-1265M5Y-X	NVMe 4-7	Slot2 PCIe 5.0 x16	BP NVMe4/5 – 6/7
4	CBL-MCIO-1340M5R	NVMe 8-9	JMCIO_G0B	BP NVMe8/9
5	CBL-MCIO-1245M5-Z	NVMe 10-11	JMCIO_G0A	BP NVMe10/11
6	CBL-MCIO-1250M5-Z	NVMe 12-13	JMCIO_G1B	BP NVMe12/13
7	CBL-MCIO-1260M5	NVMe 14-15	JMCIO_G1A	BP NVMe14/15
8	CBL-MCIO-1330M5	NVMe 16-17	JMCIO_G2B	BP NVMe16/17
9	CBL-MCIO-1326M5	NVMe 18-19	JMCIO_G2A	BP NVMe18/19
18	CBL-PWEX-1142B-20	BP1 Power	JPWR5	JPWR1
19	CBL-PWEX-1142-40	BP2 Power	JPWR6	JPWR2
20	CBL-SAST-1296F-100	SAS 20-23	SAS AOC	SAS 20-23

Rear PCIe Slot Cables

1st Riser (slot 1 or 1+2)

	Cable/Part	Description	MB Port	Riser Port
10	CBL-MCIO-1335M5R	PCIe x16 (Slot 1)	JMCIO_G3B	RSC1 JPCIE1B1
11	CBL-MCIO-1245M5R		JMCIO_G3A	RSC1 JPCIE1A1
13	CBL-GNZ5-1307	AIOM x16 (AIOM 1)	JAIOM1	N/A
15	CBL-PWEX-1136YB-25	RSC1 power	JPWR4	JPWR1

OR

	Cable/Part	Description	MB Port	Riser Port
10	CBL-MCIO-1245M5-Z	PCIe x8 (Slot 1 & 2)	JMCIO_G3B	RSC1 JPICE2A1
11	CBL-MCIO-1245M5R		JMCIO_G3A	RSC1 JPCIE1A1
13	CBL-GNZ5-1307	AIOM x16 (AIOM 1)	JAIOM1	N/A
15	CBL-PWEX-1136YB-25	RSC1 power	JPWR4	JPWR1

+

2nd Riser Card (slot 7 or 7~8)

	Cable/Part	Description	MB Port	Riser Port
12	NA	PCIe x16 (Slot 7)	Slot1 PCIe 5.0 x16	RSC2 Gold finger
13	CBL-GNZ5-1307	AIOM x16 (AIOM 1)	JAIOM1	N/A

OR

	Cable/Part	Description	MB Port	Riser Port
12	NA	PCIe x8 (Slot 7 & 8)	Slot1 PCIe 5.0 x16	RSC2B Gold finger
13	CBL-GNZ5-1307	AIOM x16 (AIOM 1)	JAIOM1	N/A

From Riser slot 1 | From Riser slot 2 | From MCIO port | From AIOM slot | From MCIO Hybrid port for SATA | Power Cable/ i2C Cable | SAS AOC

16 SATA + 4 PCIe x16 or 8 PCIe x8

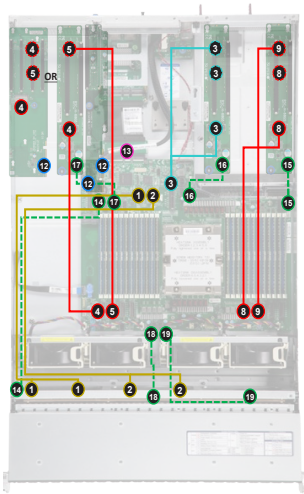

Front Storage Cables

	Cable	Description	MB Port	Backplane/Riser Port
1	CBL-MCIO-1255S4Y	SATA 0-7	JMCIO_P0A	BP SAS 0-3/ 4-7
2	CBL-MCIO-1275S4Y	SATA 8-15	JMCIO_P0B	BP SAS 8-11/ 12-15
14	CBL-CDAT-1062	i2C Cable	JRSI2C1	BP BMC I2C
18	CBL-PWEX-1142B-20	BP1 Power	JPWR5	JPWR1
19	CBL-PWEX-1142-40	BP2 Power	JPWR6	JPWR2

Rear PCIe Slot Cables

1st Riser (slot 1 or 1+2)

	Cable/Part	Description	MB Port	Riser Port
8	CBL-MCIO-1335M5R	PCIe x16 (Slot 1)	JMCIO_G2B	RSC1 JPCIE1B1
9	CBL-MCIO-1245M5R		JMCIO_G2A	RSC1 JPCIE1A1
13	CBL-GNZ5-1307	AIOM x16 (AIOM 1)	JAIOM1	N/A
15	CBL-PWEX-1136YB-25	RSC1 power	JPWR4	JPWR1

OR

	Cable/Part	Description	MB Port	Riser Port
8	CBL-MCIO-1245M5-Z	PCIe x8 (Slot 1 & 2)	JMCIO_G2B	RSC1 JPICE2A1
9	CBL-MCIO-1245M5R		JMCIO_G2A	RSC1 JPCIE1A1
13	CBL-GNZ5-1307	AIOM x16 (AIOM 1)	JAIOM1	N/A
15	CBL-PWEX-1136YB-25	RSC1 power	JPWR4	JPWR1

+

2nd Riser (slot 3 or 3+4)

	Cable/Part	Description	MB Port	Riser Port
3	CBL-GNZ4-1227M5YRR16	PCIe x16 (Slot 3)	Slot2 PCIe 5.0 x16	RSC2 JPCIE1A1 and JPCIE1B1
13	CBL-GNZ5-1307	AIOM x16 (AIOM 1)	JAIOM1	N/A
16	CBL-PWEX-1136YB-25	RSC2 power	JPWR10	JPWR1

OR

	Cable/Part	Description	MB Port	Riser Port
3	CBL-GNZ4-1227M5YR21	PCIe x8 (Slot 3 & 4)	Slot2 PCIe 5.0 x16	RSC2 JPCIE1A1 and JPICE2A1
13	CBL-GNZ5-1307	AIOM x16 (AIOM 1)	JAIOM1	N/A
16	CBL-PWEX-1136YB-25	RSC2 power	JPWR10	JPWR1

+

3rd Riser (slot 5+7 or 5+7+8 or 5 ~ 8)

	Cable/Part	Description	MB Port	Riser Port
12	N/A	RSC3 + RSC4 2x PCIe x16 (Slot 5&7)	Slot1 PCIe 5.0 x16	RSC4 Gold Finger
4	CBL-MCIO-1335M5R		JMCIO_G0B	RSC3 JPCIE1B1
5	CBL-MCIO-1245M5R		JMCIO_G0A	RSC3 JPCIE1A1
17	CBL-PWEX-1136YB-25	RSC3 power	JPWR3	JPWR1
13	CBL-GNZ5-1307	AIOM x16 (AIOM 1)	JAIOM1	N/A

OR

	Cable/Part	Description	MB Port	Riser Port
12	N/A	RSC3B 1x PCIe x16 (Slot 5) + 2x PCIe x8 (Slot 7, 8)	Slot1 PCIe 5.0 x16	RSC3B Gold Finger
4	CBL-MCIO-1245M5-Z		JMCIO_G0B	RSC 3B JPICE2B1
5	CBL-MCIO-1245M5-Z		JMCIO_G0A	RSC3B JPICE2A1
13	CBL-GNZ5-1307	AIOM x16 (AIOM 1)	JAIOM1	N/A

OR

	Cable/Part	Description	MB Port	Riser Port
12	N/A	RSC3B 4x PCIe x8 (Slot 5~8)	Slot1 PCIe 5.0 x16	RSC3B Gold Finger
4	CBL-MCIO-1245M5-Z		JMCIO_G0B	RSC3B JPCIE1A1
5	CBL-MCIO-1245M5-Z		JMCIO_G0A	RSC3B JPICE2A1
13	CBL-GNZ5-1307	AIOM x16 (AIOM 1)	JAIOM1	N/A

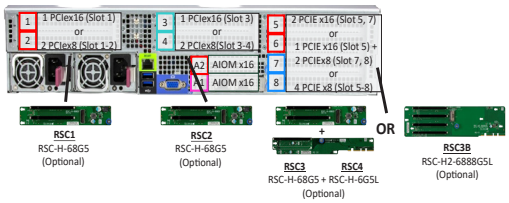

From Riser slot 1 | From Riser slot 2 | From MCIO port | From AIOM slot | From MCIO Hybrid port for SATA | Power Cable/ i2C Cable | SAS AOC

Chapter 4

Motherboard Connections

This section describes the connections on the motherboard and provides pinout definitions. Note that depending on how the system is configured, not all connections are required. The LEDs on the motherboard are also described here. A motherboard layout indicating component locations may be found in Chapter 1. More detail can be found in the Motherboard Manual Please review the Safety Precautions in Appendix A before installing or removing components.

4.1 Power Connections

12 V 8-pin Auxiliary Power Connector (JPWR1-11)

JPWR1-11 is an 8-pin Micro-Hi power input to provide power to GPU. Refer to the table below for pin definitions.

12 V 8-pin Power Connector Pin Definitions			
Pin#	**Definition**	**Pin#**	**Definition**
1	Ground	5	+12 V
2	Ground	6	+12 V
3	Ground	7	+12 V
4	Ground	8	+12V

4.2 Headers and Connectors

NC-SI Connector

A Network-Controller Sideband Interface (NC-SI) header is located at JNCSI1 on the motherboard. The NCSI header is used to connect a Network Interface Card (NIC) to the motherboard so that the BMC is able to poll the temperature reading from it.

TPM/Port 80 Header

A Trusted Platform Module (TPM)/Port 80 header is located at JTPM1 to provide TPM support and Port 80 connection. Use this header to enhance system performance and data security. Refer to the table below for pin definitions. Please go to the following link for more information on the TPM: http://www.supermicro.com/manuals/other/TPM.pdf.

Trusted Platform Module Header Pin Definitions			
Pin#	**Definition**	**Pin#**	**Definition**
1	+3.3 V	2	SPI_CS#
3	RESET#	4	SPI_MISO
5	SPI_CLK	6	GND
7	SPI_MOSI	8	NC
9	3.3 V Stby	10	SPI_IRQ#

Expansion Slots

The motherboard features two expansion slots (JSXB0 and JSXB1). These are both PCIe 5.0 x16 slots (JSXB0 is for a left-hand riser card and JSXB1 is for a right-hand riser card).

AIOM Slot

An Advanced I/O Module (AIOM) slot supports a networking adapter card with multiple RJ45 ports. This slot also supports NC-SI.

4.3 Input/Output Ports

I/O Ports

The low-profile slimSAS I/O connector, located at JIO1, is used to connect the motherboard to an I/O mezzanine board, AOM-HS119-IO, to provide VGA/COM/BMC/USB connections.

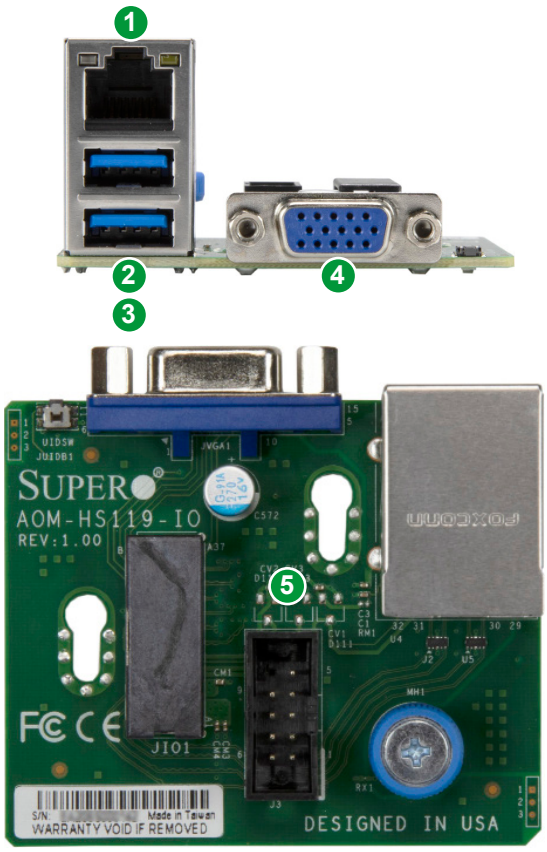

I/O Ports from AOM-HS119-IO	
#	**Description**
1	BMC_LAN Port
2	USB 0 (3.2 Gen 1)
3	USB 1 (3.2 Gen 1)
4	VGA Port
5	COM Port Header

VGA Connection

A VGA header is located at JFP2 on the motherboard.

4.4 LED Indicators

BMC LAN Port LEDs

A dedicated BMC LAN is located on the rear I/O panel and has two LED indicators. The LED on the right indicates connection and activity, while the LED on the left indicates the speed of connection. The Link LED may amber, green, or off to indicate the speed of the connection. Refer to the tables below for more information.

Link LED, Connection Link Speed Indicator	
LED Color	**Definition**
Amber	1 Gb/s
Green	100 Mb/s
Off	10 Mb/s

Activity LED		
Color	**State**	**Definition**
None	No Connection	
Yellow	Solid On	Link
Yellow	Flashing	Active

UID LED Indicator (LED4)

The rear LED8 is located next to the UID switch. The front UID LED is located on the front panel. When you press the UID switch, both rear LED8 and front UID LED indicators will turn on. Press the UID switch again to turn off the LED indicators. Use this UID Indicator to 'mark' the system, so the system can be easily identified whether on the front or back (e.g., a system rack with multiple units installed).

UID LED Indicator		
Color	**State**	**Definition**
None	Off	UID Off
Blue	Solid On	Unit Identified by Local Site
Blue	Slow Blinking	Unit Identified by Remote Site
Blue	Slow Blinking	System Recovery

BMC Heartbeat LED (LED1)

A BMC Heartbeat LED is located at LED1 on the motherboard. When LED1 is blinking, the BMC is functioning normally. See the table below for more information.

BMC Heartbeat LED State		
Color	**State**	**Definition**
Green	Solid On	BMC is not ready
Green	Blinking	BMC Normal
Green	Fast Blinking	BMC: Initializing

Chapter 5

Software

After the hardware has been installed, you can install the Operating System (OS), configure RAID settings, and install the drivers.

5.1 Microsoft Windows OS Installation

If you will be using RAID, you must configure RAID settings before installing the Windows OS and the RAID driver. Refer to the RAID Configuration User Guides posted on our website at www.supermicro.com/support/manuals.

Installing the OS

1. Create a method to access the Microsoft Windows installation ISO file. That might be a Media drive, perheps using an external USB/SATA media drive, a USB flash drive, or the BMC KVM console.

2. Retrieve the proper drivers. Go to the Supermicro web page for your motherboard and click on "Download the Latest Drivers and Utilities", select the proper driver, and copy it to a USB flash drive.

3. Boot from a bootable device with Windows OS installation. You can see a bootable device list by pressing **F11** during the system bootup.

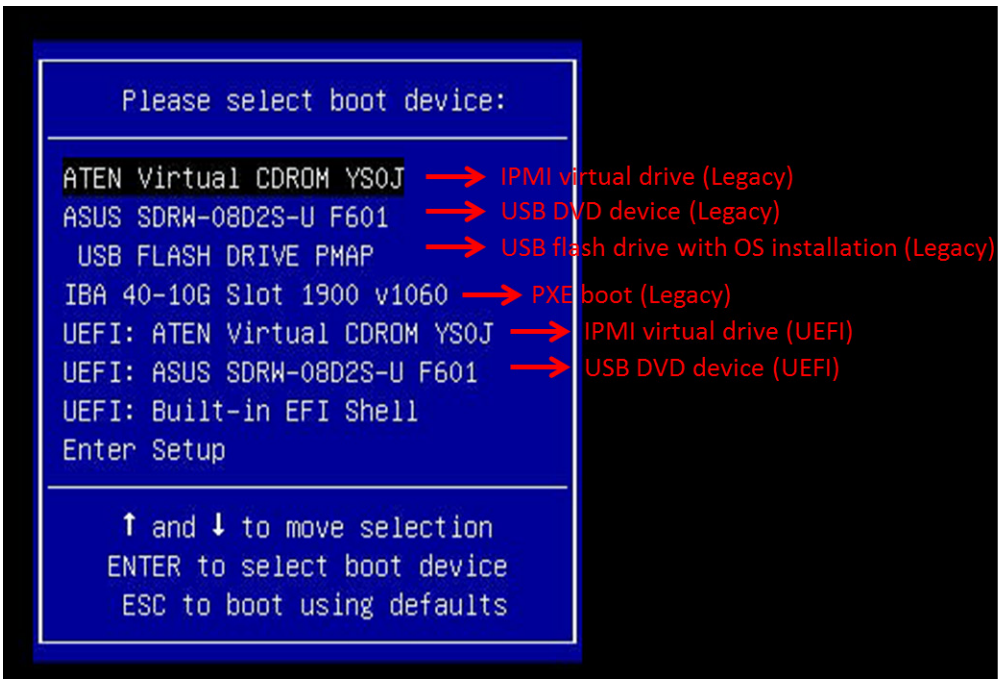

Figure 5-1. Select Boot Device

4. During Windows Setup, continue to the dialog box where you select the drives on which to install Windows. If the disk you want to use is not listed, click on “Load driver” link at the bottom left corner.

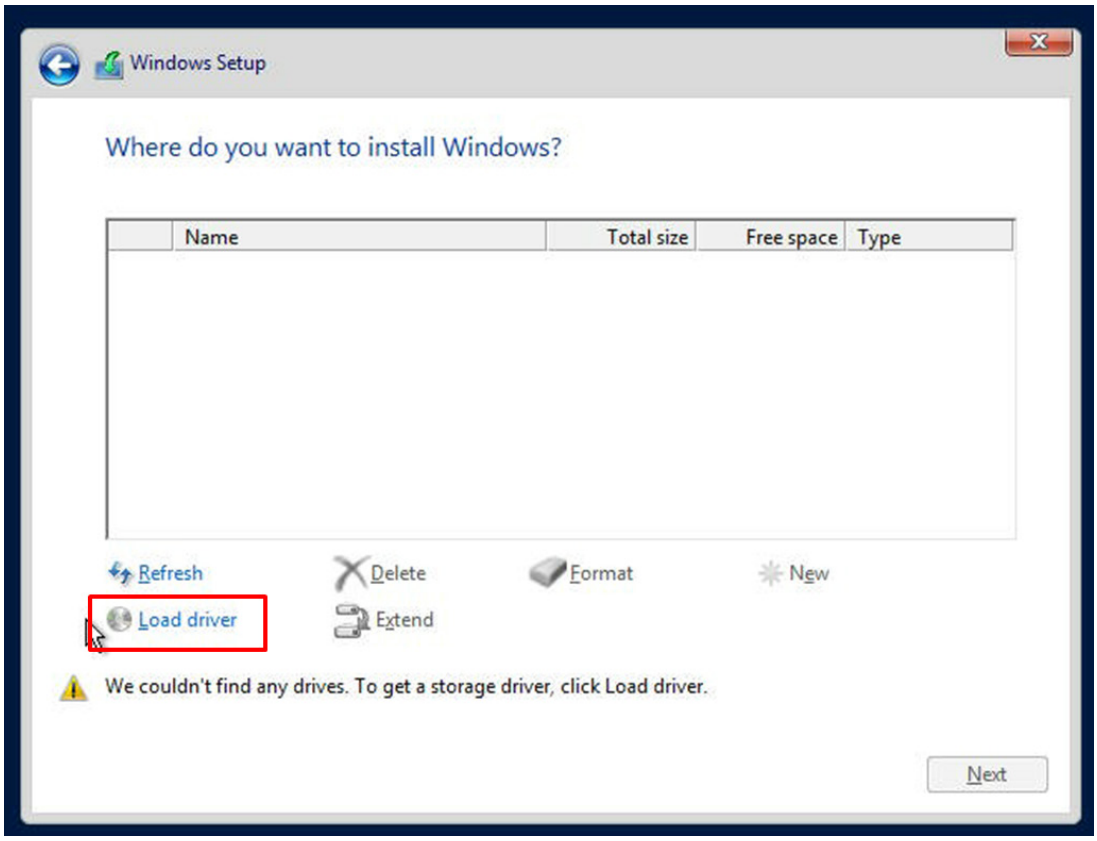

Figure 5-2. Load Driver Link

To load the driver, browse the USB flash drive for the proper driver files.

- Choose the SATA/sSATA AHCI driver indicated and then choose the storage drive on which you want to install it.

5. Once all devices are specified, continue with the installation.

6. After the Windows OS installation has completed, the system will automatically reboot multiple times for system updates.

5.2 Driver Installation

The Supermicro website contains drivers and utilities for your system at https://www.supermicro.com/wdl/driver. Some of these must be installed, such as the chipset driver. After accessing the website, go into the CDR_Images (in the parent directory of the above link) and locate the ISO file for your motherboard. Download this file to a USB flash or a media drive. (You may also use a utility to extract the ISO file if preferred.)

Another option is to go to the Supermicro website at http://www.supermicro.com/products/. Find the product page for your motherboard, and "Download the Latest Drivers and Utilities". Insert the flash drive or disk, and the screenshot shown below should appear.

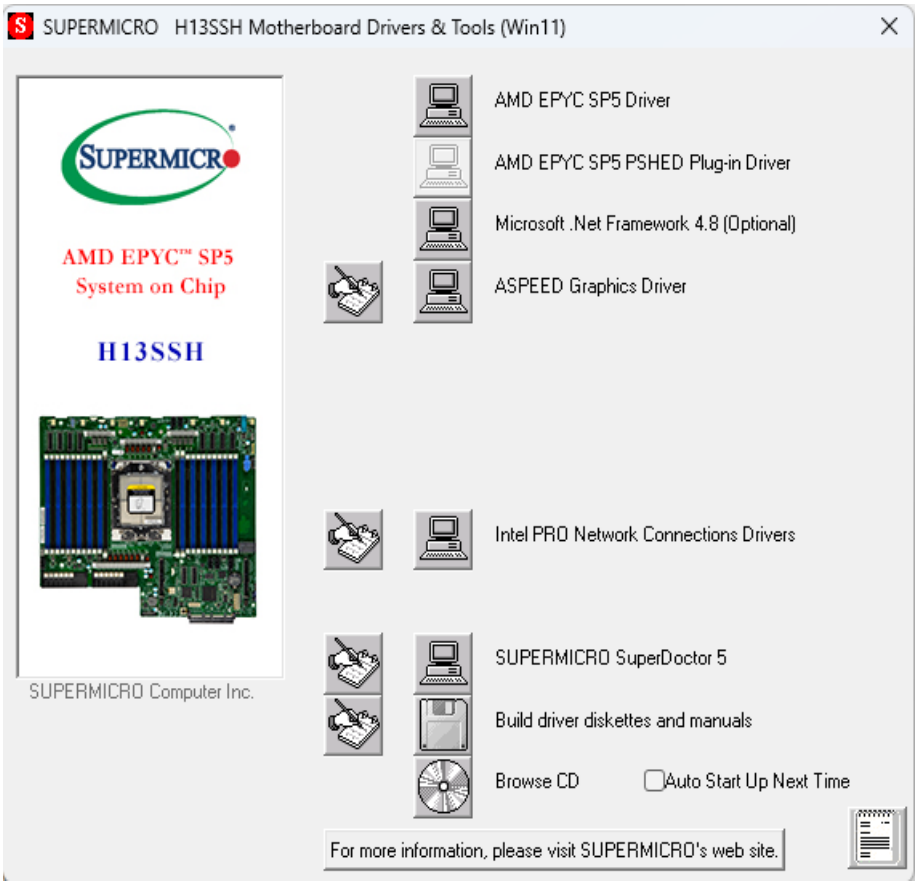

Figure 5-3. Driver and Tool Installation Screen

Note: Click the icons showing handwriting on paper to view the readme files for each item. Click the computer icons to the right of these items to install each item (from top to the bottom) one at a time. **After installing each item, you must reboot the system before moving on to the next item on the list.** The bottom icon with a CD on it allows you to view the entire contents.

5.3 SuperDoctor® 5

The Supermicro SuperDoctor 5 is a program that functions in a command-line or web-based interface for Windows and Linux operating systems. The program monitors such system health information as CPU temperature, system voltages, system power consumption, fan speed, and provides alerts via email or Simple Network Management Protocol (SNMP).

SuperDoctor 5 comes in local and remote management versions and can be used with Nagios to maximize your system monitoring needs. With SuperDoctor 5 Management Server (SSM Server), you can remotely control power on/off and reset chassis intrusion for multiple systems with SuperDoctor 5 or IPMI. SuperDoctor 5 Management Server monitors HTTP, FTP, and SMTP services to optimize the efficiency of your operation.

SuperDoctor® Manual and Resources

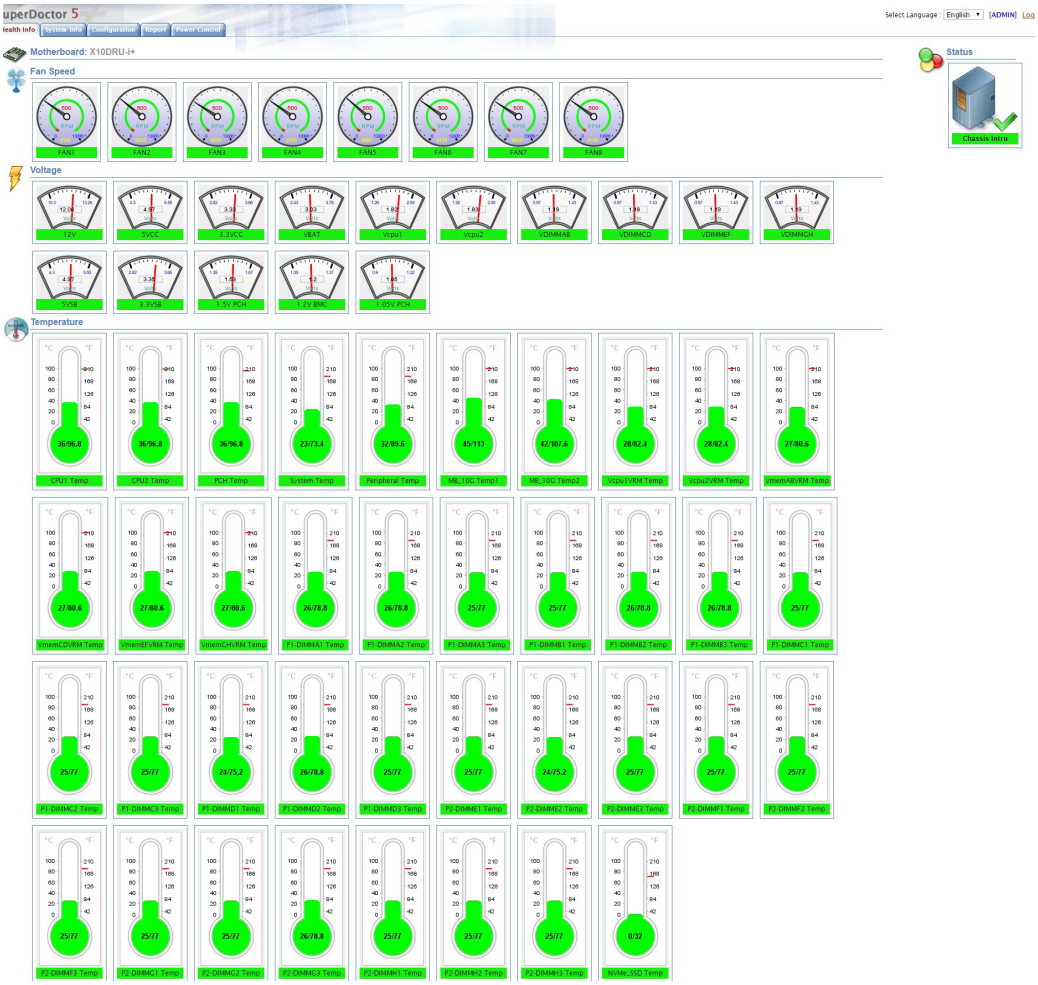

Figure 5-4. SuperDoctor 5 Interface Display Screen (Health Information)

5.4 IPMI

The H13SSH supports the Intelligent Platform Management Interface (IPMI). IPMI is used to provide remote access, monitoring and management. There are several BIOS settings that are related to IPMI.

Supermicro ships standard products with a unique password for the BMC ADMIN user. This password can be found on a label on the motherboard.

For general documentation and information on IPMI, please visit our website at: http://www.supermicro.com/products/nfo/IPMI.cfm.

Chapter 6

Optional Components

This chapter describes alternate configurations and optional system components.

Optional Parts
Storage Protocals
PCIe Options
Power Options
Cable Management Arm
TPM security module

6.1 Storage Protocols Supported

The storage drive bays can be configured to support either SATA, SAS, or NVMe drives by adding optional parts to the system.

SATA – The system supports up to twenty-four SATA drives from on-board connector. Additional cables are required.

SAS – The system can support up to eight, sixteen, or twenty-four SAS drives with supported addon storage controller card(s).

NVMe – The system supports twenty-four NVMe drives from on-board connector. Additional cables are required.

6.2 Storage Control Cards

Storage Control Card Options	
AOC SKU	**Description**
AOC-S3908L-H8iR-16DD	SAS RAID Adapter (RAID 0, 1, 5, 6, 10, 50, 60), eight internal SAS3 ports, Supports up to 16 physical devices with expander, One SlimSAS and eight black (100-Ohm) connector
AOC-S3916L-H16iR-32DD	SAS RAID Adapter (RAID 0, 1, 5, 6, 10, 50, 60), 16 internal SAS3 ports, Supports up to 32 physical devices with expander, Two SlimSAS eight black (100-Ohm) connectors
AOC-S3808L-L8iT	SAS Host Bus Adapter (IT mode), eight internal SAS3 ports, Supports up to 122 physical devices with expander, One SlimSAS and eight black (100-Ohm) connectors
AOC-S3816L-L16iT	SAS Host Bus Adapter (IT mode), 16 internal SAS3 ports, Supports up to 122 physical devices with expander, Two SlimSAS and eight black (100-Ohm) connectors

6.3 PCIe Options

AS -2115HS-TNR Drive Bay Configuration Options

Option 1: 24 NVMe		
Drive Bay #	**Drive Type**	**Part Numbers**
Drive Bays 0-23	NVMe	CBL-MCIO-1250M5-Z (x2) CBL-MCIO-1255M5 CBL-GNZ4-1265M5Y-X CBL-MCIO-1340M5R CBL-MCIO-1245M5-Z CBL-MCIO-1260M5 CBL-MCIO-1330M5 CBL-MCIO-1326M5 CBL-MCIO-1221M5 CBL-MCIO-1218M5-1

Option 2: 24 SATA		
Drive Bay #	**Drive Type**	**Part Numbers**
Drive Bays 0-23	SATA	CBL-MCIO-1255S4Y CBL-MCIO-1275S4Y CBL-MCIO-1223S4Y CBL-CDAT-1062

Option 3: 20 NVMe + 4 SAS		
Drive Bay #	**Drive Type**	**Part Numbers**
Drive Bays 0-19	NVME	CBL-MCIO-1250M5-Z (x2) CBL-MCIO-1255M5 CBL-GNZ4-1265M5Y-X CBL-MCIO-1340M5R CBL-MCIO-1245M5-Z CBL-MCIO-1260M5 CBL-MCIO-1330M5 CBL-MCIO-1326M5
Drive Bays 20-23	SAS	CBL-SAST-1296F-100 SAS AOC (3916/3816, etc)

Option 4: 24 SAS		
Drive Bay #	**Drive Type**	**Part Numbers**
Drive Bays 0-23	SAS	CBL-SAST-1264F-100 CBL-SAST-1276F-100 CBL-SAST-1296F-100 CBL-CDAT-1062 SAS AOC (3916/3816, etc)

Option 5: No Drive Tray Available		
Drive Bay #	**Drive Type**	**Part Numbers**
Drive Bays 0-23	Not Available	CBL-CDAT-1062 MCP-220-21602-0B (x3)

Option 6: 16 SAS		
Drive Bay #	**Drive Type**	**Part Numbers**
Drive Bays 0-23	SAS	CBL-SAST-1264F-100 CBL-SAST-1276F-100 CBL-CDAT-1062 SAS AOC (3916/3816, etc) MCP-220-00185-0N

Option 7: 20 NVMe		
Drive Bay #	**Drive Type**	**Part Numbers**
Drive Bays 0-19	NVMe	CBL-MCIO-1250M5-Z (x2) CBL-MCIO-1255M5 CBL-GNZ4-1265M5Y-X CBL-MCIO-1340M5R CBL-MCIO-1245M5-Z CBL-MCIO-1260M5 CBL-MCIO-1330M5 CBL-MCIO-1326M5 MCP-220-00185-0N (x2)

Option 8: 16 SATA		
Drive Bay #	**Drive Type**	**Part Numbers**
Drive Bays 0-15	SATA	CBL-MCIO-1255S4Y CBL-MCIO-1275S4Y CBL-CDAT-1062 MCP-220-00185-0N

AS -2115HS-TNR PCIe Slot Configuration Options

Slots 1-2 Configuration Options

Default: No PCIe Slots		
Slot #	**Slot Config**	**Part Numbers**
Slot 1	Not Available	MCP-120-21101-0N (Included with system)
Slot 2	Not Available	

Option 1: 1 PCIe x16 Slot		
Slot #	**Slot Config**	**Part Numbers**
Slot 1	PCIe 5.0 x16	MCP-240-21108-0N RSC-H-68G5 CBL-PWEX-1136YB-25 CBL-MCIO-1245M5R CBL-MCIO-1335M5R LBL-4000
Slot 2	Not avilable	

Option 2: 2 PCIe x8 Slots		
Slot #	**Slot Config**	**Part Numbers**
Slot 1	PCIe 5.0 x8	MCP-240-21108-0N RSC-H-68G5 CBL-PWEX-1136YB-25 CBL-MCIO-1245M5R CBL-MCIO-1245M5-Z
Slot 2	PCIe 5.0 x8	

Note: Slots 1-2 are not available for 24 NVMe drive bay configurations.

Slots 3-4 Configuration Options

Default: No PCIe Slots		
Slot #	**Slot Config**	**Part Numbers**
Slot 3	Not Available	MCP-120-21101-0N (Included with system)
Slot 4	Not Available	

Option 1: 1 PCIe x16 Slot		
Slot #	**Slot Config**	**Part Numbers**
Slot 3	PCIe 5.0 x16	MCP-240-21108-0N MCP-120-82927-0N RSC-H-68G5 CBL-PWEX-1136YB-25 LBL-4000 CBL-GNZ4-1227M5YRR16
Slot 4	Not Available	

Option 2: 2 PCIe x8 Slot		
Slot #	**Slot Config**	**Part Numbers**
Slot 3	PCIe 5.0 x8	MCP-240-21108-0N MCP-120-82927-0N RSC-H-68G5 CBL-PWEX-1136YB-25 CBL-GNZ4-1227M5YR21
Slot 4	PCIe 5.0 x8	

Note: Slots 3 and 4 are not available for 24 NVMe drive bay configuration, 20 NVMe + 4 SAS drive bay configuration, or 20 NVMe drive bay configuration.

Slots 5-8 Configuration Options

Default: No PCIe Slots		
Slot #	**Slot Config**	**Part Numbers**
Slot 5	Not Available	MCP-120-21902-0N (Included with system)
Slot 6	Not Available	
Slot 7	Not Available	
Slot 8	Not Available	

Option 1: 2 PCIe x16 Slots		
Slot #	**Slot Config**	**Part Numbers**
Slot 5	PCIe 5.0 x8 (CPU1)	MCP-240-21908-0N RSC-H2-6888G5L CBL-MCIO-1222AM5 (x2)
Slot 6	PCIe 5.0 x8 (CPU1)	
Slot 7	PCIe 5.0 x8 (CPU1)	
Slot 8	PCIe 5.0 x8 (CPU1)	

Option 2: 1 PCIe x16 Slot & 2 PCIe x8 Slots		
Slot #	**Slot Config**	**Part Numbers**
Slot 5	PCIe 5.0 x16	MCP-240-21908-0N RSC-H2-6888G5L CBL-MCIO-1245M5-Z (x2) LBL-4000
Slot 6	Not Available	
Slot 7	PCIe 5.0 x8	
Slot 8	PCIe 5.0 x8	

Option 3: 4 PCIe x8 Slot		
Slot #	**Slot Config**	**Part Numbers**
Slot 5	PCIe 5.0 x8	MCP-240-21908-0N RSC-H2-6888G5L CBL-MCIO-1245M5-Z (x2)
Slot 6	PCIe 5.0 x8	
Slot 7	PCIe 5.0 x8	
Slot 8	PCIe 5.0 x8	

Note: Slots 5 and 6 are not available for 24 NVMe drive bay configuration, 20 NVMe + 4 SAS drive bay configuration, or 20 NVMe drive bay configuration.

6.4 Power Supply Configurations

Power Supply Module Options		
Watts	**Part Number**	**80Plus Level**
1200	PWS-1K24A-1R	Titanium
1600	PWS-1K63A-1R (Default in AS -2115HS-TNR)	Titanium
2000	PWS-2K07A-1R	Titanium
2600	PWS-2K63A-1R	Titanium

6.5 Cable Management Arm

The system supports a cable management arm (CMA), which keeps the rear cables organized and clear of the rail mechanisms when the system is extended out the front of the rack for maintenance.

The CMA attaches to the rack mounting rails using four connectors. They are labeled on the connectors 1, 2, 3, and 4.

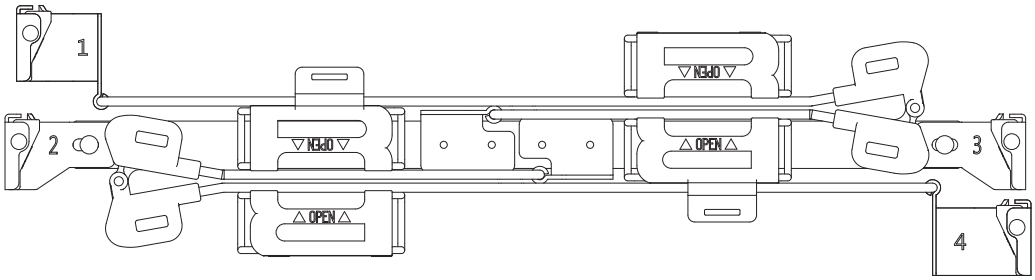

Figure 6-1. Cable Management Arm

Cable Arm Details		
Optional Part	**Part Number**	**Description**
Cable Arm	MCP-290-00168-0N	7.5" deep cable arm
Rail Set	MCP-290-11901-0N	41.2" rails (optimized for 1200 mm deep racks)

Installing the Cable Management Arm

1. Slide CMA connector #1 forward onto the two posts on the rear of the right inner rail (right side when viewed from the front). It snaps into place.

2. Slide CMA connector #2 forward onto the two posts on the rear of the right middle rail. It snaps into place.

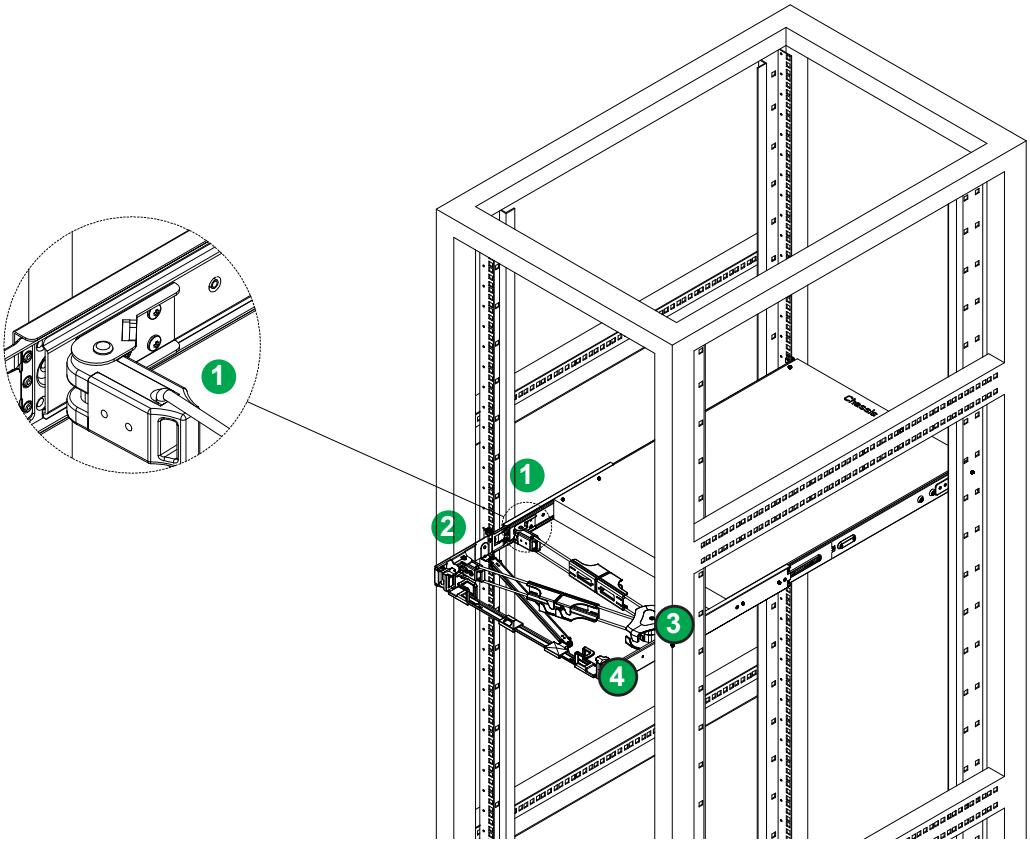

Figure 6-2. Installing the Connectors

3. Slide CMA connector #3 forward onto the two posts on the rear of the left middle rail. It snaps into place.

4. For CMA connector #4, align the metal tabs with the slots on the rear of the left outer rail and push it forward. It snaps into place.

5. Route the cables through the holding brackets, leaving enough slack.

Removing the Cable Management Arm

1. Remove cables from the CMA,

2. For CMA connector #4, pull the metal release tab toward the center of the rack and slide the connector toward the rear to release it.

3. For CMA connectors #3, #2, and #1, depress the front edge of the yellow plastic rocker lock and slide the connector toward the rear to release it.

6.6 TPM Security Module

SPI capable TPM 2.0 (or 1.2) with Infineon 9670 controller, vertical form factor.

The JTPM1 header is used to connect a Trusted Platform Module (TPM). A TPM is a security device that supports encryption and authentication in hard drives. It enables the motherboard to deny access if the TPM associated with the hard drive is not installed in the system.

Details and installation procedures are at:

http://www.supermicro.com/manuals/other/TPM.pdf.

- AOM-TPM-9670V

Chapter 7

Troubleshooting and Support

7.1 Information Resources

Website

A great deal of information is available on the Supermicro website.

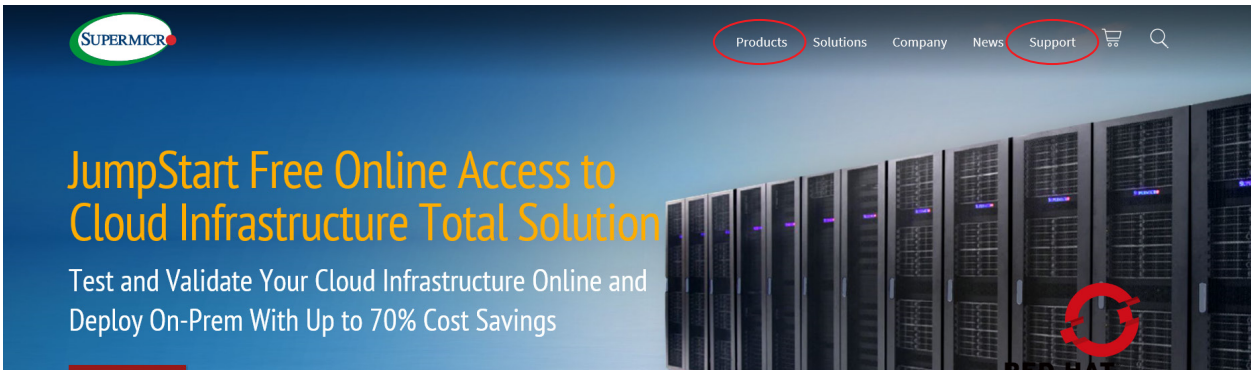

Figure 7-1. Supermicro Website

- Specifications for servers and other hardware are available by clicking Products.
- The **Support** option offers downloads (manuals, BIOS/BMC, drivers, etc.), FAQs, RMA, warranty, and other service extensions.

Direct Links for the AS -2115HS-TNR System

AS -2115HS-TNR specifications page

H13SSH motherboard page for links to the Quick Reference Guide, User Manual, validated storage drives, etc.

Direct Links for General Support and Information

Frequently Asked Questions

TPM User Guide

BMC User Guide

SuperDoctor5 Large Deployment Guide

Direct Links (continued)

Product Matrices page for links to tables summarizing specs for systems, motherboards, power supplies, riser cards, add-on cards, etc.

Security Center for recent security notices

Supermicro Phone and Addresses

7.2 Baseboard Management Controller (BMC)

The system supports the Baseboard Management Controller (BMC). BMC is used to provide remote access, monitoring, and management. There are several BIOS settings that are related to BMC.

For general documentation and information on BMC, please visit our website at: https://www.supermicro.com/manuals/other/BMC_IPMI_X13_H13.pdf.

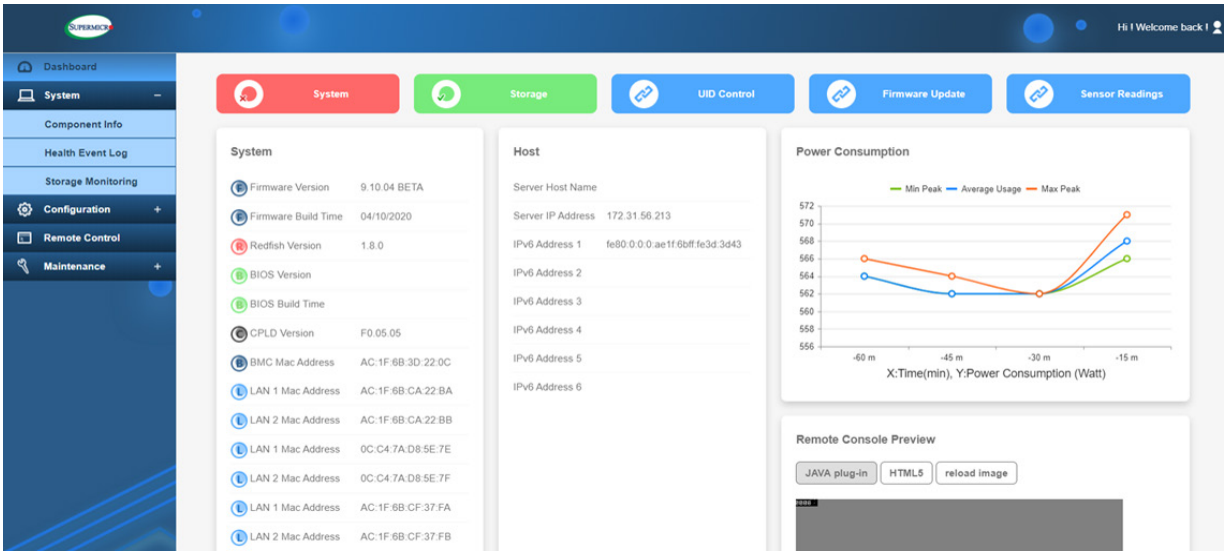

Figure 7-2. BMC Dashboard

7.3 Troubleshooting Procedures

Use the following procedures to troubleshoot your system. If you have followed all of the procedures below and still need assistance, refer to the 'Technical Support Procedures' and/or 'Returning Merchandise for Service' section(s) in this chapter. Always disconnect the AC power cord before adding, changing or installing any non hot-swap hardware components.

Before Power On

1. Check that the BMC_HB LED is blinking before the motherboard is turned on.
2. Check that the PWROK LED on the motherboard is on.
3. Make sure that the power connector is connected to your power supply.
4. Make sure that no short circuits exist between the motherboard and chassis.
5. Disconnect all cables from the motherboard, including those for the keyboard and mouse.
6. Remove all add-on cards.
7. Install a CPU, a heatsink*, and at least one DIMM on the motherboard. Check all jumper settings properly. *Make sure that the heatsink is fully seated.
8. Use the correct type of onboard CMOS battery (CR2032) as recommended by the manufacturer. To avoid possible explosion, do not install the CMOS battery upside down.

No Power

1. Make sure that no short circuits exist between the motherboard and the chassis.
2. Verify that all jumpers are set to their default positions.
3. Check that the 115 V/230 V switch on the power supply is properly set.
4. Turn the power switch on and off to test the system
5. The CMOS battery on your motherboard may be old. Check to verify that it still supplies approximately 3 VDC. If it does not, replace it with a new one.

No Video

1. Check that the VGA cable is connected properly, and the monitor is on.
2. Check if you follow the guidelines to install the memory module (see DIMM Module Population in Chapter 2).

3. Reseat the memory DIMM modules.

Note: If you are a system integrator, VAR or OEM, a POST diagnostics card is recommended.

System Boot Failure

If the system does not display POST (Power-On-Self-Test) or does not respond after the power is turned on, check the following:

4. Clear the CMOS settings by unplugging the power cord and contacting both pads on the CMOS Clear Jumper (JBT1).
5. Remove all components from the motherboard, especially the DIMM modules.
6. Turn on the system with only one DIMM module installed. If the system boots, check for bad DIMM modules or slots by following the Memory Errors Troubleshooting procedure in this Chapter.

Memory Errors

1. Make sure that the DIMM modules are properly and fully installed.
2. Confirm that you are using the correct memory. Also, it is recommended that you use the same memory type and speed for all DIMMs in the system. See Section 3.5 for memory details.
3. Check for bad DIMM modules or slots by swapping modules between slots and noting the results.
4. Check the power supply voltage 115 V/230 V switch.

The System Cannot Retain the Setup Configuration

1. Make sure that you are using a high quality power supply. A poor quality power supply may cause the system to lose the CMOS setup information. Refer to Section 3.12 for details on power supplies.
2. The battery on your motherboard may be old. Check to verify that it still supplies approximately 3 VDC. If it does not, replace it with a new one.
3. If the above steps do not fix the setup configuration problem, contact your vendor for repairs.

When the System Becomes Unstable

A. If the system becomes unstable during or after OS installation, check the following:

1. CPU/BIOS support: Make sure that your CPU is supported and that you have the latest BIOS installed in your system.

2. Memory support: Make sure that the memory modules are supported by testing the modules using memtest86 or a similar utility.

   Note: Refer to the product page on our website at http://www.supermicro.com for memory and CPU support and updates.

3. Storage support: Make sure that all storage drives work properly. Replace the bad drives with good ones.

4. System cooling: Check the system cooling to make sure that all heatsink fans and CPU/ system fans, etc., work properly. Check the hardware monitoring settings in the IPMI to make sure that the CPU and system temperatures are within the normal range. Also check the front panel Overheat LED and make sure that it is not on.

5. Adequate power supply: Make sure that the power supply provides adequate power to the system. Make sure that all power connectors are connected. Please refer to our website for more information on the minimum power requirements.

6. Proper software support: Make sure that the correct drivers are used.

B. If the system becomes unstable before or during OS installation, check the following:

1. Source of installation: Make sure that the devices used for installation are working properly, including boot devices such as USB flash or media drives.

2. Cable connection: Check to make sure that all cables are connected and working properly.

3. Using the minimum configuration for troubleshooting: Remove all unnecessary components (starting with add-on cards first), and use the minimum configuration (but with a CPU and a memory module installed) to identify the trouble areas. Refer to the steps listed in Section A above for proper troubleshooting procedures.

7.4 Crash Dump Using BMC

In the event of a processor internal error (IERR) that crashes your system, you may want to provide information to support staff. You can download a crash dump of status information using BMC. The BMC manual is available at https://www.supermicro.com/manuals/other/BMC_IPMI_X13_H13.pdf.

Check BMC Error Log

1. Access the BMC web interface.

2. Click the **Server Health** tab, then **Event Log** to verify an IERR error.

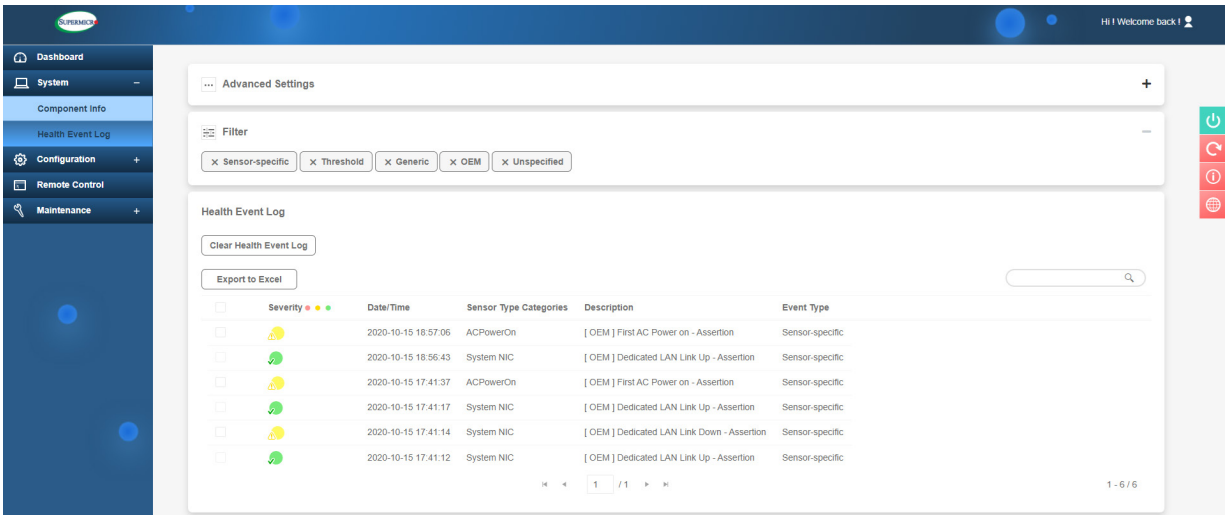

Figure 7-4. BMC Event Log

In the event of an IERR, the BMC executes a crash dump. You must download the crash dump and save it.

7.5 UEFI BIOS Recovery

Warning: Do not upgrade the BIOS unless your system has a BIOS-related issue. Flashing the wrong BIOS can cause irreparable damage to the system. In no event shall Supermicro be liable for direct, indirect, special, incidental, or consequential damages arising from a BIOS update. If you do update the BIOS, do not shut down or reset the system while the BIOS is updating to avoid possible boot failure.

Overview

The Unified Extensible Firmware Interface (UEFI) provides a software-based interface between the operating system and the platform firmware in the pre-boot environment. The UEFI specification supports an architecture-independent mechanism that will allow the UEFI OS loader stored in an add-on card to boot the system. The UEFI offers clean, hands-off management to a computer during system boot.

Recovering the UEFI BIOS Image

A UEFI BIOS flash chip consists of a recovery BIOS block and a main BIOS block (a main BIOS image). The recovery block contains critical BIOS codes, including memory detection and recovery codes for the user to flash a healthy BIOS image if the original main BIOS image is corrupted. When the system power is turned on, the recovery block codes execute first. Once this process is complete, the main BIOS code will continue with system initialization and the remaining POST (Power-On Self-Test) routines.

Note 1: Follow the BIOS recovery instructions below for BIOS recovery when the main BIOS block crashes.

Note 2: When the BIOS recovery block crashes, you will need to follow the procedures to make a Returned Merchandise Authorization (RMA) request. Also, you may use the Supermicro Update Manager (SUM) Out-of-Band (https://www.supermicro.com.tw/products/nfo/SMS_SUM.cfm) to reflash the BIOS.

Recovering the Main BIOS Block with a USB Device

This feature allows the user to recover the main BIOS image using a USB-attached device without additional utilities used. A USB flash device device can be used for this purpose. However, a USB Hard Disk drive cannot be used for BIOS recovery at this time.

The file system supported by the recovery block is FAT (including FAT12, FAT16, and FAT32) which is installed on a bootable or non-bootable USB-attached device. However, the BIOS might need several minutes to locate the SUPER.ROM file if the media size becomes too large due to the huge volumes of folders and files stored in the device.

To perform UEFI BIOS recovery using a USB-attached device, follow the instructions below.

1. Using a different machine, copy the "Super.ROM" binary image file into the Root "\" directory of a USB flash or media drive.

   Note 1: If you cannot locate the "Super.ROM" file in your drive disk, visit our website at www.supermicro.com to download the BIOS package. Extract the BIOS binary image into a USB flash device and rename it "Super.ROM" for the BIOS recovery use.

   Note 2: Before recovering the main BIOS image, confirm that the "Super.ROM" binary image file you download is the same version or a close version meant for your motherboard.

2. Insert the USB device that contains the new BIOS image ("Super.ROM") into your USB drive and reset the system when the following screen appears.

3. After locating the healthy BIOS binary image, the system will enter the BIOS Recovery menu as shown below.

Note: At this point, you may decide if you want to start the BIOS recovery. If you decide to proceed with BIOS recovery, follow the procedures below.

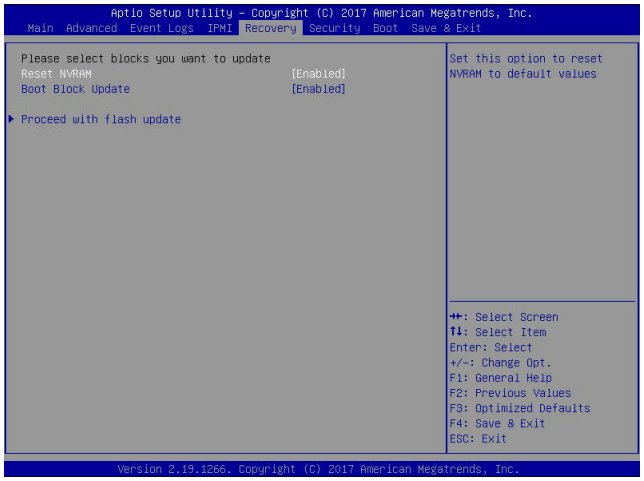

1. When the screen as shown above displays, use the arrow keys to select the item "Proceed with flash update" and press the <Enter> key. You will see the BIOS recovery progress as shown in the screen below.

   Note: *Do not interrupt the BIOS flashing process until it has completed*.

2. After the BIOS recovery process is complete, press any key to reboot the system.

3. Using a different system, extract the BIOS package into a USB flash drive.

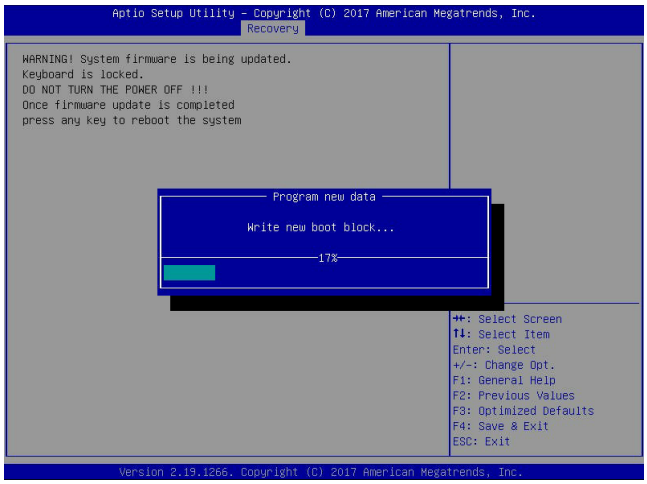

1. Press <Del> continuously during system boot to enter the BIOS Setup utility. From the top of the tool bar, select Boot to enter the submenu. From the submenu list, select Boot

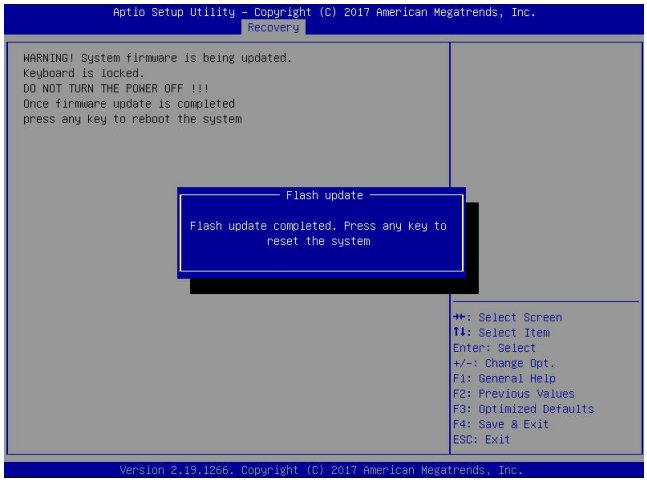

Option #1 as shown below. Then, set Boot Option #1 to [UEFI AP:UEFI: Built-in EFI Shell]. Press <F4> to save the settings and exit the BIOS Setup utility.

2. When the UEFI Shell prompt appears, type fs# to change the device directory path. Go to the directory that contains the BIOS package you extracted earlier from Step 6. Enter flash.nsh BIOSname.### at the prompt to start the BIOS update process.

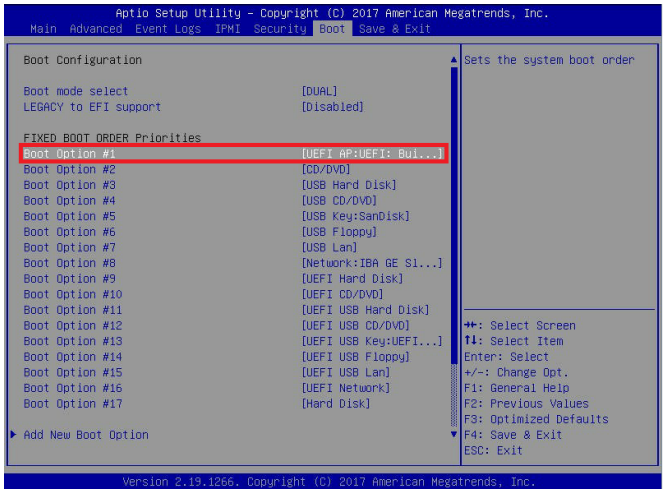

Note: *Do not interrupt this process* until the BIOS flashing is complete.

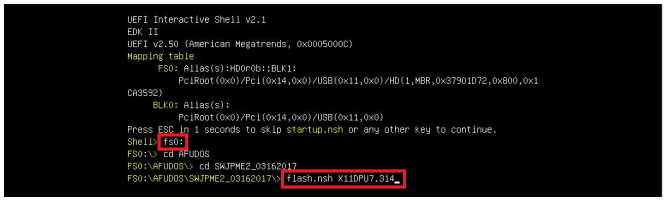

3. The screen above indicates that the BIOS update process is complete. When you see the screen above, unplug the AC power cable from the power supply, clear CMOS, and plug

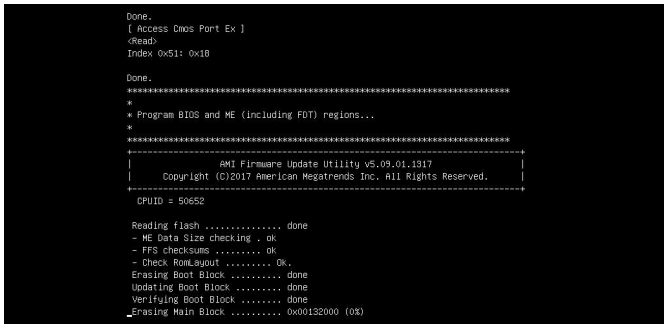

the AC power cable in the power supply again to power on the system.

4. Press <Del> continuously to enter the BIOS Setup utility.

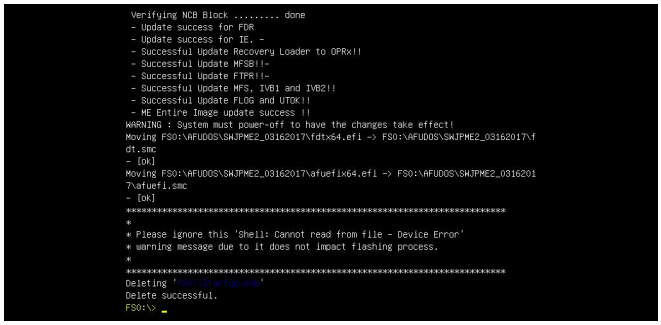

5. Press <F3> to load the default settings.

6. After loading the default settings, press <F4> to save the settings and exit the BIOS Setup utility.

7.6 CMOS Clear

JBT1 is used to clear CMOS, which will also clear any passwords. Instead of pins, this jumper consists of contact pads to prevent accidentally clearing the contents of CMOS.

To Clear CMOS

1. First power down the system completely.
2. Remove chassis cover to access the motherboard.
3. Remove the onboard battery from the motherboard.
4. Short the CMOS pads with a metal object such as a small screwdriver for at least four seconds.
5. Remove the screwdriver or shorting device.
6. Re-install the battery.
7. Replace the cover, reconnect the power cords and power on the system.

Notes: Clearing CMOS will also clear all passwords.

Do not use the PW_ON connector to clear CMOS.

JBT1 contact pads

7.7 Where to Get Replacement Components

If you need replacement parts for your system, to ensure the highest level of professional service and technical support, purchase exclusively from our Supermicro Authorized Distributors/System Integrators/Resellers. A list can be found at: http://www.supermicro.com. Click the "Where to Buy" tab.

7.8 BMC

The BMC can be reset using the button on the front control panel or on the chassis rear.

- Reset—Press and hold the button. After six seconds, the LED blinks at 2 Hz. The BMC resets and the reset duration is approximately 250 ms. Then the BMC starts to boot.
- Restore factory default configuration—Hold the button for twelve seconds. The LED blinks at 4 Hz while defaults are configured.
- Firmware update—the UID LED blinks at 10 Hz during a firmware update.

BMC Reset Options	
Event	**LED (Green)**
Reset	Blinks at 2 Hz
Restore Defaults	Blinks at 4 Hz
Update	Blinks at 10 Hz

7.9 Reporting an Issue

Technical Support Procedures

Before contacting Technical Support, please take the following steps. If your system was purchased through a distributor or reseller, please contact them for troubleshooting services. They have the best knowledge of your specific system configuration.

1. Please review the Troubleshooting Procedures in this manual and Frequently Asked Questions on our website before contacting Technical Support.

2. BIOS upgrades can be downloaded from our website. **Note**: Not all BIOS can be flashed depending on the modifications to the boot block code.

3. If you still cannot resolve the problem, include the following information when contacting us for technical support:

   - System, motherboard, and chassis model numbers and PCB revision number
   - BIOS release date/version (this can be seen on the initial display when your system first boots up)
   - System configuration

An example of a Technical Support form is posted on our website. Distributors: For immediate assistance, please have your account number ready when contacting our technical support department by email.

Returning Merchandise for Service

A receipt or copy of your invoice marked with the date of purchase is required before any warranty service will be rendered. You can obtain service by calling your vendor for a Returned Merchandise Authorization (RMA) number. When returning to the manufacturer, the RMA number should be prominently displayed on the outside of the shipping carton, and mailed prepaid or hand-carried. Shipping and handling charges will be applied for all orders that must be mailed when service is complete.

For faster service, RMA authorizations may be requested online (http://www.supermicro.com/support/rma/).

Whenever possible, repack the chassis in the original Supermicro carton, using the original packaging material. If these are no longer available, be sure to pack the chassis securely, using packaging material to surround the chassis so that it does not shift within the carton and become damaged during shipping.

This warranty only covers normal consumer use and does not cover damages incurred in shipping or from failure due to the alteration, misuse, abuse or improper maintenance of products.

During the warranty period, contact your distributor first for any product problems.

Vendor Support Filing System

For issues related to Intel, use the Intel IPS filing system:

https://www.intel.com/content/www/us/en/design/support/ips/training/welcome.html

For issues related to Red Hat Enterprise Linux, since it is a subscription based OS, contact your account representative.

7.10 Feedback

Supermicro values your feedback as we strive to improve our customer experience in all facets of our business. Please email us at techwriterteam@supermicro.com to provide feedback on our manuals.

Appendix A

Standardized Warning Statements for AC Systems

About Standardized Warning Statements

The following statements are industry standard warnings provided to alert the user of situations where potential bodily injury may occur. Should you have questions or experience difficulty, contact Supermicro's Technical Support department for assistance. Only certified technicians should attempt to install or configure components.

Read this appendix in its entirety before installing or configuring components in the Supermicro chassis.

These warnings may also be found on our website at http://www.supermicro.com/about/policies/safety_information.cfm.

Warning Definition

Warning! This warning symbol means danger. You are in a situation that could cause bodily injury. Before you work on any equipment, be aware of the hazards involved with electrical circuitry and be familiar with standard practices for preventing accidents.

警告の定義

この警告サインは危険を意味します。

人身事故につながる可能性がありますので、いずれの機器でも動作させる前に、

電気回路に含まれる危険性に注意して、標準的な事故防止策に精通して下さい。

此警告符号代表危险。

您正处于可能受到严重伤害的工作环境中。在您使用设备开始工作之前，必须充分意识到触电的危险，并熟练掌握防止事故发生的标准工作程序。请根据每项警告结尾的声明号码找到此设备的安全性警告说明的翻译文本。

此警告符號代表危險。

您正處於可能身體可能會受損傷的工作環境中。在您使用任何設備之前，請注意觸電的危險，並且要熟悉預防事故發生的標準工作程序。請依照每一注意事項後的號碼找到相關的翻譯說明內容。

Warnung

WICHTIGE SICHERHEITSHINWEISE

Dieses Warnsymbol bedeutet Gefahr. Sie befinden sich in einer Situation, die zu Verletzungen führen kann. Machen Sie sich vor der Arbeit mit Geräten mit den Gefahren elektrischer Schaltungen und den üblichen Verfahren zur Vorbeugung vor Unfällen vertraut. Suchen Sie mit der am Ende jeder Warnung angegebenen Anweisungsnummer nach der jeweiligen Übersetzung in den übersetzten Sicherheitshinweisen, die zusammen mit diesem Gerät ausgeliefert wurden.

BEWAHREN SIE DIESE HINWEISE GUT AUF.

INSTRUCCIONES IMPORTANTES DE SEGURIDAD

Este símbolo de aviso indica peligro. Existe riesgo para su integridad física. Antes de manipular cualquier equipo, considere los riesgos de la corriente eléctrica y familiarícese con los procedimientos estándar de prevención de accidentes. Al final de cada advertencia encontrará el número que le ayudará a encontrar el texto traducido en el apartado de traducciones que acompaña a este dispositivo.

GUARDE ESTAS INSTRUCCIONES.

IMPORTANTES INFORMATIONS DE SÉCURITÉ

Ce symbole d'avertissement indique un danger. Vous vous trouvez dans une situation pouvant entraîner des blessures ou des dommages corporels. Avant de travailler sur un équipement, soyez conscient des dangers liés aux circuits électriques et familiarisez-vous avec les procédures couramment utilisées pour éviter les accidents. Pour prendre connaissance des traductions des avertissements figurant dans les consignes de sécurité traduites qui accompagnent cet appareil, référez-vous au numéro de l'instruction situé à la fin de chaque avertissement.

CONSERVEZ CES INFORMATIONS.

תקנון הצהרות אזהרה

הצהרות הבאות הן אזהרות על פי תקני התעשייה, על מנת להזהיר את המשתמש מפני חבלה פיזית אפשרית. במידה ויש שאלות או היתקלות בבעיה כלשהי, יש ליצור קשר עם מחלקת תמיכה טכנית של סופרמיקרו. טכנאים מוסמכים בלבד רשאים להתקין או להגדיר את הרכיבים.

יש לקרוא את הנספח במלואו לפני התקנת או הגדרת הרכיבים במארזי סופרמיקרו.

ا كً ف حالة وٌكي أى تتسبب ف اصابة جسد ةٌ هذا الزهز عٌ خطز !تحذ زٌ .
قبل أى تعول على أي هعذات،كي على علن بالوخاطز ال أٌجوة عي الذوائز
الكهزبائ ةٍ
وكي على درا ةٌ بالووارسات البقائ ةٍ لو عٌ وقع أي حادث
استخذم رقن الب إِى الو صٌص ف هًا ةٌ كل تحذ زٌ للعثر تزجوتها

안전을 위한 주의사항

경고!

이 경고 기호는 위험이 있음을 알려 줍니다. 작업자의 신체에 부상을 야기 할 수 있는 상태에 있게 됩니다. 모든 장비에 대한 작업을 수행하기 전에 전기회로와 관련된 위험요소들을 확인하시고 사전에 사고를 방지할 수 있도록 표준 작업절차를 준수해 주시기 바랍니다.

해당 번역문을 찾기 위해 각 경고의 마지막 부분에 제공된 경고문 번호를 참조하십시오

BELANGRIJKE VEILIGHEIDSINSTRUCTIES

Dit waarschuwings symbool betekent gevaar. U verkeert in een situatie die lichamelijk letsel kan veroorzaken. Voordat u aan enige apparatuur gaat werken, dient u zich bewust te zijn van de bij een elektrische installatie betrokken risico's en dient u op de hoogte te zijn van de standaard procedures om ongelukken te voorkomen. Gebruik de nummers aan het eind van elke waarschuwing om deze te herleiden naar de desbetreffende locatie.

BEWAAR DEZE INSTRUCTIES

Installation Instructions

Warning! Read the installation instructions before connecting the system to the power source.

設置手順書

システムを電源に接続する前に、設置手順書をお読み下さい。

警告

将此系统连接电源前,请先阅读安装说明。

警告

將系統與電源連接前，請先閱讀安裝說明。

Warnung

Vor dem Anschließen des Systems an die Stromquelle die Installationsanweisungen lesen.

¡Advertencia!

Lea las instrucciones de instalación antes de conectar el sistema a la red de alimentación.

Attention

Avant de brancher le système sur la source d'alimentation, consulter les directives d'installation.

יש לקרוא את הוראות התקנה לפני חיבור המערכת למקור מתח.

اقر إرشادات التركيب قبل توصيل النظام إلى مصدر للطاقة

시스템을 전원에 연결하기 전에 설치 안내를 읽어주십시오.

Waarschuwing

Raadpleeg de installatie-instructies voordat u het systeem op de voedingsbron aansluit.

Circuit Breaker

Warning! This product relies on the building's installation for short-circuit (overcurrent) protection. Ensure that the protective device is rated not greater than: 250 V, 20 A.

サーキット・ブレーカー

この製品は、短絡（過電流）保護装置がある建物での設置を前提としています。

保護装置の定格が250 V、20 Aを超えないことを確認下さい。

警告

此产品的短路(过载电流)保护由建筑物的供电系统提供,确保短路保护设备的额定电流不大于250V,20A。

警告

此產品的短路(過載電流)保護由建築物的供電系統提供,確保短路保護設備的額定電流不大於250V,20A。

Warnung

Dieses Produkt ist darauf angewiesen, dass im Gebäude ein Kurzschluss- bzw. Überstromschutz installiert ist. Stellen Sie sicher, dass der Nennwert der Schutzvorrichtung nicht mehr als: 250 V, 20 A beträgt.

¡Advertencia!

Este equipo utiliza el sistema de protección contra cortocircuitos (o sobrecorrientes) del edificio. Asegúrese de que el dispositivo de protección no sea superior a: 250 V, 20 A.

Attention

Pour ce qui est de la protection contre les courts-circuits (surtension), ce produit dépend de l'installation électrique du local. Vérifiez que le courant nominal du dispositif de protection n'est pas supérieur à :250 V, 20 A.

מוצר זה מסתמך על הגנה המותקנת במבנים למניעת קצר חשמלי. יש לוודא כי
המכשיר המגן מפני הקצר החשמלי הוא לא יותר מ-250VDC, 20A

هذا المنتج يعتمد على معداث الحمايت مه الدوائرالقصيرة التي تم تثبيتها في
المبنى
تأكد من أن تقييم الجهاز الوقائي ليس أكثر من : 20A, 250V

경고!

이 제품은 전원의 단락(과전류)방지에 대해서 전적으로 건물의 관련 설비에 의존합니다.
보호장치의 정격이 반드시 250V(볼트), 20A(암페어)를 초과하지 않도록 해야 합니다.

Waarschuwing

Dit product is afhankelijk van de kortsluitbeveiliging (overspanning) van uw electrische installatie. Controleer of het beveiligde aparaat niet groter gedimensioneerd is dan 250V, 20A.

Power Disconnection Warning

Warning! The system must be disconnected from all sources of power and the power cord removed from the power supply module(s) before accessing the chassis interior to install or remove system components.

電源切断の警告

システムコンポーネントの取り付けまたは取り外しのために、シャーシー内部にアクセスするには、

システムの電源はすべてのソースから切断され、電源コードは電源モジュールから取り外す必要があります。

警告

在你打开机箱并安装或移除内部器件前,必须将系统完全断电,并移除电源线。

警告

在您打開機殼安裝或移除內部元件前，必須將系統完全斷電，並移除電源線。

Warnung

Das System muss von allen Quellen der Energie und vom Netzanschlusskabel getrennt sein, das von den Spg.Versorgungsteilmodulen entfernt wird, bevor es auf den Chassisinnenraum zurückgreift, um Systemsbestandteile anzubringen oder zu entfernen.

¡Advertencia!

El sistema debe ser disconnected de todas las fuentes de energía y del cable eléctrico quitado de los módulos de fuente de alimentación antes de tener acceso el interior del chasis para instalar o para quitar componentes de sistema.

Attention

Le système doit être débranché de toutes les sources de puissance ainsi que de son cordon d'alimentation secteur avant d'accéder à l'intérieur du chassis pour installer ou enlever des composants de systéme.

אזהרה מפני ניתוק חשמלי

!אזהרה

יש לנתק את המערכת מכל מקורות החשמל ויש להסיר את כבל החשמלי מהספק

.לפני גישה לחלק הפנימי של המארז לצורך התקנת או הסרת רכיבים

يجب فصم اننظاو من جميع مصادر انطاقت وإزانت سهك انكهرباء من وحدة امداد

انطاقت قبم

انصل إنى انمناطق انداخهيت نههيكم نتثبيج أو إزانت مكناث الجهاز

경고!

시스템에 부품들을 장착하거나 제거하기 위해서는 섀시 내부에 접근하기 전에 반드시 전원 공급장치로부터 연결되어있는 모든 전원과 전기코드를 분리해주어야 합니다.

Waarschuwing

Voordat u toegang neemt tot het binnenwerk van de behuizing voor het installeren of verwijderen van systeem onderdelen, dient u alle spanningsbronnen en alle stroomkabels aangesloten op de voeding(en) van de behuizing te verwijderen

Equipment Installation

Warning! Only trained and qualified personnel should be allowed to install, replace, or service this equipment.

機器の設置

トレーニングを受け認定された人だけがこの装置の設置、交換、またはサービスを許可されています。

警告

只有经过培训且具有资格的人员才能进行此设备的安装、更换和维修。

警告

只有經過受訓且具資格人員才可安裝、更換與維修此設備。

Warnung

Das Installieren, Ersetzen oder Bedienen dieser Ausrüstung sollte nur geschultem, qualifiziertem Personal gestattet werden.

¡Advertencia!

Solamente el personal calificado debe instalar, reemplazar o utilizar este equipo.

Attention

Il est vivement recommandé de confier l'installation, le remplacement et la maintenance de ces équipements à des personnels qualifiés et expérimentés.

אזהרה!

צוות מוסמך בלבד רשאי להתקין, להחליף את הציוד או לתת שירות עבור הציוד.

والمدربيه لتزكيب واستبدال أو خدمة هذا الجهاس يجب أن يسمح فقط للمنظفيه المؤهليه

경고!

훈련을 받고 공인된 기술자만이 이 장비의 설치, 교체 또는 서비스를 수행할 수 있습니다.

Waarschuwing

Deze apparatuur mag alleen worden geïnstalleerd, vervangen of hersteld door geschoold en gekwalificeerd personeel.

Restricted Area

Warning! This unit is intended for installation in restricted access areas. A restricted access area can be accessed only through the use of a special tool, lock and key, or other means of security. (This warning does not apply to workstations).

アクセス制限区域

このユニットは、アクセス制限区域に設置されることを想定しています。

アクセス制限区域は、特別なツール、鍵と錠前、その他のセキュリティの手段を用いてのみ出入りが可能です。

警告

此部件应安装在限制进出的场所，限制进出的场所指只能通过使用特殊工具、锁和钥匙或其它安全手段进出的场所。

警告

此裝置僅限安裝於進出管制區域，進出管制區域係指僅能以特殊工具、鎖頭及鑰匙或其他安全方式才能進入的區域。

Warnung

Diese Einheit ist zur Installation in Bereichen mit beschränktem Zutritt vorgesehen. Der Zutritt zu derartigen Bereichen ist nur mit einem Spezialwerkzeug, Schloss und Schlüssel oder einer sonstigen Sicherheitsvorkehrung möglich.

¡Advertencia!

Esta unidad ha sido diseñada para instalación en áreas de acceso restringido. Sólo puede obtenerse acceso a una de estas áreas mediante la utilización de una herramienta especial, cerradura con llave u otro medio de seguridad.

Attention

Cet appareil doit être installée dans des zones d'accès réservés. L'accès à une zone d'accès réservé n'est possible qu'en utilisant un outil spécial, un mécanisme de verrouillage et une clé, ou tout autre moyen de sécurité.

אזור עם גישה מוגבלת

אזהרה!

יש להתקין את היחידה באזורים שיש בהם הגבלת גישה. הגישה ניתנת בעזרת

'כלי אבטחה בלבד)מפתח, מנעול וכד.)

تخصيص هذه انحذة نترك بُها ف مناطق محظورة تم .

،مَكن انصبل إن منطقت محظورة فقط من خلال استخذاو أداة خاصت

أو أ وس هُت أخري نلالأمما قفم ومفتاح

경고!

이 장치는 접근이 제한된 구역에 설치하도록 되어있습니다. 특수도구, 잠금 장치 및 키, 또는 기타 보안 수단을 통해서만 접근 제한 구역에 들어갈 수 있습니다.

Waarschuwing

Dit apparaat is bedoeld voor installatie in gebieden met een beperkte toegang. Toegang tot dergelijke gebieden kunnen alleen verkregen worden door gebruik te maken van speciaal gereedschap, slot en sleutel of andere veiligheidsmaatregelen.

Battery Handling

Warning! There is the danger of explosion if the battery is replaced incorrectly. Replace the battery only with the same or equivalent type recommended by the manufacturer. Dispose of used batteries according to the manufacturer's instructions

電池の取り扱い

電池交換が正しく行われなかった場合、破裂の危険性があります。交換する電池はメーカーが推奨する型、または同等のものを使用下さい。使用済電池は製造元の指示に従って処分して下さい。

警告

电池更换不当会有爆炸危险。请只使用同类电池或制造商推荐的功能相当的电池更换原有电池。请按制造商的说明处理废旧电池。

警告

電池更換不當會有爆炸危險。請使用製造商建議之相同或功能相當的電池更換原有電池。請按照製造商的說明指示處理廢棄舊電池。

Warnung

Bei Einsetzen einer falschen Batterie besteht Explosionsgefahr. Ersetzen Sie die Batterie nur durch den gleichen oder vom Hersteller empfohlenen Batterietyp. Entsorgen Sie die benutzten Batterien nach den Anweisungen des Herstellers.

Attention

Danger d'explosion si la pile n'est pas remplacée correctement. Ne la remplacer que par une pile de type semblable ou équivalent, recommandée par le fabricant. Jeter les piles usagées conformément aux instructions du fabricant.

¡Advertencia!

Existe peligro de explosión si la batería se reemplaza de manera incorrecta. Reemplazar la batería exclusivamente con el mismo tipo o el equivalente recomendado por el fabricante. Desechar las baterías gastadas según las instrucciones del fabricante.

אזהרה!

קיימת סכנת פיצוץ של הסוללה במידה והוחלפה בדרך לא תקינה. יש להחליף

את הסוללה בסוג התואם מחברת יצרן מומלצת.

סילוק הסוללות המשומשות יש לבצע לפי הוראות היצרן.

هناك خطر من انفجار في حالة اسحبذال البطارية بطريقة غير صحيحة فعليل
اسحبذال البطارية
فقط بنفس النع أو ما يعادلها مما أوصث به الشرمة المصنعة
جخلص من البطاريات المسحعملة وفقا لحعليمات الشرمة الصانعة

경고!

배터리가 올바르게 교체되지 않으면 폭발의 위험이 있습니다. 기존 배터리와 동일하거나 제조사에서 권장하는 동등한 종류의 배터리로만 교체해야 합니다. 제조사의 안내에 따라 사용된 배터리를 처리하여 주십시오.

Waarschuwing

Er is ontploffingsgevaar indien de batterij verkeerd vervangen wordt. Vervang de batterij slechts met hetzelfde of een equivalent type die door de fabrikant aanbevolen wordt. Gebruikte batterijen dienen overeenkomstig fabrieksvoorschriften afgevoerd te worden.

Redundant Power Supplies

Warning! This unit might have more than one power supply connection. All connections must be removed to de-energize the unit.

冗長電源装置

このユニットは複数の電源装置が接続されている場合があります。

ユニットの電源を切るためには、すべての接続を取り外さなければなりません。

警告
此部件连接的电源可能不止一个，必须将所有电源断开才能停止给该部件供电。

警告
此裝置連接的電源可能不只一個，必須切斷所有電源才能停止對該裝置的供電。

Warnung

Dieses Gerät kann mehr als eine Stromzufuhr haben. Um sicherzustellen, dass der Einheit kein trom zugeführt wird, müssen alle Verbindungen entfernt werden.

¡Advertencia!

Puede que esta unidad tenga más de una conexión para fuentes de alimentación. Para cortar por completo el suministro de energía, deben desconectarse todas las conexiones.

Attention

Cette unité peut avoir plus d'une connexion d'alimentation. Pour supprimer toute tension et tout courant électrique de l'unité, toutes les connexions d'alimentation doivent être débranchées.

אם קיים יותר מספק אחד

אזהרה!

ליחדה יש יותר מחיבור אחד של ספק. יש להסיר את כל החיבורים על מנת לרוקן

את היחידה.

قد يكون لهذا الجهاز عدة اتصالات بوحدات امداد الطاقة .

يجب إزالة كافة الاتصالات لعسل الوحدة عن الكهرباء

경고!

이 장치에는 한 개 이상의 전원 공급 단자가 연결되어 있을 수 있습니다. 이 장치에 전원을 차단하기 위해서는 모든 연결 단자를 제거해야만 합니다.

Waarschuwing

Deze eenheid kan meer dan één stroomtoevoeraansluiting bevatten. Alle aansluitingen dienen verwijderd te worden om het apparaat stroomloos te maken.

Backplane Voltage

Warning! Hazardous voltage or energy is present on the backplane when the system is operating. Use caution when servicing.

バックプレーンの電圧

システムの稼働中は危険な電圧または電力が、バックプレーン上にかかっています。

修理する際には注意ください。

警告

当系统正在进行时，背板上有很危险的电压或能量，进行维修时务必小心。

警告

當系統正在進行時，背板上有危險的電壓或能量，進行維修時務必小心。

Warnung

Wenn das System in Betrieb ist, treten auf der Rückwandplatine gefährliche Spannungen oder Energien auf. Vorsicht bei der Wartung.

¡Advertencia!

Cuando el sistema está en funcionamiento, el voltaje del plano trasero es peligroso. Tenga cuidado cuando lo revise.

Attention

Lorsque le système est en fonctionnement, des tensions électriques circulent sur le fond de panier. Prendre des précautions lors de la maintenance.

מתח בפנל האחורי

אזהרה!

קיימת סכנת מתח בפנל האחורי בזמן תפעול המערכת. יש להיזהר במהלך העבודה.

هناك خطز مه التيار الكهزبائي أوالطاقة المجبدة على اللحة
عندما يكن النظام يعمل كه حذرا عند خدمة هذا الجهاس

경고!
시스템이 동작 중일 때 후면판 (Backplane)에는 위험한 전압이나 에너지가 발생 합니다.
서비스 작업 시 주의하십시오.

Waarschuwing
Een gevaarlijke spanning of energie is aanwezig op de backplane wanneer het systeem in gebruik is. Voorzichtigheid is geboden tijdens het onderhoud.

Comply with Local and National Electrical Codes

Warning! Installation of the equipment must comply with local and national electrical codes.

地方および国の電気規格に準拠

機器の取り付けはその地方および国の電気規格に準拠する必要があります。

警告

设备安装必须符合本地与本国电气法规。

警告

設備安裝必須符合本地與本國電氣法規。

Warnung
Die Installation der Geräte muss den Sicherheitsstandards entsprechen.

¡Advertencia!
La instalacion del equipo debe cumplir con las normas de electricidad locales y nacionales.

Attention
L'équipement doit être installé conformément aux normes électriques nationales et locales.

תיאום חוקי החשמל הארצי

אזהרה!

התקנת הציוד חייבת להיות תואמת לחוקי החשמל המקומיים והארציים.

تركيب المعدات الكهربائية يجب أن يمتثل للقاويه المحلية والبطية المتعلقة بالكهرباء

경고!

현 지역 및 국가의 전기 규정에 따라 장비를 설치해야 합니다.

Waarschuwing

Bij installatie van de apparatuur moet worden voldaan aan de lokale en nationale elektriciteitsvoorschriften.

Product Disposal

Warning! Ultimate disposal of this product should be handled according to all national laws and regulations.

製品の廃棄

この製品を廃棄処分する場合、国の関係する全ての法律・条例に従い処理する必要があります。

警告

本产品的废弃处理应根据所有国家的法律和规章进行。

警告

本產品的廢棄處理應根據所有國家的法律和規章進行。

Warnung

Die Entsorgung dieses Produkts sollte gemäß allen Bestimmungen und Gesetzen des Landes erfolgen.

¡Advertencia!

Al deshacerse por completo de este producto debe seguir todas las leyes y reglamentos nacionales.

Attention

La mise au rebut ou le recyclage de ce produit sont généralement soumis à des lois et/ou directives de respect de l'environnement. Renseignez-vous auprès de l'organisme compétent.

סילוק המוצר

אזהרה!

סילוק סופי של מוצר זה חייב להיות בהתאם להנחיות וחוקי המדינה.

التخلص النهائي من هذا المنتج ينبغي التعامل معه وفقا لجميع القانين واللائح البطنية عند

경고!

이 제품은 해당 국가의 관련 법규 및 규정에 따라 폐기되어야 합니다.

Waarschuwing

De uiteindelijke verwijdering van dit product dient te geschieden in overeenstemming met alle nationale wetten en reglementen.

Hot Swap Fan Warning

Warning! Hazardous moving parts. Keep away from moving fan blades. The fans might still be turning when you remove the fan assembly from the chassis. Keep fingers, screwdrivers, and other objects away from the openings in the fan assembly's housing.

ファン・ホットスワップの警告

警告！回転部品に注意。運転中は回転部(羽根)に触れないでください。シャーシから冷却ファン装置を取り外した際、ファンがまだ回転している可能性があります。ファンの開口部に、指、ドライバー、およびその他のものを近づけないで下さい。

警告!

警告！危险的可移动性零件。请务必与转动的风扇叶片保持距离。 当您从机架移除风扇装置，风扇可能仍在转动。小心不要将手指、螺丝起子和其他物品太靠近风扇

警告

危險的可移動性零件。請務必與轉動的風扇葉片保持距離。 當您從機架移除風扇裝置，風扇可能仍在轉動。小心不要將手指、螺絲起子和其他物品太靠近風扇。

Warnung

Gefährlich Bewegende Teile. Von den bewegenden Lüfterblätter fern halten. Die Lüfter drehen sich u. U. noch, wenn die Lüfterbaugruppe aus dem Chassis genommen wird. Halten Sie Finger, Schraubendreher und andere Gegenstände von den Öffnungen des Lüftergehäuses entfernt.

¡Advertencia!

Riesgo de piezas móviles. Mantener alejado de las aspas del ventilador. Los ventiladores podran dar vuelta cuando usted quite ell montaje del ventilador del chasis. Mandtenga los dedos, los destornilladores y todos los objetos lejos de las aberturas del ventilador

Attention

Pieces mobiles dangereuses. Se tenir a l'ecart des lames du ventilateur Il est possible que les ventilateurs soient toujours en rotation lorsque vous retirerez le bloc ventilateur du châssis. Prenez garde à ce que doigts, tournevis et autres objets soient éloignés du logement du bloc ventilateur.

אזהרה!

חלקים נעים מסוכנים. התרחק מלהבי המאוורר בפעולהכאשר מסירים את חלקי
המאוורר מהמארז, יתכן והמאוורר עדיין עובדים. יש להרחיק למרחק בטוח את
האצבעות וכלי עבודה שונים מהפתחים בתוך המאוורר

تحذير! أجزاء متحركة خطرة. ابتعد عن شفرات المروحة المتحركة.من الممكن أن
المراوح لا تزال تدورعند إزالة كتلة المروحة من الهيكل يجب إبقاء الأصابع
.ومفكات البراغي وغيرها من الأشياء بعيدا عن الفتحات في كتلة المروحة

경고!

움직이는 위험한 부품. 회전하는 송풍 날개에 접근하지 마세요. 섀시로부터 팬 조립품을 제거할 때 팬은 여전히 회전하고 있을 수 있습니다. 팬 조림품 외관의 열려있는 부분들로부터 손가락 및 스크류드라이버, 다른 물체들이 가까이 하지 않도록 배치해 주십시오.

Waarschuwing

Gevaarlijk bewegende onderdelen. Houd voldoende afstand tot de bewegende ventilatorbladen. Het is mogelijk dat de ventilator nog draait tijdens het verwijderen van het ventilatorsamenstel uit het chassis. Houd uw vingers, schroevendraaiers en eventuele andere voorwerpen uit de buurt van de openingen in de ventilatorbehuizing.

Power Cable and AC Adapter

Warning! When installing the product, use the provided or designated connection cables, power cables and AC adaptors. Using any other cables and adaptors could cause a malfunction or a fire. Electrical Appliance and Material Safety Law prohibits the use of UL or CSA -certified cables (that have UL/CSA shown on the cord) for any other electrical devices than products designated by Supermicro only.

電源コードとACアダプター

製品を設置する場合、提供または指定および購入された接続ケーブル、電源コードとACアダプターを 該当する地域の条例や安全基準に適合するコードサイズやプラグと共に使用下さい。他のケーブルやアダプタを使用すると故障や火災の原因になることがあります。

電気用品安全法は、ULまたはCSA認定のケーブル(UL/CSAマークがコードに表記)を Supermicro が指定する製品以外に使用することを禁止しています。

警告

安装此产品时,请使用本身提供的或指定的或采购的连接线,电源线和电源适配器，包含遵照当地法规和安全要求的合规的电源线尺寸和插头.使用其它线材或适配器可能会引起故障或火灾。
除了Supermicro所指定的产品,电气用品和材料安全法律规定禁止
使用未经UL或CSA认证的线材。(线材上会显示UL/CSA符号)。

警告

安裝此產品時,請使用本身提供的或指定的或採購的連接線,電源線和電源適配器，包含遵照當地法規和安全要求的合規的電源線尺寸和插頭.使用其它線材或適配器可能會引起故障或火災。
除了Supermicro所指定的產品,電氣用品和材料安全法律規定禁止
使用未經UL或CSA認證的線材。 (線材上會顯示UL/CSA符號)。

Warnung

Nutzen Sie beim Installieren des Produkts ausschließlich die von uns zur Verfügung gestellten Verbindungskabeln, Stromkabeln und/oder Adapater, die Ihre örtlichen Sicherheitsstandards einhalten. Der Gebrauch von anderen Kabeln und Adapter können Fehlfunktionen oder Feuer verursachen. Die Richtlinien untersagen das Nutzen von UL oder CAS zertifizierten Kabeln (mit UL/CSA gekennzeichnet), an Geräten oder Produkten die nicht mit Supermicro gekennzeichnet sind.

¡Advertencia!

Cuando instale el producto, utilice la conexión provista o designada o procure cables, Cables de alimentación y adaptadores de CA que cumplan con los códigos locales y los requisitos de seguridad, incluyendo el tamaño adecuado del cable y el enchufe. El uso de otros cables y adaptadores podría causar un mal funcionamiento o un incendio. La Ley de Seguridad de Aparatos Eléctricos y de Materiales prohíbe El uso de cables certificados por UL o CSA (que tienen el certificado UL / CSA en el código) para cualquier otros dispositivos eléctricos que los productos designados únicamente por Supermicro.

Attention

Lors de l'installation du produit, utilisez les cables de connection fournis ou désigné ou achetez des cables, cables de puissance et adaptateurs respectant les normes locales et les conditions de securite y compris les tailles de cables et les prises electriques appropries. L'utilisation d'autres cables et adaptateurs peut provoquer un dysfonctionnement ou un incendie. Appareils électroménagers et la Loi sur la Sécurité Matériel interdit l'utilisation de câbles certifies- UL ou CSA (qui ont UL ou CSA indiqué sur le code) pour tous les autres appareils électriques sauf les produits désignés par Supermicro seulement.

AC ימאתמו ם״ילמשח ם״ילבכ

!הרהזא

ך״רוצל ומאתוה וא ושכרנ רשא AC ם״ימאתמו ם״יקפס, ם״ילבכב שמתשהל שי, רצומה תא ם״יניקתמ רשאכ לכב שומיש . עקתהו לבכה לש הנוכנ הדימ ללוכ, תוימוקמה תוחיטבה תושירדל ומאתוה רשאו, הנקתהה למשחה יר״ישכמב שומישה יקוחל ם״אתהב. ילמשח רצק וא הלקתל ם״ורגל לולע, רחא גוסמ ם״אתמ וא לבכ לש דוק ם״הילע עיפומ רשאכ) CSA-ב וא UL -ב ם״יכמסומה ם״ילבכב שמתשהל רוסיא ם״ייק, תוחיטבה יקוחו .דבלב Supermicro י"ע ם״אתוה רשא רצומב קר אלא, רחא ילמשח רצומ לכ רובע UL/CSA)

عند تركيب المنتج، قم باستخدام التوصيلات المتوفرة أو المحددة أو قم بشراء الكابلات الكهربائية ومحولات التيار المتردد مع الالتزام بقوانين ومتطلبات السلامة المحلية بما في ذلك حجم الموصل والقابس السليم. استخدام أي كابلات ومحولات أخرى قد يتسبب في عطل أو حريق. يحظر قانون السلامة للأجهزة الكهربائية والمعدات استخدام الكابلات المعتمدة من قبل UL أو CSA والتي تحمل علامة (UL/CSA) مع أي معدات أخرى غير المنتجات المعينة والمحددة من قبل Supermicro.

전원 케이블 및 AC 어댑터

경고! 제품을 설치할 때 현지 코드 및 적절한 굵기의 코드와 플러그를 포함한 안전 요구 사항을 준수하여 제공되거나 지정된 연결 혹은 구매 케이블, 전원 케이블 및 AC 어댑터를 사용하십시오.

다른 케이블이나 어댑터를 사용하면 오작동이나 화재가 발생할 수 있습니다. 전기 용품 안전법은 UL 또는 CSA 인증 케이블 (코드에 UL / CSA가 표시된 케이블)을 Supermicro 가 지정한 제품 이외의 전기 장치에 사용하는 것을 금지합니다.

Stroomkabel en AC-Adapter

Waarschuwing! Bij het aansluiten van het Product uitsluitend gebruik maken van de geleverde Kabels of een andere geschikte aan te schaffen Aansluitmethode, deze moet altijd voldoen aan de lokale voorschriften en veiligheidsnormen, inclusief de juiste kabeldikte en stekker. Het gebruik van niet geschikte Kabels en/of Adapters kan een storing of brand veroorzaken. Wetgeving voor Elektrische apparatuur en Materiaalveiligheid verbied het gebruik van UL of CSA -gecertificeerde Kabels (met UL/CSA in de code) voor elke andere toepassing dan de door Supermicro hiervoor beoogde Producten.

Appendix B

System Specifications

Processors
Single AMD EPYC™ 9004/9005 (motherboard revision 2.0 or later is required) Series processor in SP5 socket and a Thermal Design Power (TDP) unit up to 500 W* (BIOS v3.4 or later is required) (*Depending on thermal validation and system configuration. Contact a Supermicro representative for details.)
Chipset
System on Chip
BIOS
• 256Mb SPI AMI BIOS® SM Flash UEFI BIOS • ACPI 6.4, SMBIOS 3.5.0, Plug-and-Play (PnP), RTC (Real Time Clock) wakeup, Riser Card Auto-Detection Support
Memory
24 DIMM slots with 2DPC that support up to 6 TB of ECC DDR5 RDIMM at 4000 MT/s(1R)/3600MT/s(2R/3DS) (9004 Series CPU) 6 TB of ECC DDR5 RDIMM at 4400 MT/s(1R)/4000MT/s(2R/3DS) (MB Rev. 2.00 or later is required and 9005 Series CPU only) -or- 12 DIMM slots with 1DPC that support up to 3 TB of ECC DDR5 RDIMM at 4800 MT/s (9004 Series CPU) 3 TB of ECC DDR5 RDIMM at 5200 MT/s (MB Rev. 2.00 or later is required and 9005 Series CPU only) For details, please refer to Section 3.4
Storage Drives
24 hot-swap 2.5" NVMe/SAS/SATA drives (additional components are needed to enable the drive options) Two M.2 NVMe PCIe (one PCIe Gen3 x4 + one PCIe Gen3 x2) in the 2280 and 22110 (default) form factors for boot drive
PCI Expansion Slots
For 24 SATA/SAS and 16 SATA/SAS configuration options for up to: Four PCIe 5.0 x16 slots or Eight PCIe 5.0 x8 slots or Three PCIe 5.0 x16 slots + two PCIe 5.0 x8 slots or Two PCIe 5.0 x16 slots + four PCIe 5.0 x8 slots or One PCIe 5.0 x16 slot + six PCIe 5.0 x8 slots For 20 NVMe configuration options for up to: Two PCIe 5.0 x16 slot or four PCIe 5.0 x8 slots
Input/Output
One AIOM slot for flexible networking (OCP 3.0 compatible) One RJ45 dedicated BMC LAN port Two rear USB 3.2 Gen1 ports One VGA port
Motherboard
H13SSH; 17.0" (W) x 11.5" (L) (431.8 mm x 292.1 mm)
Chassis
CSE-HS219-R1K63P-A; 2U Rackmount, 3.5 x 17.2 x 29.9 in / 88.9 x 437 x 760 mm (HxWxD)

System Cooling
Four 8-cm heavy duty fans with optimal fan speed control One air shroud
Power Supply
Model: PWS-1K63A-1R, 1600W redundant modules, 80Plus Titanium level* * Full redundancy based on configuration and application load AC Input 1000W: 100-127Vac / 12A-9A / 50-60Hz 1600W: 200-240Vac / 9A-7.5A / 50-60Hz +12V Max: 83.3A / Min: 0A (100Vac-127Vac) Max: 133.3A / Min: 0A (200Vac-240Vac) 12V SB Max: 3.5A / Min: 0A
Operating Environment
Operating Temperature: 10º to 35º C (50º to 95º F)* Non-operating Temperature: -40º to 70º C (-40º to 158º F) Operating Relative Humidity: 8% to 90% (non-condensing) Non-operating Relative Humidity: 5% to 95% (non-condensing) * Operating Temperature based on configurations
Regulatory Compliance
FCC, ICES, CE, UKCA, VCCI, RCM, NRTL, CB
Applied Directives, Standards

この装置は、クラスＡ機器です。この装置を住宅環境で使用すると電波妨害を引き起こすことがあります。この場合には使用者が適切な対策を講ずるよう要求されることがあります。

VCCI ー A